SWISSDOOR
DØRTEKNIK FOR PROFESSIONELLE

ECO

COMPENDIUM 2011

■ SYSTEM TECHNOLOGY FOR THE DOOR

Printed on paper bleached without chlorine. Subject to technical changes.
Art. No.: 10999171; 03/2011/F

Swissdoor ApS • Stenhuggervej 2 • 5471 Søndersø • Danmark Telefon +45 86 28 00 00 • mail@swissdoor.dk • www.swissdoor.dk

All previous ECO Schulte GmbH & Co. KG catalogues for all product groups lose their validity with the publication of the ECO Compendium.

This overall catalogue provides an overview of our entire programme and helps to find articles quickly, along with their dimensions and other useful information. You will find more detailed information in the ECO gross price lists, in the data sheets on each article and in the internet under **www.eco-schulte.de**.

All information on materials, surfaces, dimensions and article numbers has been compiled conscientiously and complies with the state of the art. No legal claims can be derived from any erroneous information given, however, including printing errors. All measurements are listed in millimetres. Binding dimensions on request.

All listed or depicted information on products and their dimensions and features was valid on the day of printing. We reserve the right to make changes which serve technical progress and further development. Model and product claims cannot be asserted. Improper use or unauthorized alteration of our products release us from all obligations in the event of damage.

All deliveries are made in accordance with our General Terms of Sale and Delivery which you will find in the actual gross price list and on page 634 of this overall catalogue.

Imprint

ECO Schulte GmbH & Co. KG
Iserlohner Landstraße 89
D-58706 Menden

Phone +49 2373 9276-0
Fax +49 2373 9276-40

E-Mail: info@eco-schulte.de
Internet: **www.eco-schulte.de**

© 2011 ECO Schulte GmbH & Co. KG
All rights reserved. The reproduction, modification and replication of all kinds of this text, either in whole or in part, are prohibited without our written consent.

The ECO Schulte Product Range

The ECO Schulte World

About our History ..... Page 8
About our Family ..... Page 10
About our Standards ..... Page 13
About our References ..... Page 14
About our Locations ..... Page 16
The ECO Schulte World ..... Page 18

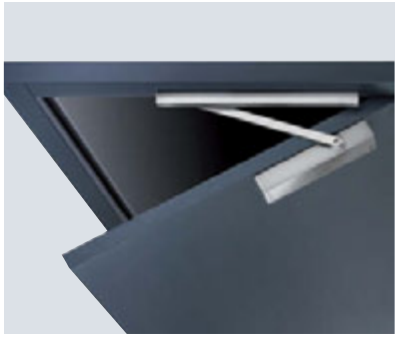

ECO Schulte Door Closer Technology

About the Product ..... Page 26
Overview of Contents ..... Page 33
ECO Door Closer Technology ..... Page 36

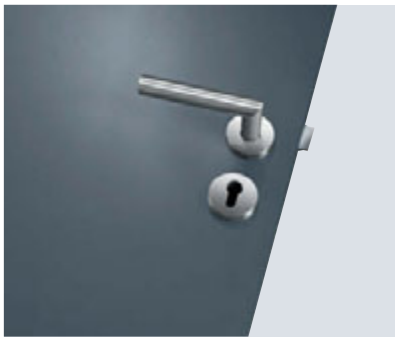

ECO Schulte Handles Technology

About the Product ..... Page 184
Overview of Contents ..... Page 194
ECO Handles Technology ..... Page 198

ECO Handles Technology
Hardware for Sanitary Partitions ..... Page 347

Swissdoor ApS • Stenhuggervej 2 • 5471 Søndersø • Danmark Telefon +45 86 28 00 00 • mail@swissdoor.dk • www.swissdoor.dk

ECO **Schulte Panic, Lock and Bolting Technology**

About the Product ..... Page 379
Overview of Contents ..... Page 388
ECO Panic, Lock and Bolting Technology ..... Page 394

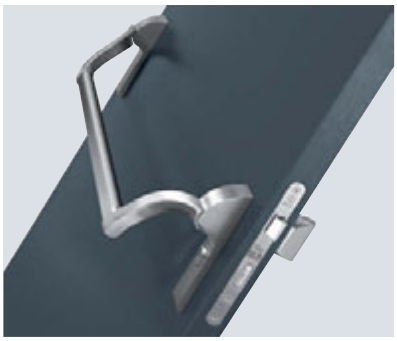

ECO **Schulte Hinge Technology**

About the Product ..... Page 517
Overview of Contents ..... Page 524
ECO Hinge Technology ..... Page 529

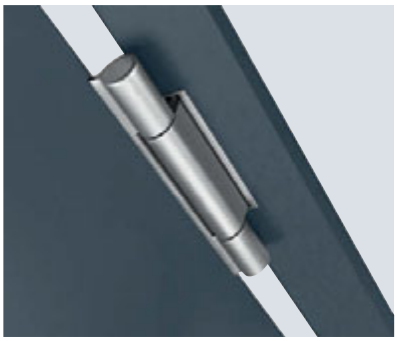

ECO **Schulte Glass Door Technology**

About the Product ..... Page 593
Overview of Contents ..... Page 596
ECO Glass Door Technology ..... Page 598

ECO **Schulte General Information**

Care Notes..... Page 630
General Terms of Sale..... Page 634
Product Liability ..... Page 636
Keyword Index ..... Page 639

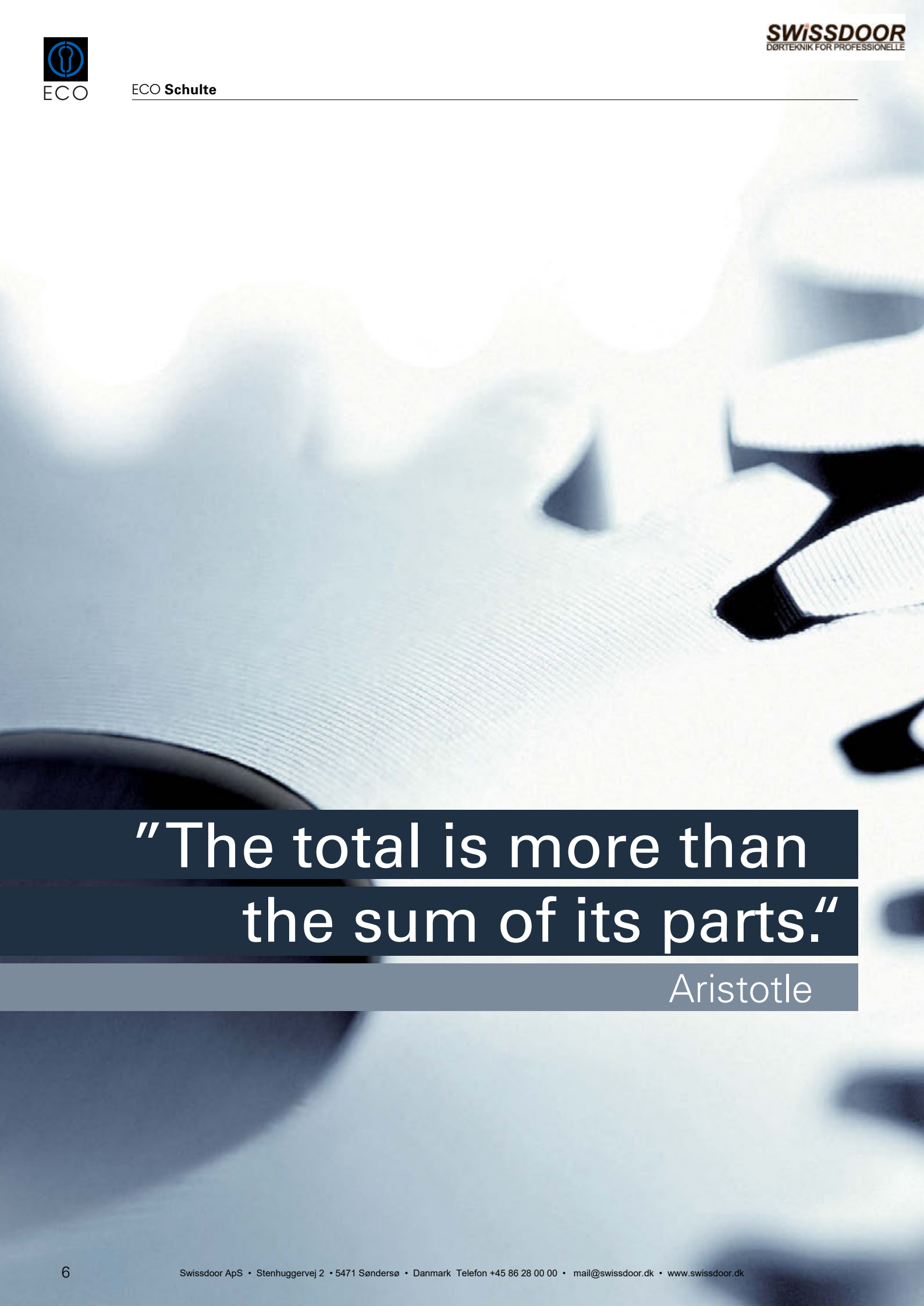

”The total is more than the sum of its parts.“

Aristotle

The essence of a door is security

The Origins

ECO Schulte has its roots as a family business at the edge of the Ruhr district in the Sauerland region. The mineral deposits to be found here, the steel industry and the Industrial Revolution have produced many industrial enterprises, from global groups of companies to innovative medium-sized businesses which developed their international activities.

1986

Today

Skilful entrepreneurs and a self-assured workforce have enabled this stretch of land to develop into the most highly industrialized region in the world. In the pioneer days of the 1920s, Echt & Co started up as a metal-working business in the Westphalian town of Menden. Echt & Co. later became ECO. The Co., which stood for the co-partner in the business, was the Schulte family whose name has since been incorporated into the company's current name, ECO Schulte. This family business with a long tradition set itself the task of redefining the system technology of doors. The palette of manufacturing technologies used by ECO soon ranged from stamping and shaping to metal casting and this was to become the cornerstone of the company's subsequent specialization in door fittings. This is where the founder family and the company acquired the specialized skills and knowledge which ECO Schulte has nurtured and further developed to the present day: we know about metal in all of its shapes and forms. And about doors.

The Idea

Doors and windows are the basic functional elements of a house. Handles allow you to operate them as desired. The company's idea right from the start was standardization - all of the technology involved in a door from a single source. The simple fact here is that only the ideal interplay of all parts of the fittings can ensure that the door functions properly in all situations and conditions. The perfect final result can only be defined from within the system. A door has the function of restricting access to a specific area to authorized individuals. Doors must be able to deny access to trespassers, while ensuring at the same time that a house can be vacated safely at all times, in the event of fire, for instance. This is where the requirements are reversed; the door may no longer constitute an obstacle. We recognized at a very early stage that the essence of a door is safety and security, which are inseparable. They cannot be split into locks and hinges, latches and handles - a solution from a single source guarantees the best functionality.

Fire Protection Doors

The company started to produce fittings and hinges for fire protection doors in the 1960s. One of the first products was nylon fittings with a steel core. Using this as the basis, ECO continually expanded its range of door fittings. The uniform approach to lock, fittings, closer and hinge technology soon made ECO one of the most important development partners for the door industry. ECO Schulte demonstrates its traditional processing know-how with doors by combining modern materials with galvanized steel. Handles for fire protection doors remain essential products in the ECO range to this day.

Swissdoor ApS • Stenhuggervej 2 • 5471 Søndersø • Danmark Telefon +45 86 28 00 00 • mail@swissdoor.dk • www.swissdoor.dk

International Expansion and Growth

The company adopts its current name ECO Schulte in 1972. ECO Schulte GmbH & Co. KG prospers – the boss is Ernst Schulte and he is convinced of the idea of system technology for doors - from a single source. The hinges and fittings come from the main production site in Menden. Specialized knowledge is gained in 1989 with the acquisition of the GBS (Gebrüder Betz, Schwelm) lock factory and integrated into the production process in Menden. High-quality mortise locks and bolting technology for steel, wood and profile doors have been developed and manufactured here ever since, from series products to panic locks and bar handles for escape route solutions. The main production site in Menden is the development, production, assembly and administration centre of the group of companies.

ECO Schulte Headquarters in Menden

ECO Schulte in Luckenwalde: ESB

ECO Schulte founded its subsidiary ESB in Luckenwalde near Berlin in the 1980s. This production site is dedicated to stamping and forming technology. Plastic parts are processed here and a highly regarded laser welding technique is used for the manufacture of high-quality door hinges.

ECO supplies the emerging Asian markets directly from China, where the company operates its own factory and logistics centre. Together with other European distribution companies and global marketing partners, the ECO brand has built up an international distribution and service network in the course of the last decades.

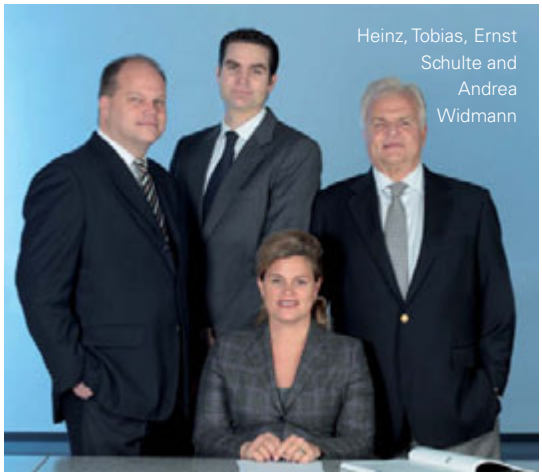
Heinz, Tobias, Ernst Schulte and Andrea Widmann

The family business is geared to the future: Ernst Schulte, the founder of the group, continues to contribute his experience, ideas and extensive knowledge to the business. He maintains traditions while promoting and demanding innovation. The line of succession has been agreed within the family business: Schulte's daughter Andrea Widmann and his sons Heinz and Tobias are steering the company into the third generation as the managing partners.

"The Door is a System"

Doors turn architecture into something that people can use – hardly any other functional element of a building is used more intensively every day than the door. Because ECO **Schulte is a system provider for all aspects of doors, it is one of a very few companies that have virtually all of the technological solutions at their fingertips which make doors useful and practicable. An interview with Ernst Schulte, founder of the** ECO **Schulte group, and his sons and co-directors Heinz and Tobias.**

Ernst Schulte, founder of the ECO Schulte group of companies.

When you are asked what benefits your products produce, what is your answer?

Ernst Schulte: You can bring this down to one simple basic principle: what we sell is in essence safety and security. Our products make doors movable, thus making it possible to control access. Door system technology has to ensure that only authorized persons are allowed in but that all people can get out in an emergency.

Heinz Schulte: There are more or less basic fittings that come with every door. These include the hinges, which give the door leaf an axis, the handle and the lock. These are the basic fittings as we have always known them. The functional reliability of these parts over many years ensures that human lives and property are protected inside the building. Essentially, there are two concepts which make these basic fittings even more reliable. The first is a door closer which closes doors securely so that they can separate different fire compartments in the event of a fire. The second is the panic opener, which ensures in several different ways that it is always possible to get out of a building in an emergency.

And why is the overall door system solution so important in your opinion?

Ernst Schulte: It goes without saying that the components of a system that has to save lives in an emergency should be perfectly matched with one another. The failure of one single link in the function chain can be fatal. Or to put it another way: if the system is perfectly matched, additional safety potential is created. The whole is more than the sum of its parts, as

Swissdoor ApS • Stenhuggervej 2 • 5471 Søndersø • Danmark Telefon +45 86 28 00 00 • mail@swissdoor.dk • www.swissdoor.dk

Tobias Schulte

we all know. We also cooperate closely with the door manufacturers, because ultimately it's the doors that are the central element of the system.

Tobias Schulte: With a service life of roughly 20 years, a door system in a hospital has to withstand an awful lot. A large number of opening and closing cycles not only takes its toll on the door closer but also on the hinges and latch. We try to make it clear to our customers that safety and security are inseparable within the overall concept of a door: a poor-quality component can disrupt the system and cost human lives.

You are successful all over the world with German technology – what's the essential aspect in the export markets of the world where doors are concerned

Tobias Schulte: Our technology enjoys a very good reputation internationally and the entire industry here lives from this. This country is successful in the export of technology and know-how – from engineering projects to architecture. My experience has been that a convincing idea like our "All aspects of the door" concept is valued and appreciated in many markets. Along with the fact of course that we ensure the full range of functions of the door with our products, which makes us the only point of contact from the planning stage all the way through to the end of the service life of the system.

Ernst Schulte: German branded goods are also linked with another important idea: standards. Compliance with international standards is akin to a sacred conformity and quality promise at ECO Schulte that we build into every product. This produces reliability with planners and processors: by using products that comply with standards, our customers, planners and architects reduce their liability risk in the event of damage or other problems. It is regrettable that the documented compliance with standards is not a matter of course internationally.

You are the manufacturer of standardized high-quality solutions - and products which serve us silently and reliably for decades. Is any leeway for innovation possible within the strict confines of the standards?

Ernst Schulte: The former General Secretary of ISO, Christian Favre, once said that although Concert A has been set at 440 vibrations per second, the possibilities open to music are still unlimited. More or less the same thing applies to the system technology in doors. We have produced many creative solutions within the confines of the standards.

Heinz Schulte: When I walk around a building fitted with ECO Schulte system technology, I know that the doors won't constitute an obstacle for me if a fire breaks out. We are here to produce a feeling of safety and security and not one of anxiety. You can believe me that our products are quite happy to play the role of the dumb waiter who provides reliable service over many years. We are pleased to give others the task of spreading anxiety.

Heinz Schulte

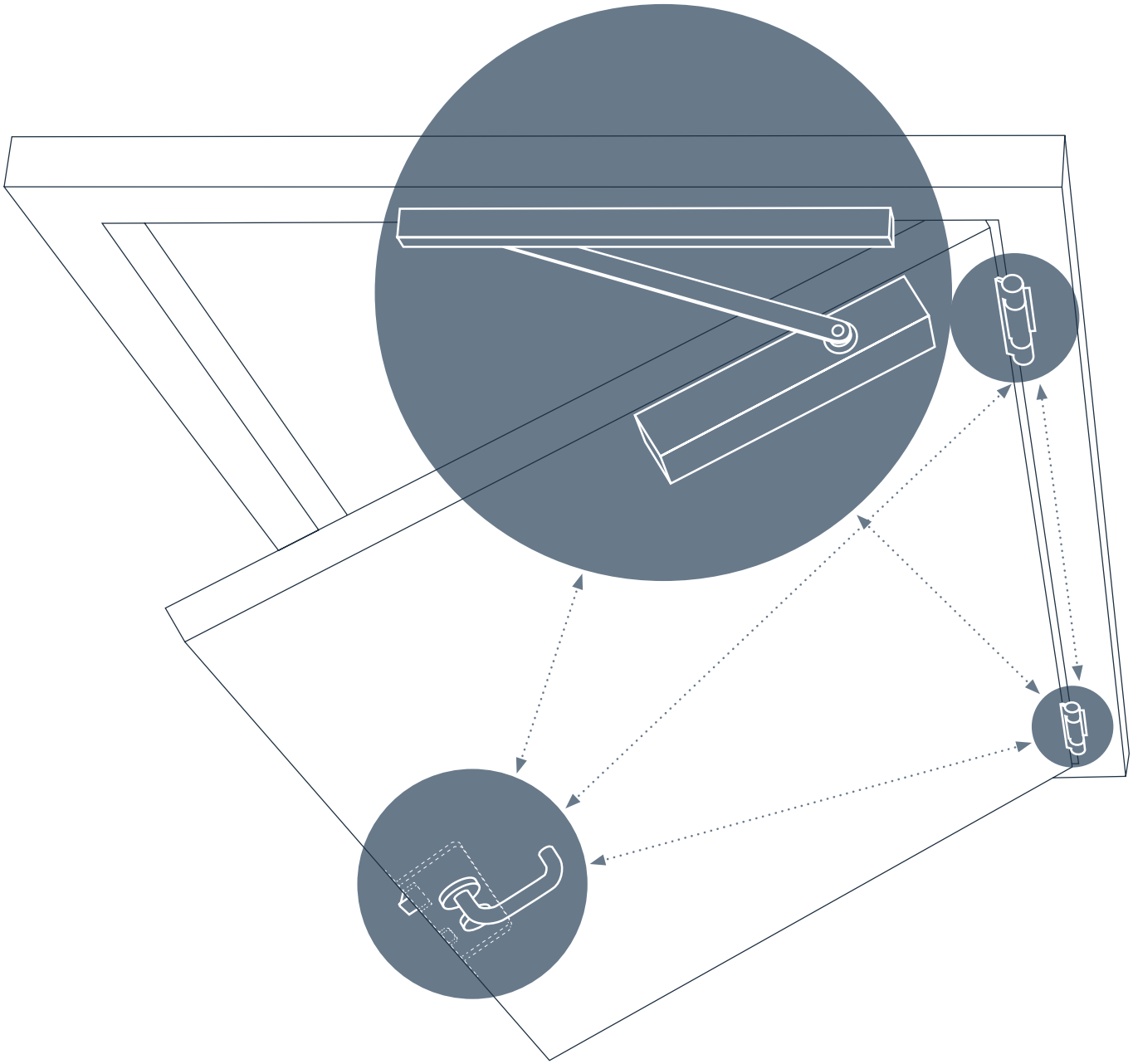

The Interplay of Forces

Safety, security and easy access do not have to contradict one another where doors are concerned. It is important to regard the door as a system, however, because it then becomes clear quickly that maximum closing security with simultaneous ease of opening can only be defined through the optimised interplay of the hinges, latch, fittings technology and closer. Poorly mounted hinges or stiff latches rapidly produce unfavourable closing forces and soon bring the door closers, which are supposed to provide easy entry and exit, to their safety limits. ECO Schulte defines safety, security and easy access through the ECO system – and builds in safety reserves just in case the unexpected happens. And it goes without saying that all of the system components comply with European standards.

Swissdoor ApS • Stenhuggervej 2 • 5471 Søndersø • Danmark Telefon +45 86 28 00 00 • mail@swissdoor.dk • www.swissdoor.dk

Standards are Defined Safety and Security

The door and the technology that makes a door function properly form a highly complex system. The key to the functional reliability of the whole system is a standards concept which defines precise requirements and test procedures for the various products.

ECO Schulte regards standards as an unconditional guarantee which must be at least fulfilled - but which ECO often enough exceeds when it is of benefit to the processor, user or planner. The standards for door systems are recognized all over the world and help to guarantee a high level of safety, security and functionality across national frontiers and beyond the limits of individual product ranges. This applies to the individual components as well as the entire system.

The future of standards and norms is already reflected in the corporate philosophy of ECO Schulte: While it is mainly the individual functional elements that are described today, the standards of tomorrow will be dedicated more and more to conceptional units as well as the door as a complete system.

CE EN

ECO **products are manufactured in accordance with the following European standards:**

DIN EN 1906:2010
Door handles and knobs

DIN EN 1125:2008
Panic door locks with a horizontal activation bar for doors in escape routes

DIN EN 1154:1996 + A1:2002
Door closing mechanisms with a controlled closing sequence

DIN EN 179:2008
Emergency exit locks with handles or impact plates for doors in escape routes

DIN EN 1158:1997 + A1:2002
Closing sequence regulators

DIN EN 1935:2002
Single axis door and window hinges

DIN EN 12209:2003
Mechanically operated locks and strike plates

Where there's a door…

Whether under our own trademark or as an OEM partner product of renowned door manufacturers, solutions from ECO Schulte make doors functional all over the world. Where there's a door, ECO Schulte is not far away.

All over the planet, builders and investors are realizing demanding projects together with architects and planners. Clever solutions for doors are always in demand. Our philosophy of system security and reliability in the door is to be found just as much in contemporary architecture as in impressive hotels, public buildings, private residences, royal castles, private apartments and stadia.

Real estate symbolizes lasting value all over the world – and ECO products do justice to this aspiration with German quality consciousness, a product range based on international standards and the accompanying services with which we keep in close touch with our customers and markets.

Our customers are the manufacturers of doors and we develop and constantly refine our products in close coordination with them. Our customers are also architects, developers, planners and processors – and we provide all of these people with technical solutions for all aspects of the door.
We provide both customer groups with the highest possible level of design, functionality, safety and security and thereby with a high value – a value you can rely on.

Ford, Aachen, Germany

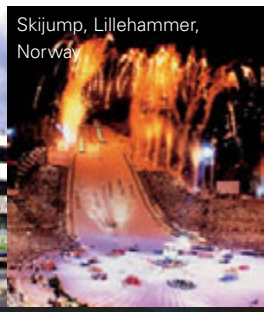
Skijump, Lillehammer, Norway

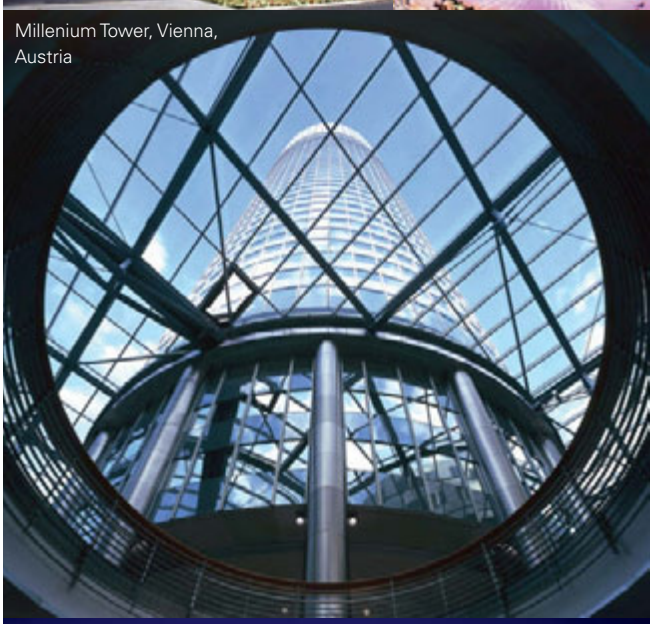
Millenium Tower, Vienna, Austria

European Parliament, Brussels, Belgium

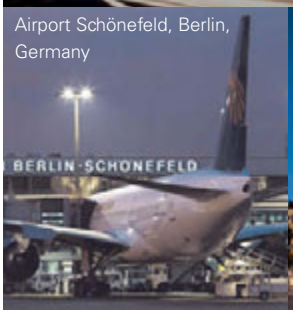

Airport Schönefeld, Berlin, Germany

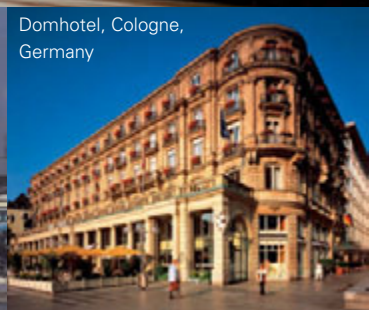
Domhotel, Cologne, Germany

Swissdoor ApS • Stenhuggervej 2 • 5471 Søndersø • Danmark Telefon +45 86 28 00 00 • mail@swissdoor.dk • www.swissdoor.dk

CentrO, Oberhausen, Germany

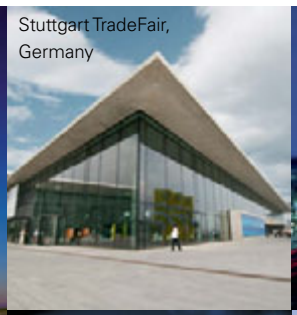
Stuttgart TradeFair, Germany

Airport Düsseldorf, Germany

Kempinski, Heiligendamm, Germany

Art Museum, Stuttgart, Germany

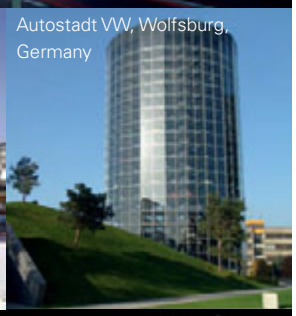
Autostadt VW, Wolfsburg, Germany

National-/Olympic Stadium, Beijing, China

Centro Commercial, Lisbon, Portugal

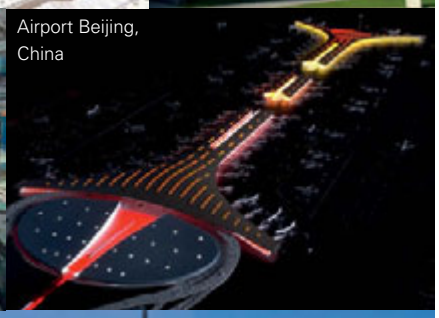
Airport Beijing, China

Humboldt University, Berlin, Germany

Sales offices and production sites

ECO is present all over the world. By keeping to a consistent course of expansion, ECO now has a production and marketing network in Europe and Asia.

Production site and head office

ECO **Schulte GmbH & Co. KG**
Iserlohner Landstraße 89
D-58706 Menden

Phone +49 2373 9276-0
Fax +49 2373 9276-40
info@eco-schulte.de
www.eco-schulte.de

Production site Luckenwalde

ESB Schulte GmbH & Co. KG
Industriestraße 2
D-14943 Luckenwalde

Phone +49 3371 6949-0
Fax +49 3371 6949-114
info@eco-schulte.de
www.eco-schulte.de

Production site China

ECO **Schulte Doorsystem Zhuhai Co., Ltd.**
No.31 Zhuhai Free Trade Zone,
CN – Zhuhai, Guangdong

Phone +86 756 8819139
Fax +86 756 8819580
info@eco-schulte.cn
www.eco-schulte.cn

Sales office Austria

ECO **Schulte Austria GmbH**
Industriestraße 16
A-9586 Fürnitz

Phone +43 4257 2 93 34-0
Fax +43 4257 2 93 34-33
Mobile +43 676 470 47 29
hussmann@eco-schulte.at

Sales office Poland

ECO **Schulte Sp. z o.o.**
ul. Sokolowska 41
PL-05-090 Wypedy

Phone +48 22 720 3993
Fax +48 22 720 0370
Mobile +48 604 483442
h.wloszczuk@ecoschulte.pl

Swissdoor ApS • Stenhuggervej 2 • 5471 Søndersø • Danmark Telefon +45 86 28 00 00 • mail@swissdoor.dk • www.swissdoor.dk

ECO Schulte GmbH & Co. KG
ESB Schulte GmbH & Co. KG
ECO Schulte Doorsystem
Zhuhai Co., Ltd.
ECO Schulte Sp. z o.o.
ECO Schulte Austria GmbH

Please step in:

The World of ECO Schulte.

Swissdoor ApS • Stenhuggervej 2 • 5471 Søndersø • Danmark Telefon +45 86 28 00 00 • mail@swissdoor.dk • www.swissdoor.dk

The ECO System: Safety and Security are Inseparable

The world of ECO Schulte is the technology in and around doors. As one of a very few system suppliers in the world, the company pursues a universal approach. The technologies are developed and constantly refined in close coordination with the manufacturers of doors and the processing specialists in tradesman's businesses. ECO never focuses purely on the individual product here but always on the interplay of all components within the door system, from the closer to the hinge and from the lock to the fittings. The door is a complex structure of safety and security which protects life and limb – and values. All of these are valuable commodities which deserve the best quality and maximum functional reliability. Only the best is good enough where doors are concerned – ECO Schulte.

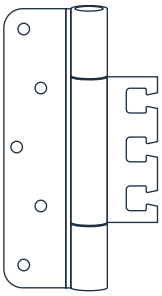

Hinge Technology

Hinges are responsible for carrying the weight of the door and moving it from one position to another. ECO Schulte has a wide range of tailor-made solutions, from laser-welded industrial hinges to unique hinges mounted on ball bearings.
Page 524

Swissdoor ApS • Stenhuggervej 2 • 5471 Søndersø • Danmark Telefon +45 86 28 00 00 • mail@swissdoor.dk • www.swissdoor.dk

SWiSSDOOR
DØRTEKNIK FOR PROFESSIONELLE

Swissdoor ApS • Stenhuggervej 2 • 5471 Søndersø • Danmark Telefon +45 86 28 00 00 • mail@swissdoor.dk • www.swissdoor.dk

Door Closer Technology

The company has set new standards with the new ECO Newton door closer generation (photo). ECO also produces the ECO Multi Genius door closer, however. No matter whether standard arm, slide rail or internal systems for single and double-leaf doors are required, ECO Schulte can offer the complete programme for every door type.
Page 24

Handles Technology

With its fittings technology, ECO deliberately focuses on the classics – and consistently introduces new fittings versions throughout the product range.
Page 184

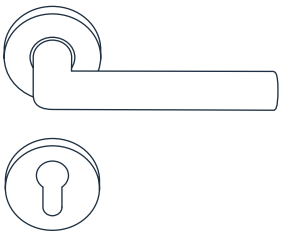

Panic, Lock and Bolting Technology

Products for the situation you hope will never happen: co-ordinated, panic, lock and bolting technology which guarantees the safe opening of the door in panic situations. If you look at it this way, security means always being on the safe side - with ECO.
Page 378

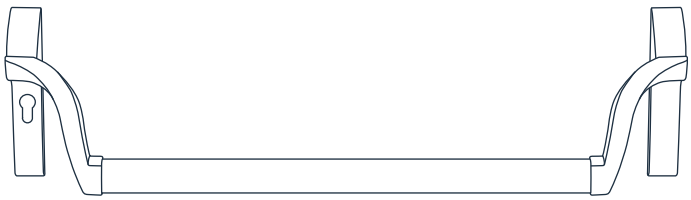

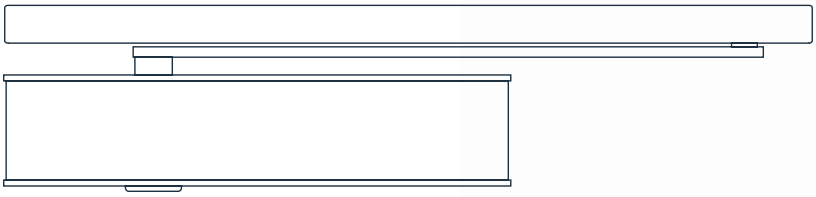

Door closer technology

Aesthetic Powerhouses

Swissdoor ApS • Stenhuggervej 2 • 5471 Søndersø • Danmark Telefon +45 86 28 00 00 • mail@swissdoor.dk • www.swissdoor.dk

SWiSSDOOR
DØRTEKNIK FOR PROFESSIONELLE

Turning safety into a product

Door closers have to cope with routine daily business and emergency situations: they soften the door strike and close the door securely. In emergency situations, they guarantee that fire compartments are separated reliably so that lives can be saved. In routine situations, the asymmetric transmission makes it easier to open the door.

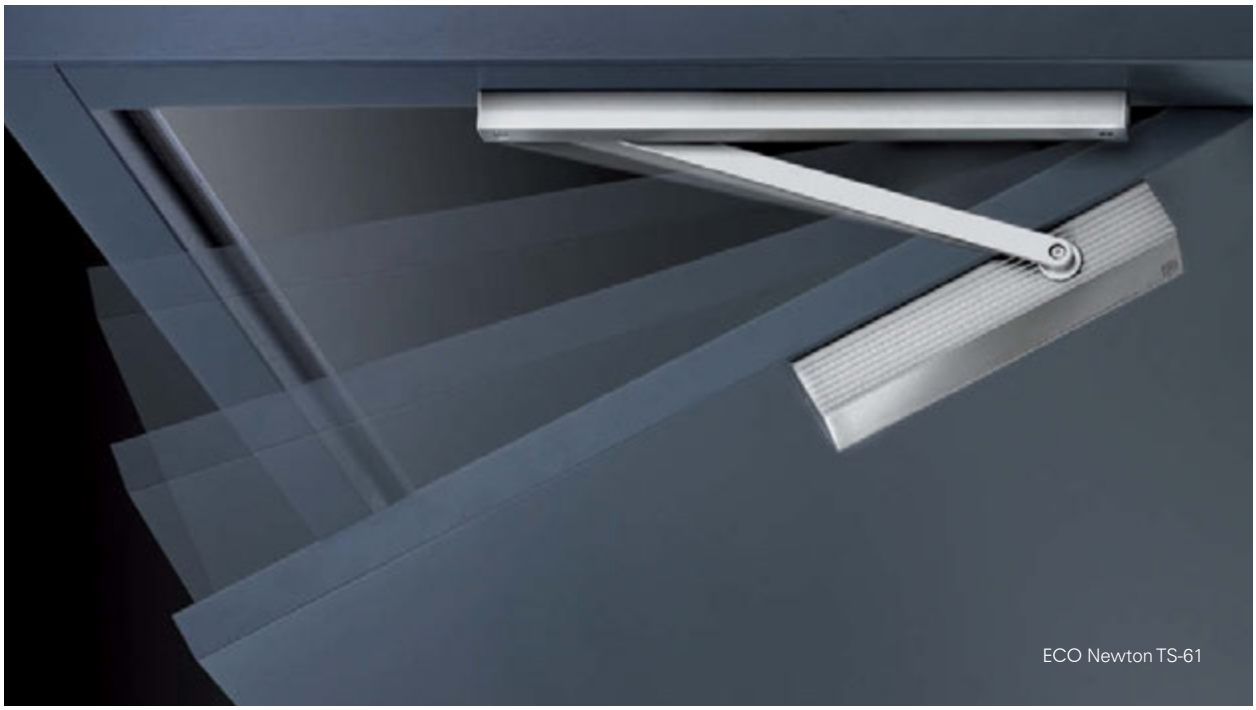
ECO Newton TS-61

Door closers from ECO Schulte work purely mechanically with hydraulically damped, stepped gear spring force. The mechanical principle ensures correct functioning under all conditions – even when there is a power cut. The special gearing geometry guarantees easy opening while at the same time producing sufficient standard-compliant closing power to overcome the lock resistance.

Door closers have a safety function, which makes them a part of the architecture. The ECO Schulte door closer portfolio reflects the complete spectrum of practical demands of modern architecture – no matter whether these are defined for aesthetic or functional reasons. They extend from the functional standard of the standard arm door closer through minimalized, aesthetic slide rail closers and hold-open systems to "virtually invisible" closing solutions integrated into the floor or door leaf.

Swissdoor ApS • Stenhuggervej 2 • 5471 Søndersø • Danmark Telefon +45 86 28 00 00 • mail@swissdoor.dk • www.swissdoor.dk

The Aesthete: ECO Newton

The new door closer generation from ECO Schulte: a meticulously well-conceived design consisting of a stainless steel cover and aluminium body. Concealed mounting plates, adjusting elements protected against vandalism, colour-matched materials and the variable combination of all slide rail door closers with closing sequence regulator systems are the distinguishing features of this new generation of door closer models. In addition to this, the new "ECOvalve" technology guarantees the simple and high-precision adjustment of all parameters of the closing process.

ECO Newton TS-61

ECO **Newton overview**

Door closer with slide rail

Description	Tests [1]	Size acc. to EN [2]	Latching speed adjustment [3]	Back-check [4]	Closing force adjustment	Delayed action [5]	DIN L + R / BS + BG [6]
TS-61 EN	F / CE	5–6 continously	from the front	adjustable	from the front	optional	yes / yes[7]
TS-61 EN	F / CE	2–5 continously	from the front	adjustable	from the front	optional	yes / yes[7]
TS-51 EN	F / CE	1–4 continously	from the front	adjustable	from the front	–	yes / yes[7]
TS-41 EN	F / CE	1–4 continously	from the side	fixed	from the side	–	yes / yes
TS-31 EN	F / CE	1–3 continously	from the side	fixed	from the side	–	yes / yes

Door closer with standard arm

Description	Tests [1]	Size acc. to EN [2]	Latching speed adjustment [3]	Back-check [4]	Closing force adjustment	Delayed action [5]	DIN L + R / BS + BG [6]
TS-50 EN	F / CE	1–5 continously	from the side	fixed	from the side	–	yes / yes
TS-20 EN	F / CE	2 / 3 / 5	from the side	fixed	from the side	–	yes / yes
TS-16 EN	–	1–6	from the side	–	from the side	–	yes / yes
TS-15 EN	–	2 / 3 / 4 / 5	from the side	–	from the side	–	yes / yes
TS-14 EN	–	1 / 2 / 3 / 4	from the side	–	from the side	–	yes / yes

Legend: **1)** EN 1154 - CE-sign and fire-protection tested **2)** Door closer sizes acc. to European Norm (EN) **3)** Increases the closing force to ensure that the door closes reliably **4)** Regulates the force which is necessary to open the door **5)** Comfortable delayed action, for example for hotel rooms **6)** Available for DIN left and DIN right (L+R) as well as for hinge side (BS) or hinge-opposite side (BG) **7)** Please order execution G (=hinge-opposite side)

The highlights of the ECO Newton range

Two units for the entire building

The ECO Newton closer portfolio covers all door dimensions with only two basic closer units. In addition to this, end-mounted valve technology permits the mounting of the same closer on the hinge and hinge-opposite side (TS 41, 31, 50 and 20).

Combination of elegant materials

Elegant materials are standard with ECO Newton: the stainless steel cover and aluminium body unit of the new door closer generation are perfectly matched with one another - in an architecturally compatible form language.

Intelligent stainless steel cover

ECOclic envelops the aluminium body unit with the power of spring steel. The cover conceals all of the adjusting elements and cannot be removed without tools, thus securing the closer against unauthorized access.

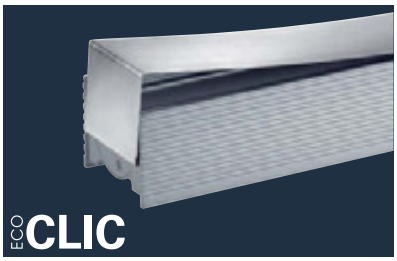

Well-conceived assembly system

The special feature of the ECO Newton assembly system is that the mounting plate is completely concealed by the aluminium body of the closer, thus making it invisible. The mounting plate has standardized drill holes which guarantee time-saving, secure and simple attachment.

New valve technology

The new ECOvalve technology offers a wide and precisely adjustable setting range. This means the simple, high-precision and permanently secure adjustment of all parameters of the closing process with one conventional Allen key. As with all ECO Newton door closers, the closing speed and latching are regulated via the ECOvalve as a standard feature.

Swissdoor ApS • Stenhuggervej 2 • 5471 Søndersø • Danmark Telefon +45 86 28 00 00 • mail@swissdoor.dk • www.swissdoor.dk

Stainless steel full cover

The full cover is an optional stainless steel covering for the ECO Newton door closers and related slide rails. The overall appearance is perfected by a lever arm with a stainless steel look. A cover on the closer body is available for standard arm closers.

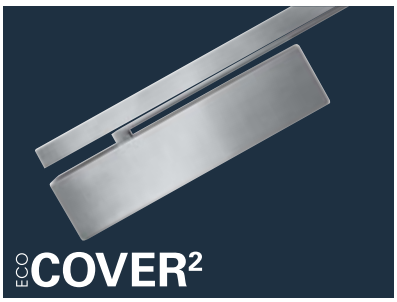

Saves resources

ECO Newton door closers are up to 1,000 grammes lighter than comparable solutions. Their intelligent construction and carefully planned use of materials help considerably to save resources - without compromising functionality, safety, security or quality.

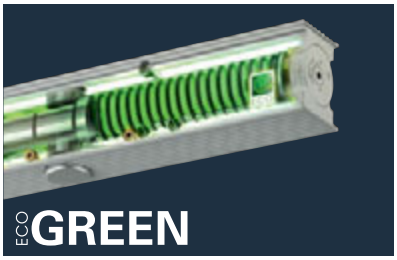

Uniform finishing edge and colour design

The mounted slide rail and door closer are flush when the door is closed. The colours of all materials are perfectly matched - right down to the end caps of the slide rail. In this way, ECO Newton door closers can be integrated harmoniously into every design context.

Combination talent

The ECO Newton Vario concept permits the use of all slide rail door closers and can even be combined with different door leaf widths. In this way, optimum value for money can be achieved for each individual door situation.

Standardized quality

As with all ECO Schulte products, the door closers are manufactured in a quality management process certified in accordance with **ISO 9001**. This guarantees that top quality is produced and installed. Many door closer versions are suitable for use with fire and smoke protection doors - and tested in line with **EN 1154 A**. All products tested in accordance with valid European directives have the CE mark applied to them.

CE EN

The integration specialist: ECO Multi-Genius

This door closer makes itself invisible. The ECO Multi-Genius is extremely compact, and this makes it suitable for installation in doors with a leaf thickness of only 40 mm. This in turn means that the closer can be integrated virtually invisibly before the door even leaves the factory. Thanks to its distinctly decreasing opening torque, the Multi-Genius is the ideal easy-use door closer with a high level of user convenience - plus a unique opening angle of 175°. Where doors are already fitted, the Multi-Genius also comes as an surface mounting model with a seamless stainless steel covering.

ECO Multi-Genius
Installation version

The aesthetics of integration

The ECO Multi-Genius is one of the most compact door closers on the market - compact enough for installation in wooden, sheet steel and profile frame doors made of aluminium/steel ≥ 40 mm. The principle works with an eccentrically controlled pull mechanism and microhydraulic damping unit which guarantee optimum user convenience. A visible closing power display **(in line with EN 1154 A)** enables you to set the desired closing force before installation. The closing speed and hydraulic latching have an infinitely variable adjustment even after installation.

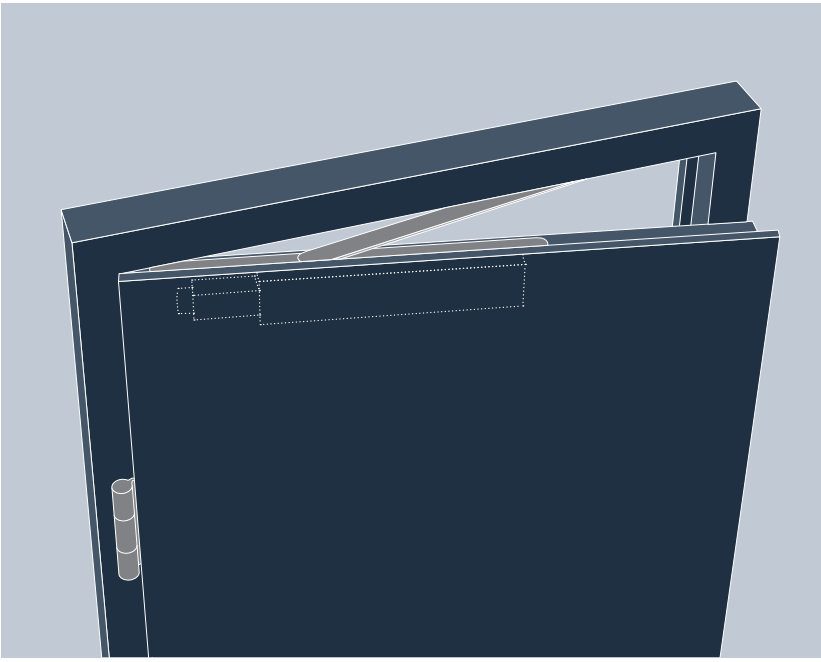

Swissdoor ApS • Stenhuggervej 2 • 5471 Søndersø • Danmark Telefon +45 86 28 00 00 • mail@swissdoor.dk • www.swissdoor.dk

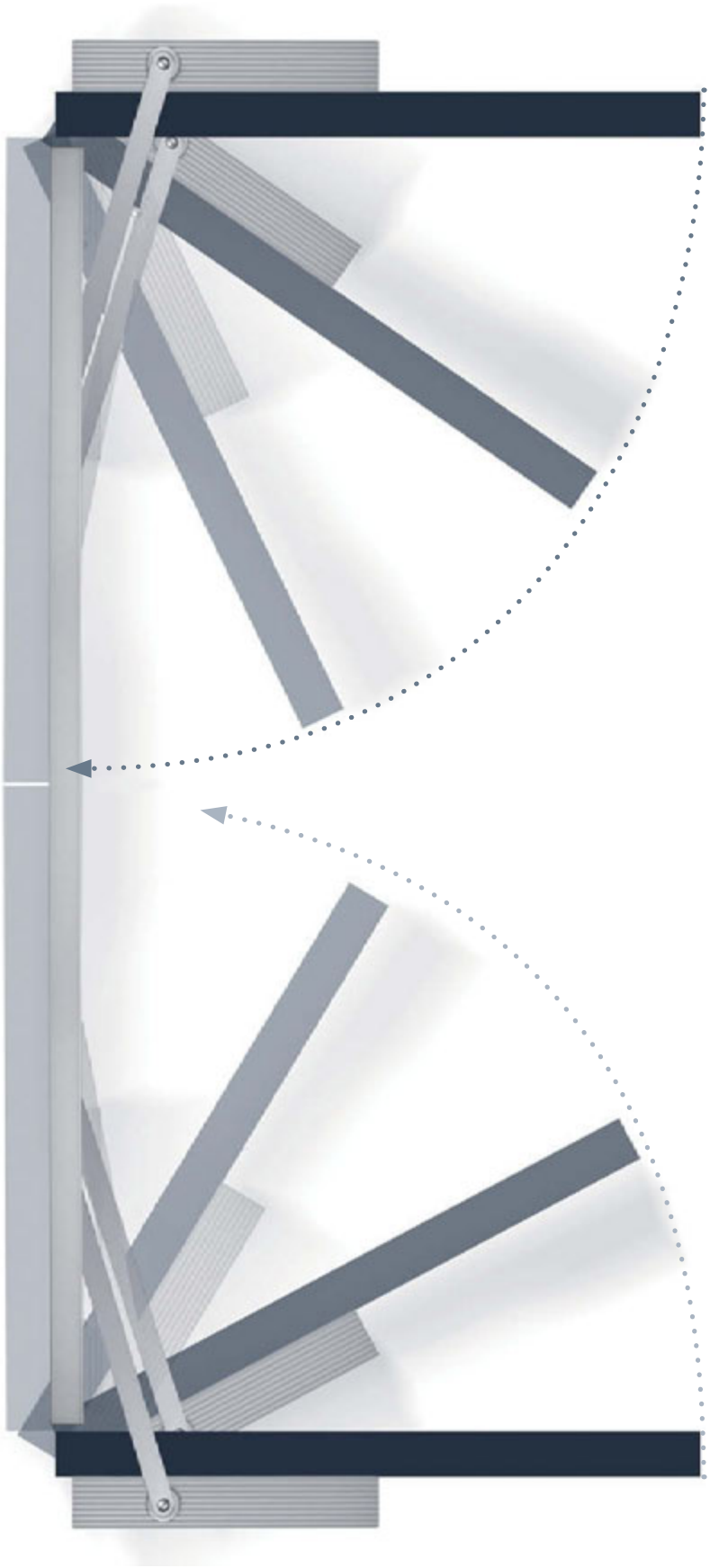

Precise timing

Door retainer systems are highly complex systems which were developed to separate fire and smoke compartments purely mechanically and independently. In the event of fire, a closing process is triggered, the predefined precision of which is reminiscent of fine choreography. A precisely defined closing sequence is prescribed for double leaf doors: the fixed leaf has to close first, then the active leaf. A play of forces that was developed to save human lives.

ECO Schulte offers all system components required for the build-up of complex door retainer systems - along with special consultancy on their proper use.

TABLE OF CONTENTS

ECO Newton

ECO Newton TS-61 (EN 6; EN 1 – 5 F)
Page 36

ECO Newton TS-51 (EN 1 – 4)
Page 44

ECO Newton TS-41 (EN 1 – 4)
Page 50

ECO Newton TS-31 (EN 1 – 3)
Page 58

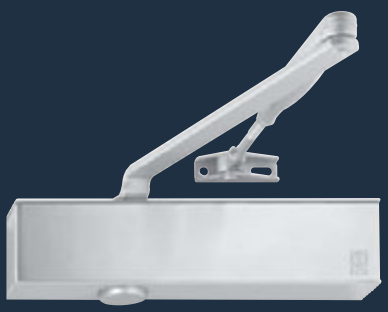

ECO Newton TS-50 (EN 1 – 5)
Page 78

ECO Newton TS-20 (EN 2/3/5)
Page 84

NEW!

ECO Newton TS-16
(EN 1 – 3, 4 – 6)
Page 90

NEW!

ECO Newton TS-15
(EN 2/3/4/5)
ECO Newton TS-15 K
(EN 1/2)
Page 96

NEW!

ECO Newton TS-14
(EN 1/2/3/4)
Page 104

Door closer

Multi-Genius (EN 1 – 4; EN 2 – 5)
Concealed / surface-mounted door closer
Page 110

NEW!

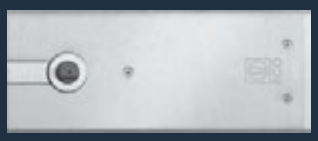

BTS (EN 3, EN 4)
Floor spring
Page 146

FTS 63 / FTS 63 R (EN 2 – 5; EN 2 – 6)
Free-swinging door closer
Page 142

NEW!

FDC - Swing-door drive unit (EN 3 – 6)
Page 150

Swissdoor ApS • Stenhuggervej 2 • 5471 Søndersø • Danmark Telefon +45 86 28 00 00 • mail@swissdoor.dk • www.swissdoor.dk

Slide rails

Slide rails for single-leaf doors

Slide rail B Page 67
Slide rail K Page 67
Slide rail B-FKL Page 67
Slide rail EF Page 68
Slide rail EFR Page 68

Slide rails for double-leaf doors

Slide rail SR Page 69
Slide rail SR-BG Page 70
Slide rail SR-EF-1G Page 71
Slide rail SR-EF-1S Page 72
Slide rail SR-EF-2 Page 73

Slide rails for double-leaf doors with integrated smoke detector

Slide rail SR-EFR-1G Page 74
Slide rail SR-EFR-1S Page 75
Slide rail SR-EFR-2 Page 76

Concealed slide rails for single-leaf doors

Slide rail ITS Page 137
Slide rail ITS-MFA Page 137
Slide rail ITS-EF Page 138

Concealed slide rails for double-leaf doors

Slide rail ITS-SR Page 139
Slide rail ITS-SR-EF Page 139

Accessories

Accessories

Arms Page 163
Hold-open arm Page 164
Under-lintel angle Page 165
Glass clamping device Page 166
Adaptor profile Page 167
Accessory set MOL Page 169
Pivot hinge Page 169

Accessories for combination with ECO hold-open devices (Except ITS / FTS)

Interrupt button top-mounted / concealed Page 170
Smoke switch Page 170
Power supply Page 170
Electromagnetic door retainer Page 171
Anchor plate Page 172

Accessories for combination with ECO hold-open devices (ITS / FTS)

Power supply Page 173
Smoke switch Page 173
Smoke inducting system Page 173
Smoke switch Page 174
Mounting base Page 174
Magnetic clamp Page 175
Anchor plate Page 176
Test gas Page 177

Accessories for combination with ECO swing-door drive unit (FDC)

Mounting plate Page 178
Door stop Page 178
Brake for holding magnet Page 178
Axis extension Page 178
Operation panel Page 179
Key sense switch Page 179
Interrupt button Page 179
Flip switch Page 179
Elbow switch Page 180
Radar Page 180
Sensor strip Page 181
Finger protection shade Page 181
Floor stop Page 181
Dual locking device Page 182

ECO Newton TS-61

Swissdoor ApS • Stenhuggervej 2 • 5471 Søndersø • Danmark Telefon +45 86 28 00 00 • mail@swissdoor.dk • www.swissdoor.dk

ECO **Newton TS-61**

EN 1154 A F CE

ECO

Product characteristics

Closing force (continuously adjustable)	Size acc. to EN	1– 5 F	6
Door width	≤ 1.250 mm	■	■
acc. to EN	≤ 1.400 mm	-	■
Dimensions (incl. mounting plate)	Length in mm Depth in mm Height in mm	287 49 62	267 49 62
Mounting plate acc. to **EN 1154 A** (supplemetary sheet 1)		■	■
Hinge-side and hinge-opposite side		◘	◘
DIN left / right		■	■
Latching speed (continuously adjustable)		■	■
Closing speed (continuously adjustable)		■	■
Back-check (continuously adjustable)		■	■
Delayed action (continuously adjustable)		◘	◘
Tested acc. to EN		EN 1154 A	
Suitable for fire- and smoke control doors		F	
Certified according to EU-Directive		CE	

■ Yes
- No
◘ Option

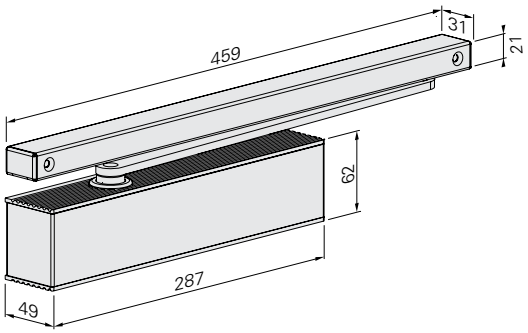

Dimensions: TS-61 (1 – 5)

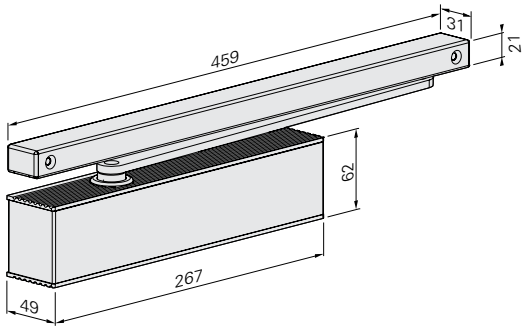

Dimensions: TS-61 (6)

ECO Newton TS-61 ▪ Highlights at a glance

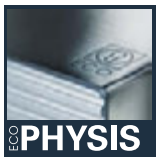

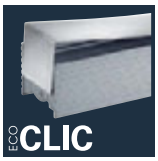

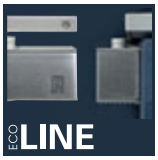

Details regarding the ECO Newton Highlights can be found in the intro of this chapter.

Body: Silver RAL 9006
ECOclic: Stainless steel polished or satin

Body + ECOclic:
White RAL 9016

Body + ECOclic:
Black RAL 9005

Body + ECOclic:
Brown RAL 8014

Slide rail and arm are always delivered in the same colour as the ordered door closer body.

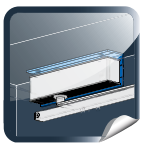

Under-lintel angle for door closer
Page 165

Under-lintel angle for slide rail
Page 165

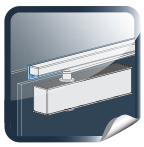

Adaptor profile
Page 167

Order information

ECO Newton TS-61 ▪ Door closer with slide rail

Product information

Closing force 2- 5 (5-6), tested acc. to **EN 1154 A** (for door width up to 1.250 mm (1.400 mm) continuously adjustable. Latching speed, closing speed and back-check continuously adjustable. **Delayed action as option.** Same version DIN left and DIN right. Mounting height with mounting plate only 49 mm. Door opening angle: 180°

- ECOunity: Standard mounting and head mounting on hinge side and hinge-opposite side
- ECOphysis: Door closer and slide rail build a unit in aluminium and stainless steel
- ECOclic: The stainless steel cover encloses the aluminium body with the power of spring steel and conceals all of the adjusting elements, thus securing the closer against unauthorized access.
- ECOmount: Mounting plate according to **EN 1154** is completely covered by the door closer
- ECOvalve: Simple, high-precision and permanently secure adjustment of all parameters of the closing process with one conventional Allen key.
- ECOgreen: The intelligent construction and carefully planned use of materials help considerably to save resources
- ECOcover[2]: Optional stainless steel cover for the ECO Newton door closers and related slide rails. Please order the lever arm in stainless steel look for the perfect overall appearance.
- ECOline: The mounted slide rail and door closer are flush when the door is closed. The colours of all materials are perfectly matched - right down to the end caps of the slide rail.
- ECOvario: Permits the use of all slide rail door closers and can even be combined with different door leaf widths. In this way, optimum value for money can be achieved for each individual door situation.

Delivery with slide rail B and mounting plate as standard.

Swissdoor ApS • Stenhuggervej 2 • 5471 Søndersø • Danmark Telefon +45 86 28 00 00 • mail@swissdoor.dk • www.swissdoor.dk

SWISSDOOR
DØRTEKNIK FOR PROFESSIONELLE

ECO UNITY

ECO **Newton**
Highlights in detail.

Two units for the entire building

The ECO Newton closer portfolio covers all door dimensions with only two basic closer units. In addition to this, end-mounted valve technology permits the mounting of the same closer on the hinge- and hinge-opposite side (TS-31/41).

Hinge side

Without delayed action

TS-61 B (5-6)

Hinge side slide rail B	Colour		Article number	Hinge side without slide rail	Colour		Article number
TS-61 B (5-6)	Silver	RAL 9006*	306153CB1A01010	TS-61 B (5-6)	Silver	RAL 9006*	356153CB1A00010
TS-61 B (5-6)	White	RAL 9016	306153CB3E01010	TS-61 B (5-6)	White	RAL 9016	356153CB3E00010
TS-61 B (5-6)	Brown	RAL 8014	306153CB3D01010	TS-61 B (5-6)	Brown	RAL 8014	356153CB3D00010
TS-61 B (5-6)	Black	RAL 9005	306153CB3G01010	TS-61 B (5-6)	Black	RAL 9005	356153CB3G00010

TS-61 B (2-5)

Hinge side slide rail B	Colour		Article number	Hinge side without slide rail	Colour		Article number
TS-61 B (2-5)	Silver	RAL 9006*	306153AB1A01010	TS-61 B (2-5)	Silver	RAL 9006*	356153AB1A00010
TS-61 B (2-5)	White	RAL 9016	306153AB3E01010	TS-61 B (2-5)	White	RAL 9016	356153AB3E00010
TS-61 B (2-5)	Brown	RAL 8014	306153AB3D01010	TS-61 B (2-5)	Brown	RAL 8014	356153AB3D00010
TS-61 B (2-5)	Black	RAL 9005	306153AB3G01010	TS-61 B (2-5)	Black	RAL 9005	356153AB3G00010

With delayed action

TS-61 B-SV (5-6)

Hinge side slide rail B	Colour		Article number	Hinge side without slide rail	Colour		Article number
TS-61 B-SV (5-6)	Silver	RAL 9006*	306154CB1A01010	TS-61 B-SV (5-6)	Silver	RAL 9006*	356154CB1A00010
TS-61 B-SV (5-6)	White	RAL 9016	306154CB3E01010	TS-61 B-SV (5-6)	White	RAL 9016	356154CB3E00010
TS-61 B-SV (5-6)	Brown	RAL 8014	306154CB3D01010	TS-61 B-SV (5-6)	Brown	RAL 8014	356154CB3D00010
TS-61 B-SV (5-6)	Black	RAL 9005	306154CB3G01010	TS-61 B-SV (5-6)	Black	RAL 9005	356154CB3G00010

TS-61 B-SV (2-5)

Hinge side slide rail B	Colour		Article number	Hinge side without slide rail	Colour		Article number
TS-61 B-SV (2-5)	Silver	RAL 9006*	306154AB1A01010	TS-61 B-SV (2-5)	Silver	RAL 9006*	356154AB1A00010
TS-61 B-SV (2-5)	White	RAL 9016	306154AB3E01010	TS-61 B-SV (2-5)	White	RAL 9016	356154AB3E00010
TS-61 B-SV (2-5)	Brown	RAL 8014	306154AB3D01010	TS-61 B-SV (2-5)	Brown	RAL 8014	356154AB3D00010
TS-61 B-SV (2-5)	Black	RAL 9005	306154AB3G01010	TS-61 B-SV (2-5)	Black	RAL 9005	356154AB3G00010

*Door closer body in silver RAL 9006, ECOclic stainless steel satin, polished on request

Hinge-opposite side

Without delayed action

TS-61 G (5-6)

Hinge-opposite side slide rail B	Colour		Article number
TS-61 G (5-6)	Silver	RAL 9006*	306163CB1A01010
TS-61 G (5-6)	White	RAL 9016	306163CB3E01010
TS-61 G (5-6)	Brown	RAL 8014	306163CB3D01010
TS-61 G (5-6)	Black	RAL 9005	306163CB3G01010

Hinge-opposite side without slide rail	Colour		Article number
TS-61 G (5-6)	Silver	RAL 9006*	356163CB1A00010
TS-61 G (5-6)	White	RAL 9016	356163CB3E00010
TS-61 G (5-6)	Brown	RAL 8014	356163CB3D00010
TS-61 G (5-6)	Black	RAL 9005	356163CB3G00010

TS-61 G (2-5)

Hinge-opposite side slide rail B	Colour		Article number
TS-61 G (2-5)	Silver	RAL 9006*	306163AB1A01010
TS-61 G (2-5)	White	RAL 9016	306163AB3E01010
TS-61 G (2-5)	Brown	RAL 8014	306163AB3D01010
TS-61 G (2-5)	Black	RAL 9005	306163AB3G01010

Hinge-opposite side without slide rail	Colour		Article number
TS-61 G (2-5)	Silver	RAL 9006*	356163AB1A00010
TS-61 G (2-5)	White	RAL 9016	356163AB3E00010
TS-61 G (2-5)	Brown	RAL 8014	356163AB3D00010
TS-61 G (2-5)	Black	RAL 9005	356163AB3G00010

With delayed action

TS-61 G-SV (5-6)

Hinge-opposite side slide rail B	Colour		Article number
TS-61 G-SV (5-6)	Silver	RAL 9006*	306164CB1A01010
TS-61 G-SV (5-6)	White	RAL 9016	306164CB3E01010
TS-61 G-SV (5-6)	Brown	RAL 8014	306164CB3D01010
TS-61 G-SV (5-6)	Black	RAL 9005	306164CB3G01010

Hinge-opposite side without slide rail	Colour		Article number
TS-61 G-SV (5-6)	Silver	RAL 9006*	356164CB1A00010
TS-61 G-SV (5-6)	White	RAL 9016	356164CB3E00010
TS-61 G-SV (5-6)	Brown	RAL 8014	356164CB3D00010
TS-61 G-SV (5-6)	Black	RAL 9005	356164CB3G00010

TS-61 G-SV (2-5)

Hinge-opposite side slide rail B	Colour		Article number
TS-61 G-SV (2-5)	Silver	RAL 9006*	306164AB1A01010
TS-61 G-SV (2-5)	White	RAL 9016	306164AB3E01010
TS-61 G-SV (2-5)	Brown	RAL 8014	306164AB3D01010
TS-61 G-SV (2-5)	Black	RAL 9005	306164AB3G01010

Hinge-opposite side without slide rail	Colour		Article number
TS-61 G-SV (2-5)	Silver	RAL 9006*	356164AB1A00010
TS-61 G-SV (2-5)	White	RAL 9016	356164AB3E00010
TS-61 G-SV (2-5)	Brown	RAL 8014	356164AB3D00010
TS-61 G-SV (2-5)	Black	RAL 9005	356164AB3G00010

Hinge side

Mounting with slide rail B, illustration DIN left-door, DIN right laterally reversed

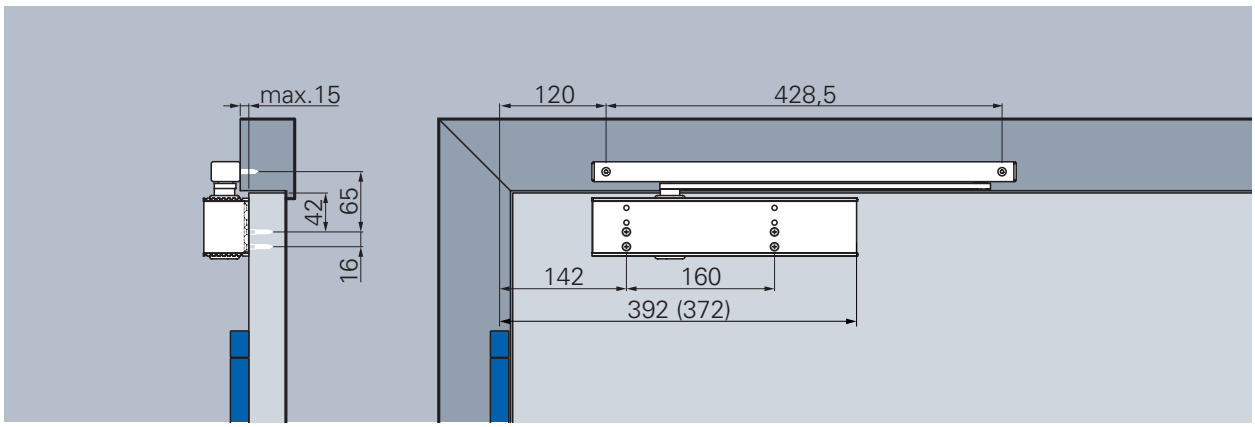

Standard mounting with slide rail B, hinge side

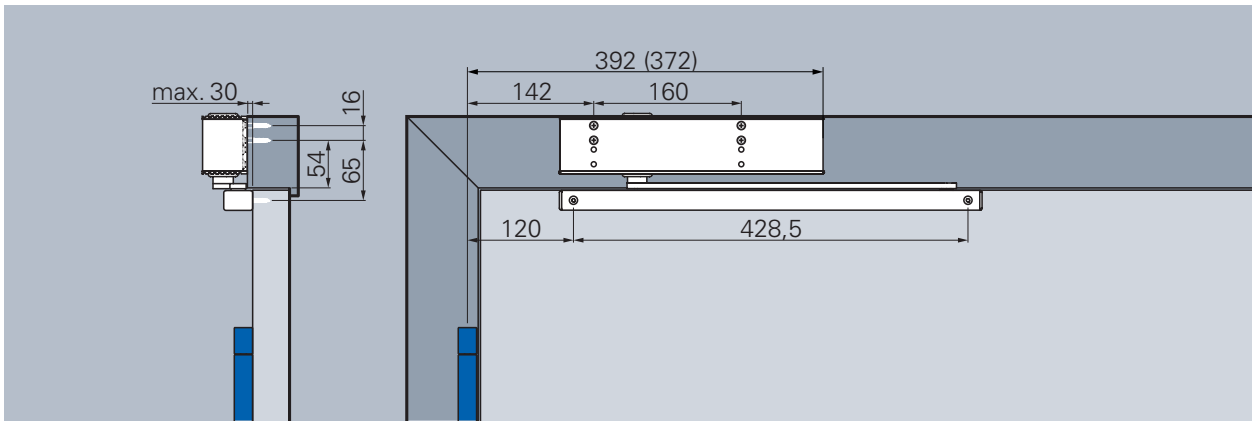

Head mounting with slide rail B, hinge side

Closing speed
Continuously adjustable closing speed from approx. 180° to 0°.

Latching speed
Increases the closing speed and thus the safe closing of the door, for example to overcome door seals, door locks and high air pressure.
Continously adjustable, works between 10 to 0°.

Back-check
Reduces the opening speed starting at 70° and avoids the slamming of the door.
Back-check continously adjustable

Delayed action (as option)
Reduces the closing speed and allows a safer passing for people and transports. Especially suitable for the use in nursing homes and hospitals. Delay action continously adjustable.
Works between 180° to 70°.

Closing force diagram ECO Newton TS-61, hinge side

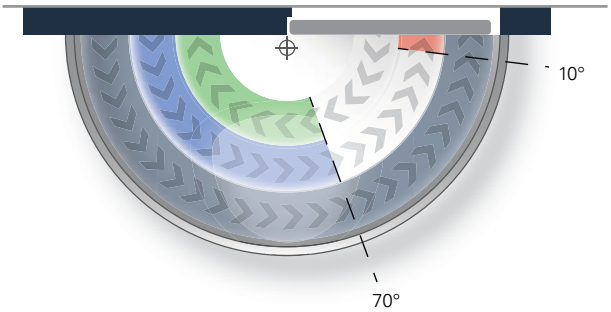

Closing force:	
Continuously adjustable TS-61 (5-6)	min. size 5 max. size 6
or	
Continuously adjustable TS-61 (2-5)	min. size 2 max. size 5
Default delivery condition:	size 3

Swissdoor ApS • Stenhuggervej 2 • 5471 Søndersø • Danmark Telefon +45 86 28 00 00 • mail@swissdoor.dk • www.swissdoor.dk

Hinge-opposite side

Mounting with slide rail B, illustration DIN right-door, DIN right laterally reversed

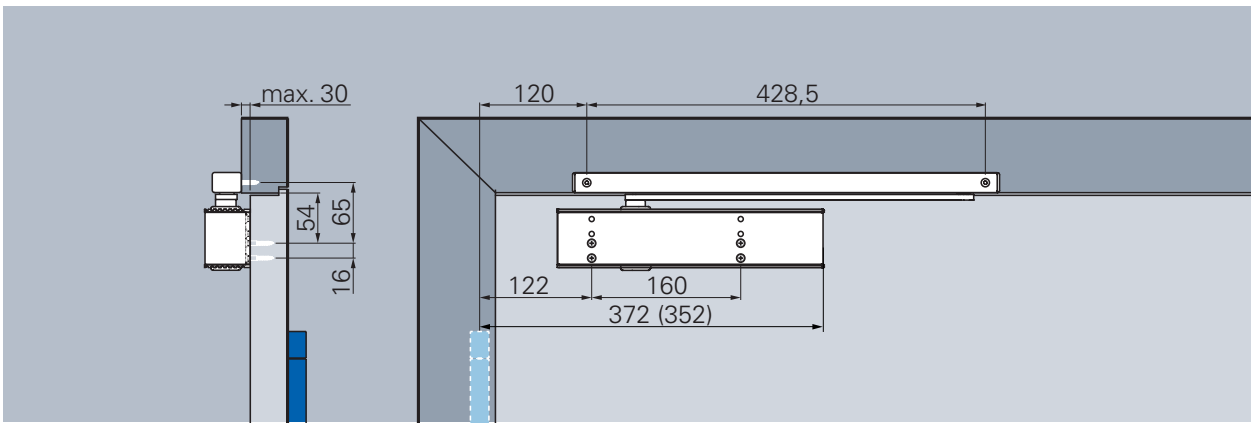

Standard mounting with slide rail B, hinge-opposite side

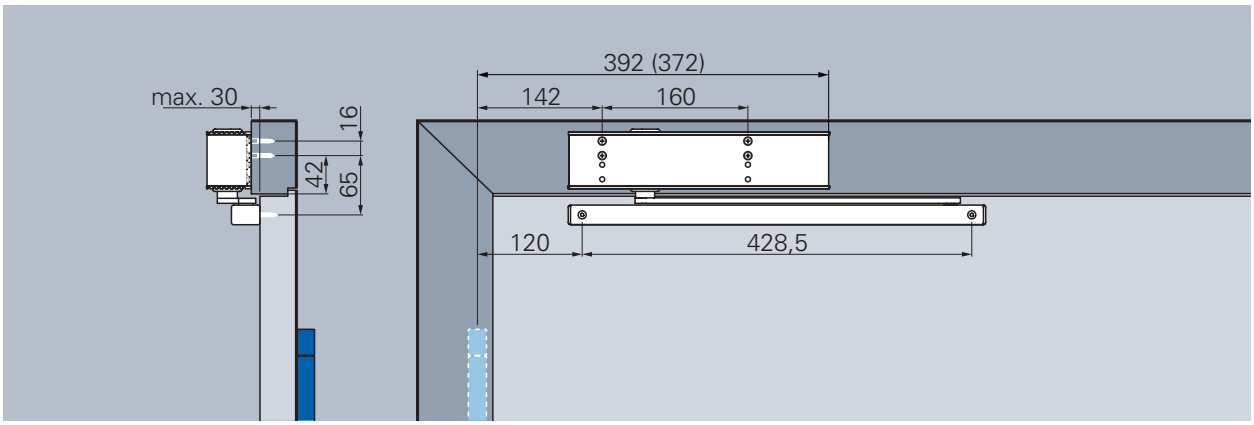

Head mounting with slide rail B, hinge-opposite side

Closing speed
Continuously adjustable closing speed from approx. 140° to 0°.

Latching speed
Increases the closing speed and thus the safe closing of the door, for example to overcome door seals, door locks and high air pressure.
Continously adjustable, works between 10 to 0°

Back-check
Reduces the opening speed starting at 70° and avoids the slamming of the door.
Back-check continously adjustable
Note!:
Back-check out of order for head-mounting / mounting on hinge-opposite side

Delayed action (as option)
Reduces the closing speed and allows a safer passing for people and transports. Especially suitable for the use in nursing homes and hospitals. Delay action continously adjustable.
Works between 140° to 70°.

Closing force diagram ECO Newton TS-61, hinge-opposite side

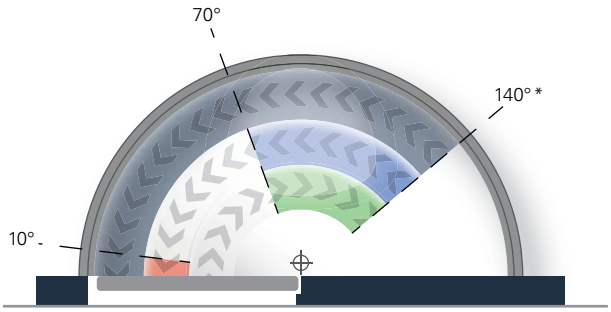

*Varies according to door thickness and type of hinge

A door stopper for opening limit is a must!

ECO Newton TS-51

Swissdoor ApS • Stenhuggervej 2 • 5471 Søndersø • Danmark Telefon +45 86 28 00 00 • mail@swissdoor.dk • www.swissdoor.dk

ECO **Newton TS-51**

EN 1154 A F CE

ECO

Product characteristics

Closing force (continuously adjustable)	Size acc. to EN	1 – 4
Door width	acc. to EN ≤ 1.100 mm	■
Dimensions (incl. mounting plate)	Length in mm Depth in mm Height in mm	265 46 61
Mounting plate acc. to **EN 1154 A** (supplemetary sheet 1)		■
Hinge-side and hinge-opposite side		◘
DIN left / right		■
Latching speed (continuously adjustable)		■
Closing speed (continuously adjustable)		■
Back-check (continuously adjustable)		■
Tested acc. to EN		EN 1154 A
Suitable for fire- and smoke control doors		F
Certified according to EU-Directive		CE

■ Yes
- No
◘ Option

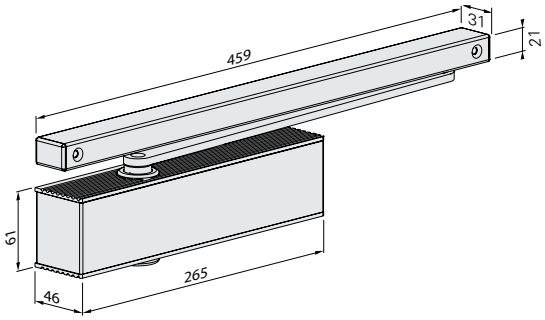

Dimensions: TS-51

2

ECO Newton TS-51 ▪ Order information

*optional

Details regarding the ECO Newton Highlights can be found in the intro of this chapter.

Body: Silver RAL 9006
ECOclic: Stainless steel polished or satin

Body + ECOclic:
White RAL 9016

Body + ECOclic:
Black RAL 9005

Body + ECOclic:
Brown RAL 8014

Slide rail and arm are always delivered in the same colour as the ordered door closer body.

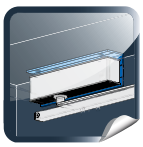

Under-lintel angle for door closer
Page 165

Under-lintel angle for slide rail
Page 165

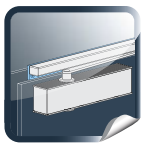

Adaptor profile
Page 167

Order information

ECO Newton TS-51 ▪ Door closer with slide rail

Product information

Closing force 1- 4, tested acc. to **EN 1154 A** (for door widths up to 1.100 mm) continuously adjustable. Latching speed, closing speed and back-check continuously adjustable. Same version DIN left and DIN right.Mounting height with mounting plate only 46 mm. Door opening angle: 180°

- ECOunity: Standard mounting and head mounting on hinge side and hinge-opposite side
- ECOphysis: Door closer and slide rail build a unit in aluminium and stainless steel
- ECOclic: The stainless steel cover encloses the aluminium body with the power of spring steel and conceals all of the adjusting elements, thus securing the closer against unauthorized access.
- ECOmount: Mounting plate according to **EN 1154** is completely covered by the door closer
- ECOvalve: Simple, high-precision and permanently secure adjustment of all parameters of the closing process with one conventional Allen key.
- ECOcover[2]: Optional stainless steel cover for the ECO Newton door closers and related slide rails. Please order the lever arm in stainless steel look for the perfect overall appearance.
- ECOline: The mounted slide rail and door closer are flush when the door is closed. The colours of all materials are perfectly matched - right down to the end caps of the slide rail.
- ECOvario: permits the use of all slide rail door closers and can even be combined with different door leaf widths. In this way, optimum value for money can be achieved for each individual door situation.

Delivery with slide rail B and mounting plate as standard.

Article numbers

Hinge side slide rail B		Colour		Article number
TS-51 B	(1-4)	Silver	RAL 9006*	305153EA1A01010
TS-51 B	(1-4)	White	RAL 9016	305153EA3E01010
TS-51 B	(1-4)	Brown	RAL 8014	305153EA3D01010
TS-51 B	(1-4)	Black	RAL 9005	305153EA3G01010

Hinge side without slide rail		Colour		Article number
TS-51 B	(1-4)	Silver	RAL 9006*	355153EA1A00010
TS-51 B	(1-4)	White	RAL 9016	355153EA3E00010
TS-51 B	(1-4)	Brown	RAL 8014	355153EA3D00010
TS-51 B	(1-4)	Black	RAL 9005	355153EA3G00010

Hinge-opposite side slide rail B		Colour		Article number
TS-51 G	(1-4)	Silver	RAL 9006*	305163EA1A01010
TS-51 G	(1-4)	White	RAL 9016	305163EA3E01010
TS-51 G	(1-4)	Brown	RAL 8014	305163EA3D01010
TS-51 G	(1-4)	Black	RAL 9005	305163EA3G01010

Hinge-opposite side without slide rail		Colour		Article number
TS-51 G	(1-4)	Silver	RAL 9006*	355163EA1A00010
TS-51 G	(1-4)	White	RAL 9016	355163EA3E00010
TS-51 G	(1-4)	Brown	RAL 8014	355163EA3D00010
TS-51 G	(1-4)	Black	RAL 9005	355163EA3G00010

*Door closer body in silver RAL 9006, ECOclic stainless steel satin or polished as option

SWISSDOOR
DØRTEKNIK FOR PROFESSIONELLE

ECO MOUNT

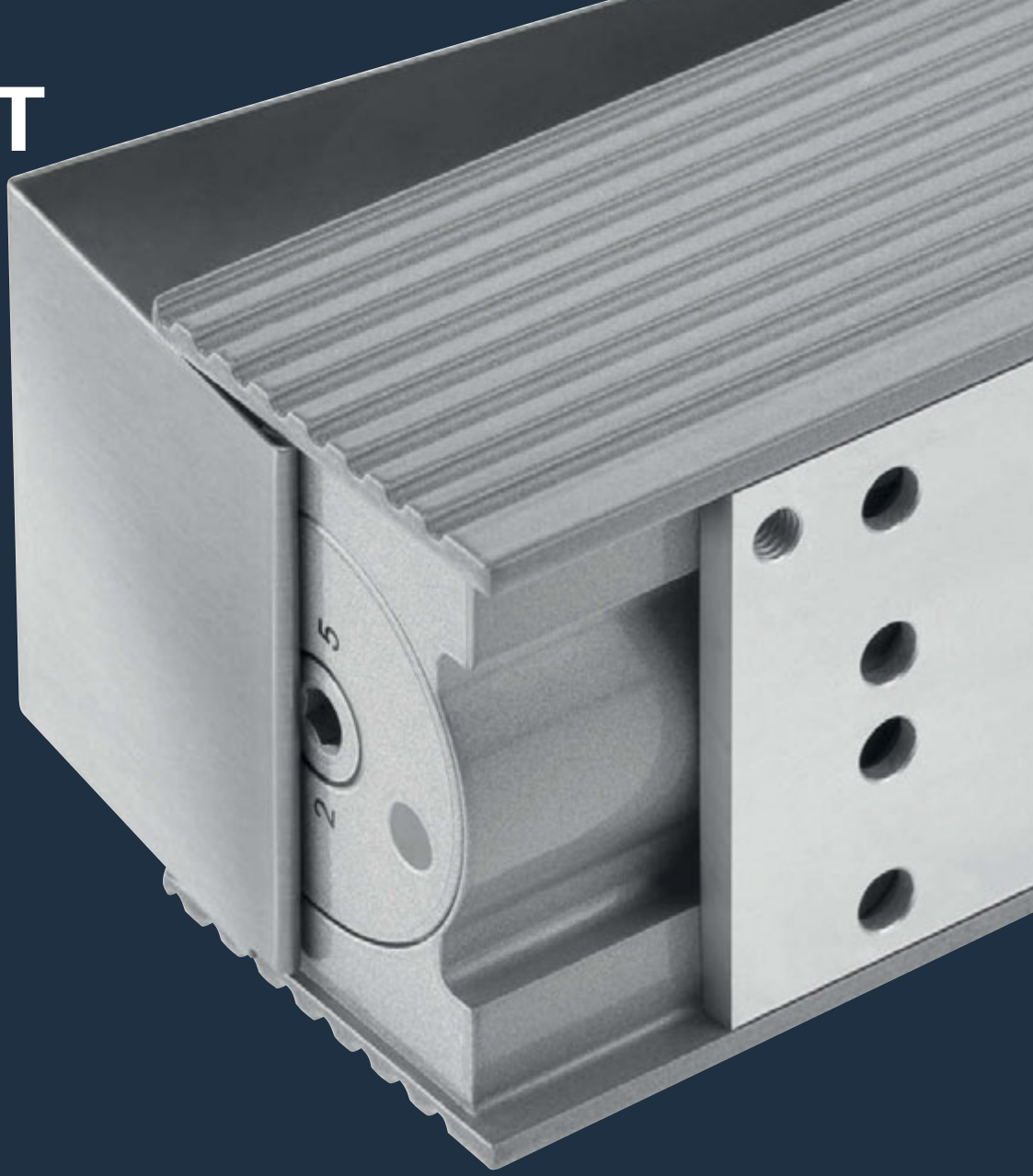

ECO **Newton**
Highlights in detail.

Well-conceived assembly system

The special feature of the ECO Newton assembly system is that the mounting plate is completely concealed by the aluminium body of the closer, thus making it invisible. The mounting plate has standardized drill holes which guarantee time-saving, secure and simple attachment.

Swissdoor ApS • Stenhuggervej 2 • 5471 Søndersø • Danmark Telefon +45 86 28 00 00 • mail@swissdoor.dk • www.swissdoor.dk

Hinge side

Mounting with slide rail B, illustration DIN left-door, DIN right laterally reversed

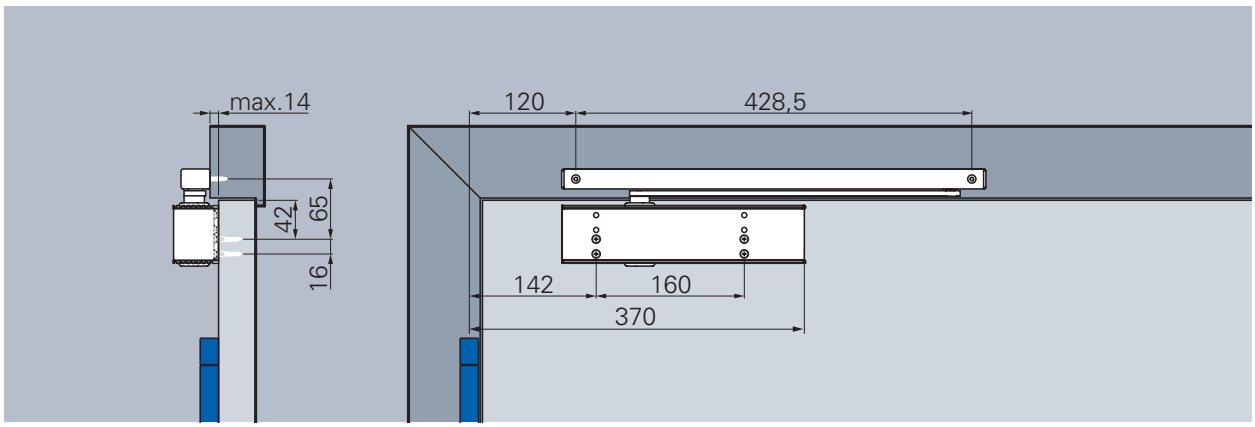

Standard mounting with slide rail B, hinge side

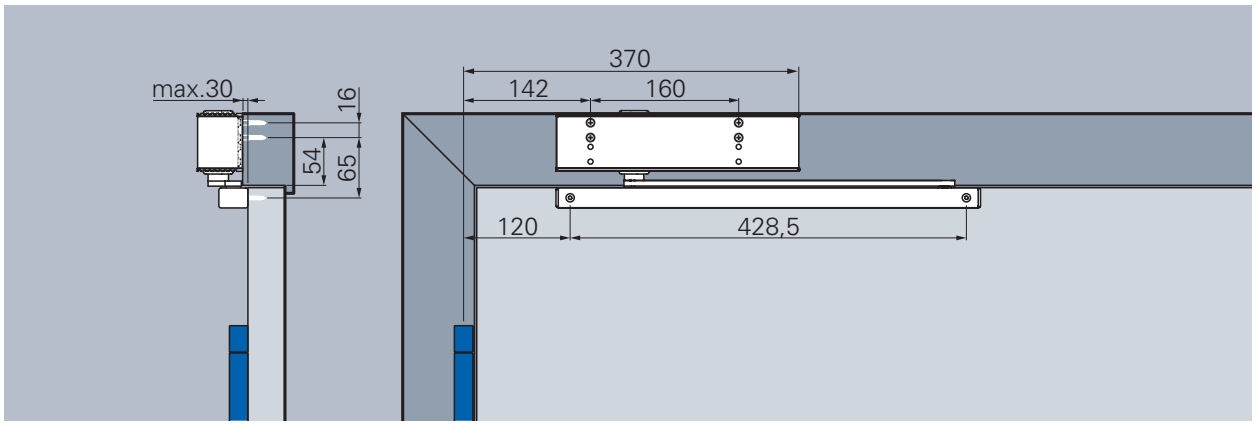

Head mounting with slide rail B, hinge side

Closing speed
Continuously adjustable closing speed from approx. 180° to 0°.

Latching speed
Increases the closing speed and thus the safe closing of the door, for example to overcome door seals, door locks and high air pressure.
Continously adjustable, works between 10 to 0°

Back-check
Reduces the opening speed starting at 70° and avoids the slamming of the door.
Back-check continously adjustable

Closing force diagram ECO Newton TS-51, hinge side

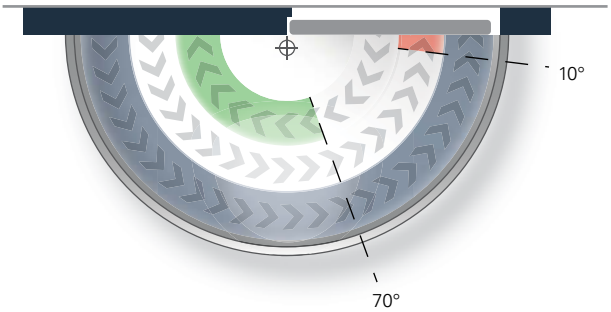

Closing force:	
Continuously adjustable	min. size 1 max. size 4
Default delivery condition:	size 3

Swissdoor ApS • Stenhuggervej 2 • 5471 Søndersø • Danmark Telefon +45 86 28 00 00 • mail@swissdoor.dk • www.swissdoor.dk

Hinge-opposite side

Mounting with slide rail B, illustration DIN right-door, DIN right laterally reversed

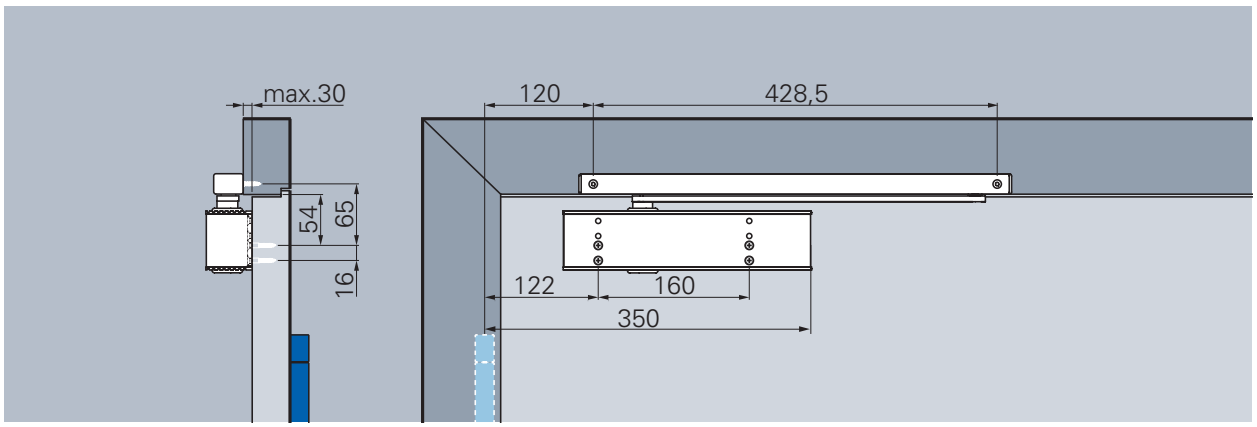

Standard mounting with slide rail B, hinge-opposite side

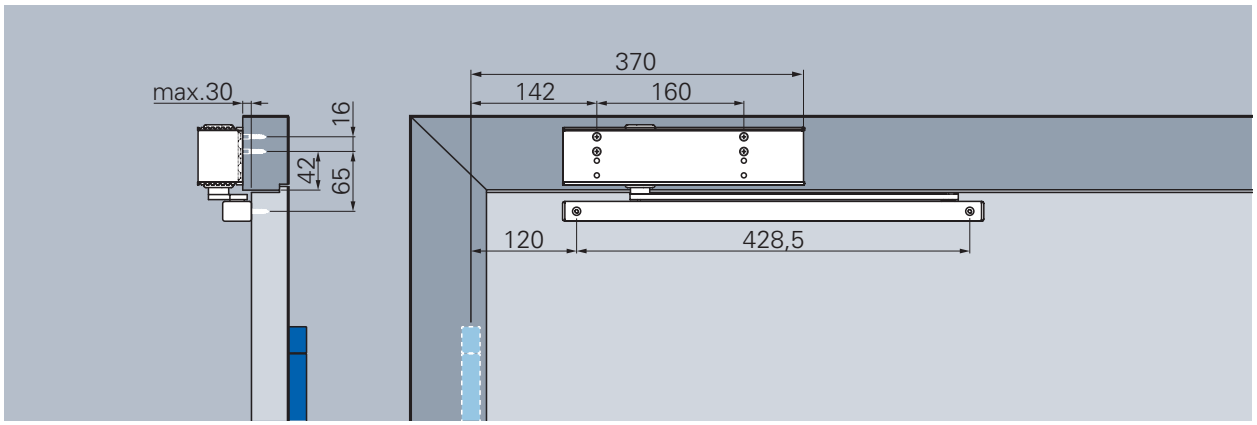

Head mounting with slide rail B, hinge-opposite side

Closing speed
Continuously adjustable closing speed from approx. 140° to 0°.

Latching speed
Increases the closing speed and thus the safe closing of the door, for example to overcome door seals, door locks and high air pressure.
Continously adjustable, works between 10 to 0°

Back-check
Reduces the opening speed starting at 70° and avoids the slamming of the door.
Back-check continously adjustable

Note!:
Back-check out of order for head-mounting / mounting on hinge-opposite side

Closing force diagram ECO Newton TS-51, hinge-opposite side

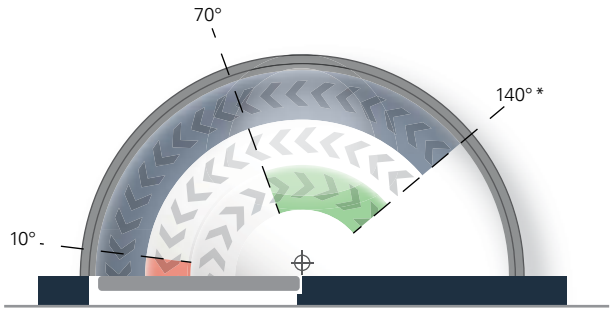

*Varies according to door thickness and type of hinge

A door stopper for opening limit is a must!

ECO Newton TS-41

Swissdoor ApS • Stenhuggervej 2 • 5471 Søndersø • Danmark Telefon +45 86 28 00 00 • mail@swissdoor.dk • www.swissdoor.dk

ECO **Newton TS-41**

EN 1154 A F CE

ECO

Product characteristics

Closing force (continuously adjustable)	Size acc. to EN	1 – 4
Door width	acc. to EN ≤ 1.100 mm	■
Dimensions (incl. mounting plate)	Length in mm Depth in mm Height in mm	243 41 56
Mounting plate acc. to **EN 1154 A** (supplemetary sheet 1) with GS B		◘
Hinge-side and hinge-opposite side		■
DIN left / right		■
Latching speed (continuously adjustable)		■
Closing speed (continuously adjustable)		■
Back-check (constant)		■
Delayed action (continuously adjustable)		-
Tested acc. to EN		EN 1154 A
Suitable for fire- and smoke control doors		F
Certified according to EU-Directive		CE

■ Yes
- No
◘ Option

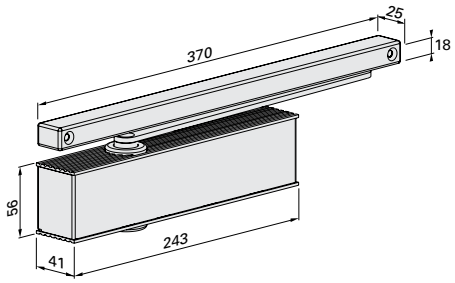

Dimensions: TS-41 with slide rail K

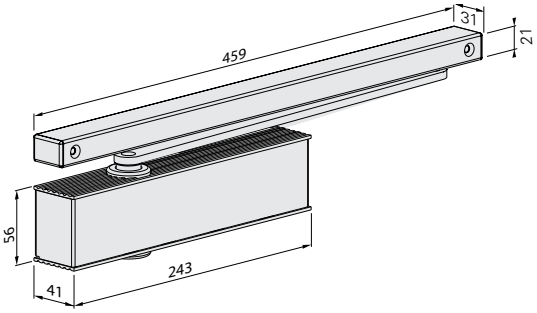

Dimensions: TS-41 with slide rail B

ECO Newton TS-41 ▪ Highlights at a glance

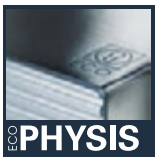

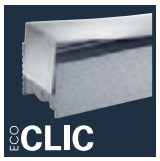

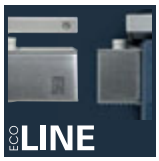

*optional

Details regarding the ECO Newton Highlights can be found in the intro of this chapter.

Body: Silver RAL 9006
ECOclic: Stainless steel polished or satin

Body + ECOclic:
White RAL 9016

Body + ECOclic:
Black RAL 9005

Body + ECOclic:
Brown RAL 8014

Slide rail and arm are always delivered in the same colour as the ordered door closer body.

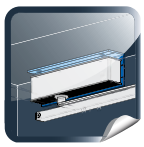

Under-lintel angle for door closer
Page 165

Under-lintel angle for slide rail
Page 165

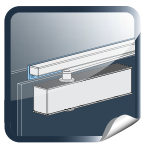

Adaptor profile
Page 167

Glass clamping device on page 166.

Order information

ECO Newton TS-41 ▪ Door closer with slide rail

Product information

Closing force 1- 4, tested acc. to **EN 1154 A** (for door width up to 1.100 mm) continuously adjustable. Latching speed and closing speed continuously adjustable. Back-check fixed. Same version DIN left and DIN right. Mounting height only 41 mm. Weight: 1.380g. Max. door opening angle: 180°

- ECOunity: Standard mounting and head mounting on hinge side and hinge-opposite side. One execution for all four mounting types
- ECOphysis: Door closer and slide rail build a unit in aluminium and stainless steel
- ECOclic: The stainless steel cover encloses the aluminium body with the power of spring steel and conceals all of the adjusting elements, thus securing the closer against unauthorized access.
- ECOmount: Mounting plate as option, according to **EN 1154**, supplementary sheet 1 - only with slide rail B
- ECOvalve: Simple, high-precision and permanently secure adjustment of all parameters of the closing process with one conventional Allen key.
- ECOcover[2]: Optional stainless steel covering for the ECO Newton door closers and related slide rails. Please order the lever arm for the perfect overall appearance.
- ECOgreen: The intelligent construction and carefully planned use of materials help considerably to save re-sources
- ECOline: The mounted slide rail and door closer are flush when the door is closed. The colours of all materials are perfectly matched - right downto the end caps of the slide rail.
- ECOvario: permits the use of all slide rail door closers and can even be combined with different door leaf widths. In this way, optimum value for money can be achieved for each individual door situation.

When ordering a closing sequence selector, please order the respective arm B for ECO Newton TS-41 (please refer to page 163).

Article numbers

Door closer slide rail K		Colour		Article number
TS-41 K	(1-4)	Silver	RAL 9006*	304152F11A00910
TS-41 K	(1-4)	White	RAL 9016	304152F11E00910
TS-41 K	(1-4)	Brown	RAL 8014	304152F11D00910
TS-41 K	(1-4)	Black	RAL 9005	304152F11G00910

Door closer without slide rail		Colour		Article number
TS-41	(1-4)	Silver	RAL 9006*	354152F11A00010
TS-41	(1-4)	White	RAL 9016	354152F11E00010
TS-41	(1-4)	Brown	RAL 8014	354152F11D00010
TS-41	(1-4)	Black	RAL 9005	354152F11G00010

Door closer slide rail B		Colour		Article number
TS-41 B	(1-4)	Silver	RAL 9006*	354152F11A00010 + 350120000A00500
TS-41 B	(1-4)	White	RAL 9016	354152F11E00010 + 350120000E00500
TS-41 B	(1-4)	Brown	RAL 8014	354152F11D00010 + 350120000D00500
TS-41 B	(1-4)	Black	RAL 9005	354152F11G00010 + 350120000G00500

*Door closer body in silver RAL 9006, ECOclic stainless steel satin, polished on request

SWISSDOOR
DØRTEKNIK FOR PROFESSIONELLE

ECO LINE

ECO Newton
Highlights in detail.

Uniform edges and colour design:

The mounted slide rail and door closer are flush when the door is closed. The colours of all materials are perfectly matched - right down to the end caps of the slide rail. In this way, ECO Newton door closers can be integrated harmoniously into every design context.

Swissdoor ApS • Stenhuggervej 2 • 5471 Søndersø • Danmark Telefon +45 86 28 00 00 • mail@swissdoor.dk • www.swissdoor.dk

Hinge side

Mounting with slide rail B, illustration DIN left-door, DIN right laterally reversed

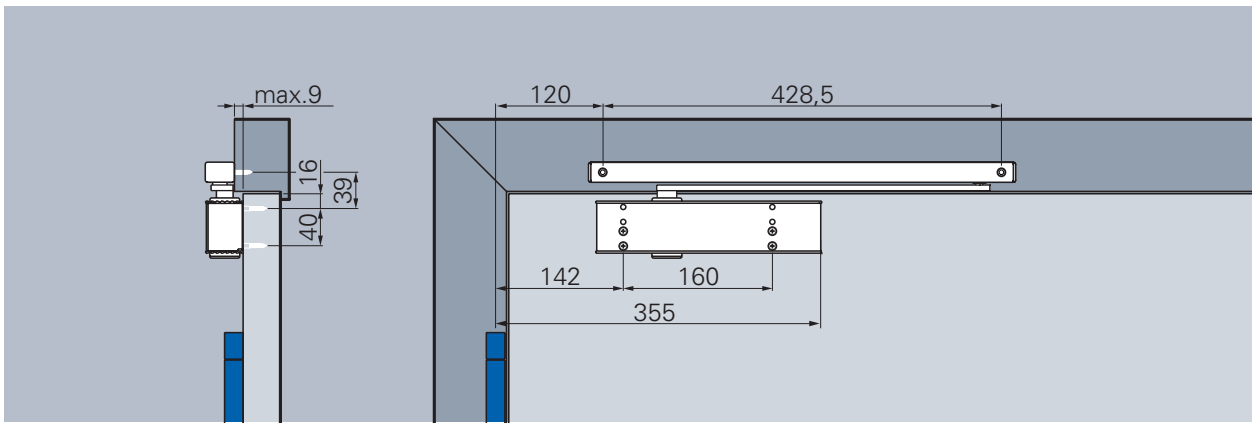

Standard mounting with slide rail B, hinge side (with optional mounting plate with DIN holes)

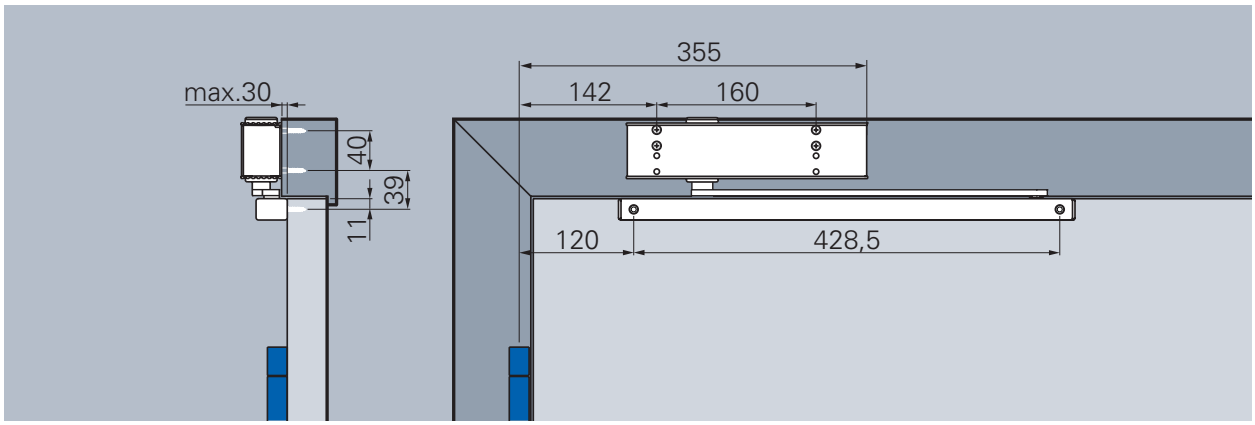

Head mounting with slide rail B, hinge side (with optional mounting plate with DIN holes)

Closing speed
Continuously adjustable closing speed from approx. 180° to 0°.

Latching speed
Increases the closing speed and thus the safe closing of the door, for example to overcome door seals, door locks and high air pressure.
Continously adjustable, works between 10 to 0°

Back-check
Reduces the opening speed starting at 70° and avoids the slamming of the door.
Back-check fixed.

Closing force diagram ECO Newton TS-41, hinge side

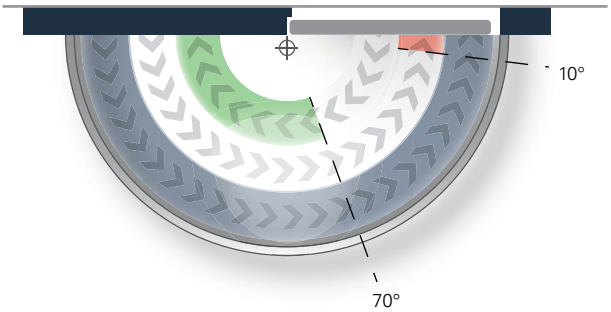

Closing force:	
Continuously adjustable	min. size 1 max. size 4
Default delivery condition:	size 3

Swissdoor ApS • Stenhuggervej 2 • 5471 Søndersø • Danmark Telefon +45 86 28 00 00 • mail@swissdoor.dk • www.swissdoor.dk

Hinge-opposite side

Mounting with slide rail B, illustration DIN right-door, DIN right laterally reversed

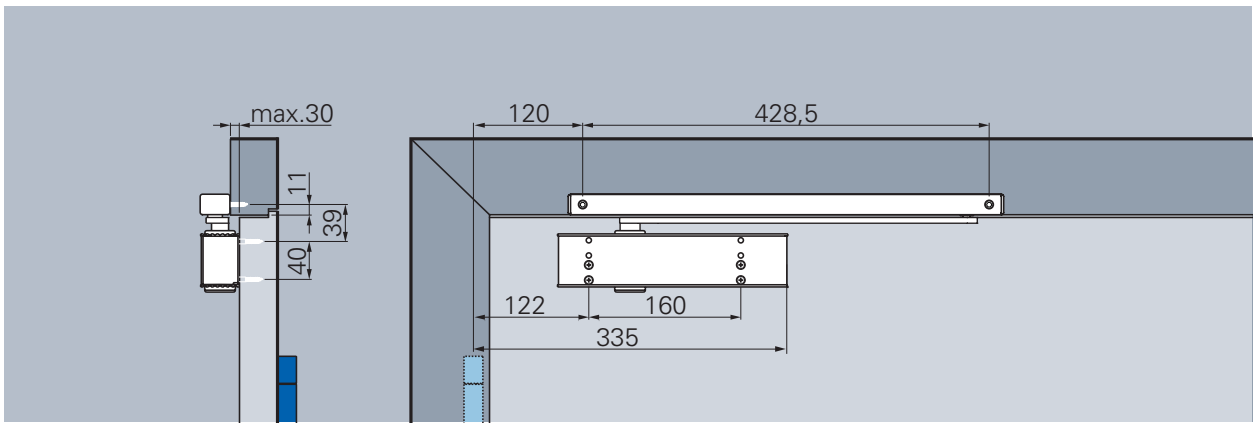

Standard mounting with slide rail B, hinge-opposite side (with optional mounting plate with DIN holes)

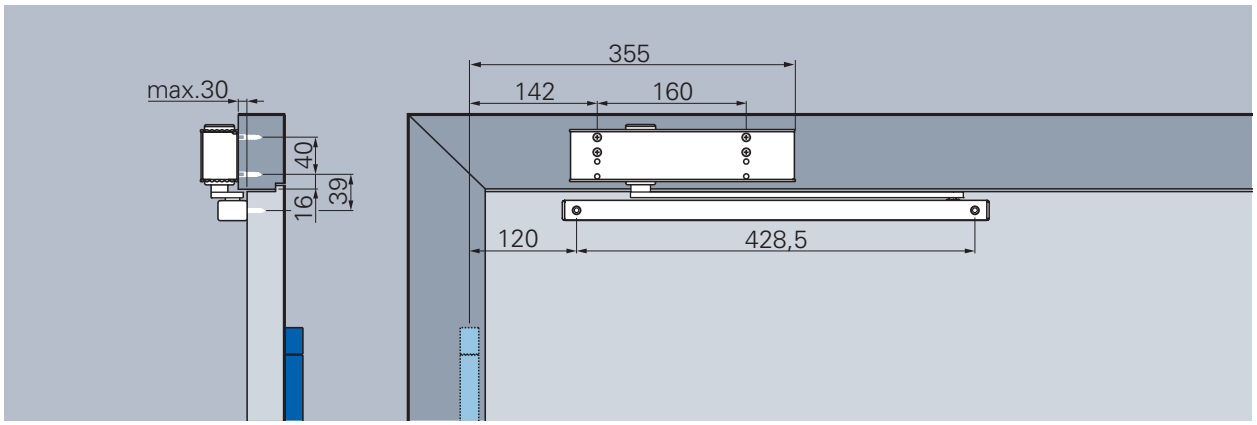

Head mounting with slide rail B, hinge-opposite side (with optional mounting plate with DIN holes)

Closing speed
Continuously adjustable closing speed from approx. 140° to 0°.

Latching speed
Increases the closing speed and thus the safe closing of the door, for example to overcome door seals, door locks and high air pressure.
Continously adjustable, works between 10 to 0°

Back-check
Reduces the opening speed starting at 70° and avoids the slamming of the door.
Back-check fixed

Note!:
Back-check out of order for head-mounting / mounting on hinge-opposite side

Closing force diagram ECO Newton TS-41, hinge-opposite side

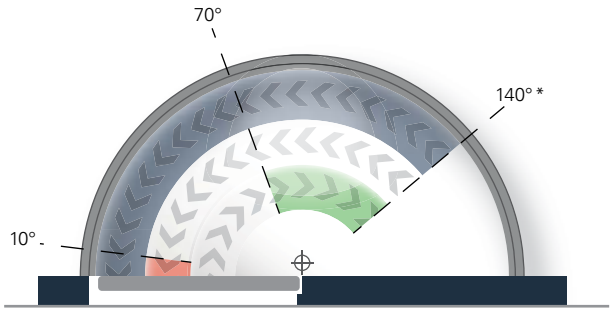

*Varies according to door thickness and type of hinge

A door stopper for opening limit is a must!

Hinge side

Mounting with slide rail K, illustration DIN left-door, DIN right laterally reversed

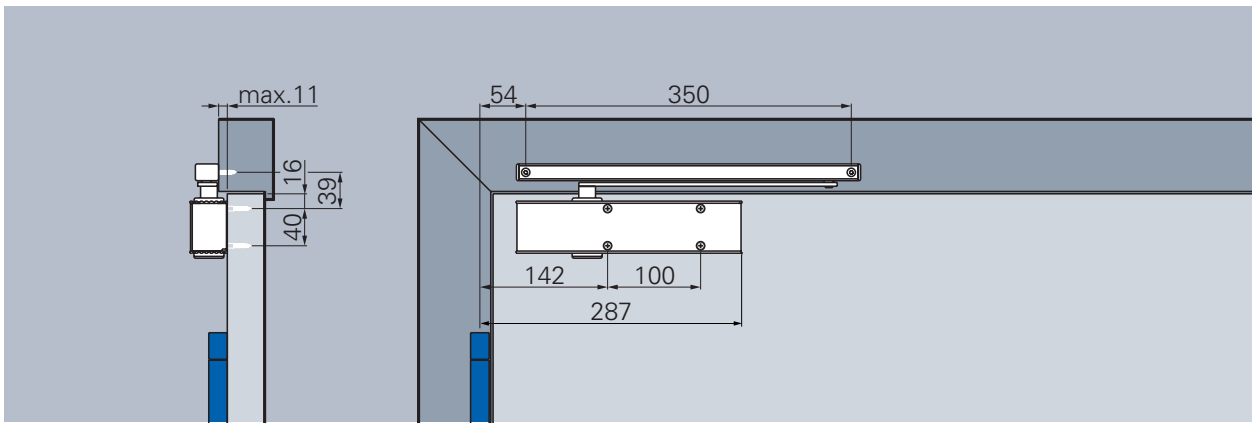

Standard mounting with slide rail K, hinge side (direct mounting, without mounting plate)

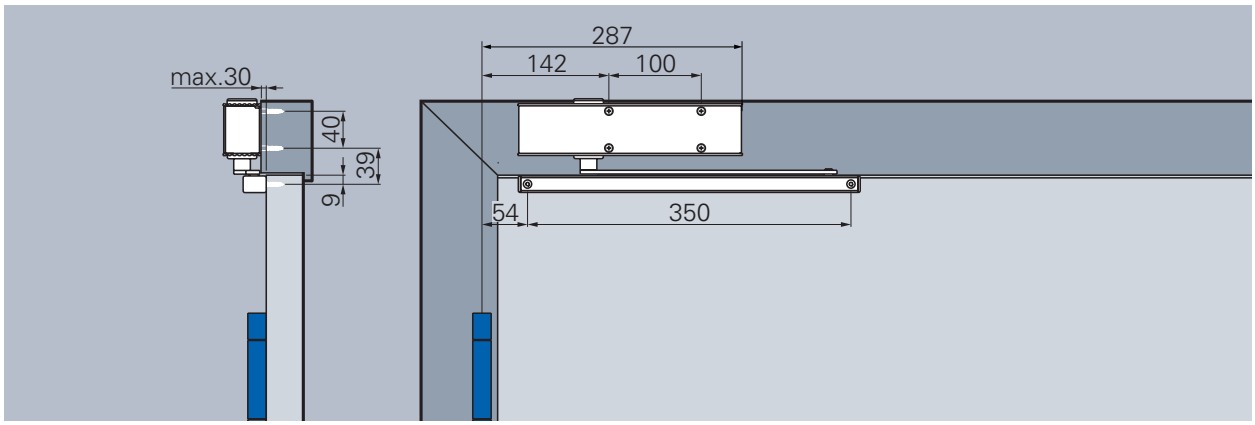

Head mounting with slide rail K, hinge side (direct mounting, without mounting plate)

Closing speed
Continuously adjustable closing speed from approx. 180° to 0°.

Latching speed
Increases the closing speed and thus the safe closing of the door, for example to overcome door seals, door locks and high air pressure.
Continously adjustable, works between 10 to 0°

Back-check
Reduces the opening speed starting at 70° and avoids the slamming of the door.
Back-check fixed

Closing force diagram ECO Newton TS-41, hinge side

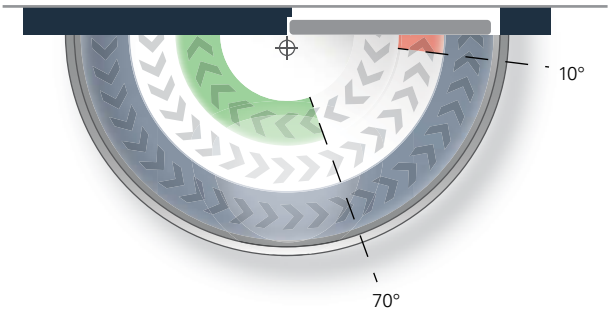

Closing force:	
Continuously adjustable	min. size 1 max. size 4
Default delivery condition:	size 3

Swissdoor ApS • Stenhuggervej 2 • 5471 Søndersø • Danmark Telefon +45 86 28 00 00 • mail@swissdoor.dk • www.swissdoor.dk

Hinge-opposite side

Mounting with slide rail K, illustration DIN right-door, DIN right laterally reversed

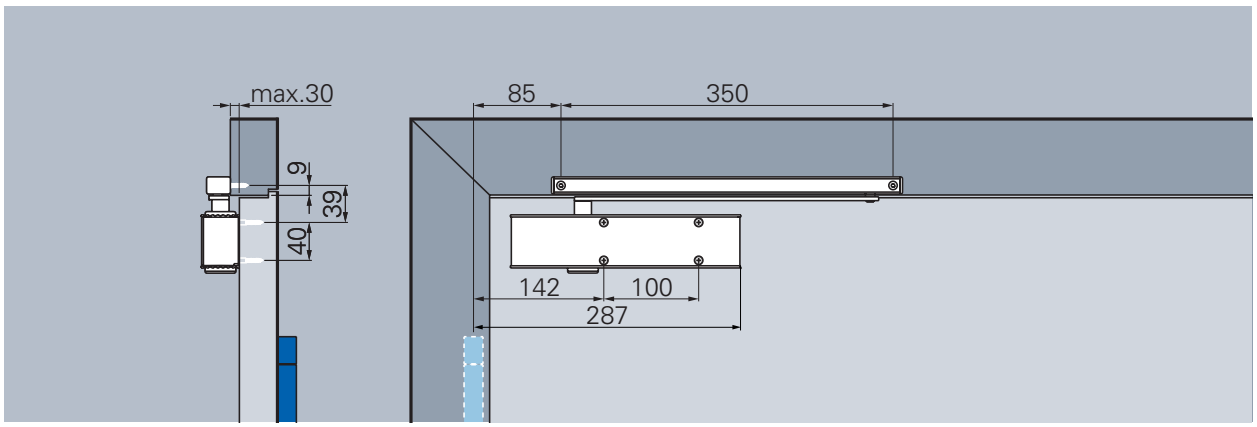

Standard mounting with slide rail K, hinge-opposite side (direct mounting, without mounting plate)

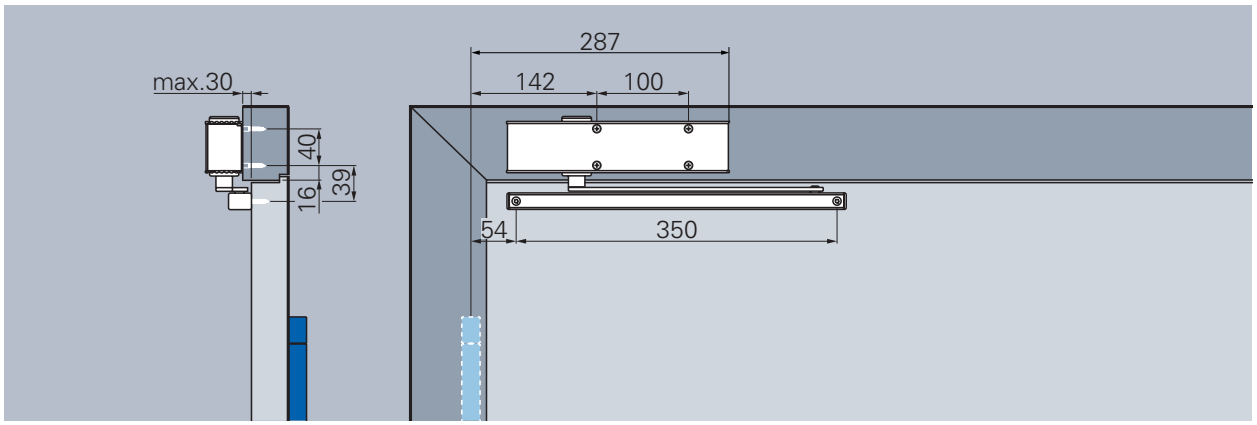

Head mounting with slide rail K, hinge-opposite side (direct mounting, without mounting plate)

Closing speed
Continuously adjustable closing speed from approx. 140° to 0°.

Latching speed
Increases the closing speed and thus the safe closing of the door, for example to overcome door seals, door locks and high air pressure.
Continously adjustable, works between 10 to 0°

Back-check
Reduces the opening speed starting at 70° and avoids the slamming of the door.
Back-check fixed

Note!:
Back-check out of order for head-mounting / mounting on hinge-opposite side

Closing force diagram ECO Newton TS-41, hinge-opposite side

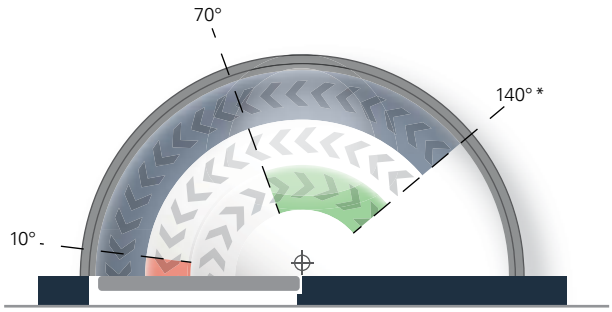

*Varies according to door thickness and type of hinge

A door stopper for opening limit is a must!

ECO Newton TS-31

Swissdoor ApS • Stenhuggervej 2 • 5471 Søndersø • Danmark Telefon +45 86 28 00 00 • mail@swissdoor.dk • www.swissdoor.dk

ECO **Newton TS-31**

EN 1154 A F CE

ECO

Product characteristics

Closing force (continuously adjustable)	Size acc. to EN	1 – 3
Door width	acc. to EN ≤ 950 mm	■
Dimensions (incl. mounting plate)	Length in mm Depth in mm Height in mm	243 41 56
Mounting plate acc. to **EN 1154 A** (supplemetary sheet 1) with GS B		◘
Hinge-side and hinge-opposite side		■
DIN left / right		■
Latching speed (continuously adjustable)		■
Closing speed (continuously adjustable)		■
Back-check (constant)		■
Delayed action (continuously adjustable)		-
Tested acc. to EN		EN 1154 A
Suitable for fire- and smoke control doors		F
Certified according to EU-Directive		CE

■ Yes
- No
◘ Option

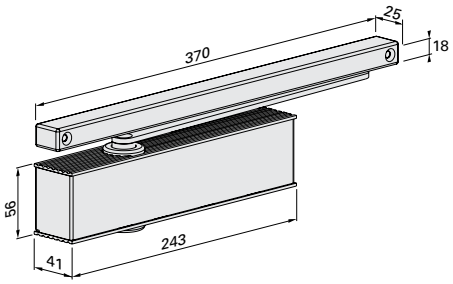

Dimensions: TS-31 with slide rail K

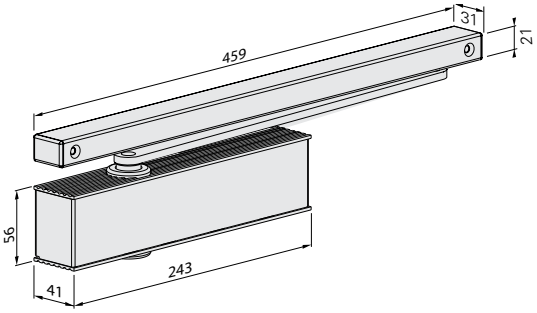

Dimensions: TS-31 with slide rail B

ECO Newton TS-31 ▪ Highlights at a glance

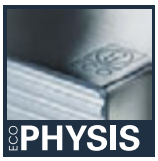

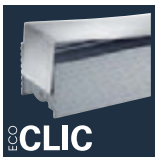

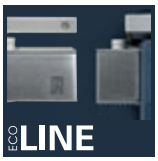

*optional

Details regarding the ECO Newton Highlights can be found in the intro of this chapter.

Body: Silver RAL 9006
ECOclic: Stainless steel polished or satin

Body + ECOclic:
White RAL 9016

Body + ECOclic:
Black RAL 9005

Body + ECOclic:
Brown RAL 8014

Slide rail and arm are always delivered in the same colour as the ordered door closer body.

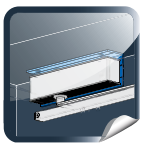

Under-lintel angle for door closer
Page 165

Under-lintel angle for slide rail
Page 165

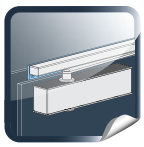

Adaptor profile
Page 167

Order information

ECO Newton TS-31 ▪ Door closer with slide rail

Product information

Closing force 1- 3, tested acc. to **EN 1154 A** (for door widths up to 950 mm) continuously adjustable. Latching speed and closing speed continuously adjustable from the side. Same version DIN left and DIN right. Mounting height only 41 mm. Weight: 1.380. Max. door opening angle: 180°

- ECOunity: Standard mounting and head mounting on hinge side and hinge-opposite side. One execution for all four mounting types
- ECOphysis: Door closer and slide rail build a unit in aluminium and stainless steel
- ECOclic: The stainless steel cover encloses the aluminium body with the power of spring steel and conceals all of the adjusting elements, thus securing the closer against unauthorized access.
- ECOmount: Optional mounting plate according to **EN 1154**, supplementary sheet 1 - only with slide rail B
- ECOvalve: Simple, high-precision and permanently secure adjustment of all parameters of the closing process with one conventional Allen key.
- ECOcover[2]: Optional stainless steel cover for the ECO Newton door closers and related slide rails. Please order the lever arm in stainless steel look for the perfect overall appearance.
- ECOgreen: The intelligent construction and carefully planned use of materials help considerably to save resources
- ECOline: The mounted slide rail and door closer are flush when the door is closed. The colours of all materials are perfectly matched - right down to the end caps of the slide rail K
- ECOvario: permits the use of all slide rail door closers and can even be combined with different door leaf widths. In this way, optimum value for money can be achieved for each individual door situation.

When ordering a closing sequence selector, please order the respective arm B for ECO Newton TS-31 (please refer to page 163).

Article numbers

Door closer slide rail K		Colour		Article number
TS-31 K	(1-3)	Silver	RAL 9006*	303152F11A09010
TS-31 K	(1-3)	White	RAL 9016	303152F11E09010
TS-31 K	(1-3)	Brown	RAL 8014	303152F11D09010
TS-31 K	(1-3)	Black	RAL 9005	303152F11G09010

Door closer without slide rail		Colour		Article number
TS-31	(1-3)	Silver	RAL 9006*	353152F11A00010
TS-31	(1-3)	White	RAL 9016	353152F11E00010
TS-31	(1-3)	Brown	RAL 8014	353152F11D00010
TS-31	(1-3)	Black	RAL 9005	353152F11G00010

Door closer slide rail B		Colour		Article number
TS-31 B	(1-3)	Silver	RAL 9006*	353152F11A00010 + 350120000A00500
TS-31 B	(1-3)	White	RAL 9016	353152F11E00010 + 350120000E00500
TS-31 B	(1-3)	Brown	RAL 8014	353152F11D00010 + 350120000D00500
TS-31 B	(1-3)	Black	RAL 9005	353152F11G00010 + 350120000G00500

*Door closer body in silver RAL 9006, ECOclic stainless steel satin, polished on request

SWISSDOOR
DØRTEKNIK FOR PROFESSIONELLE

ECO COVER²

ECO Newton
Highlights in detail.

Stainless steel full cover:

The full cover is an optional stainless steel cover for the ECO Newton door closers and related slide rails. The overall appearance is perfected by a lever arm with a stainless steel look. A cover for the closer body is available for standard arm door closers.

Swissdoor ApS • Stenhuggervej 2 • 5471 Søndersø • Danmark Telefon +45 86 28 00 00 • mail@swissdoor.dk • www.swissdoor.dk

Hinge side

Mounting with slide rail B, illustration DIN left-door, DIN right laterally reversed

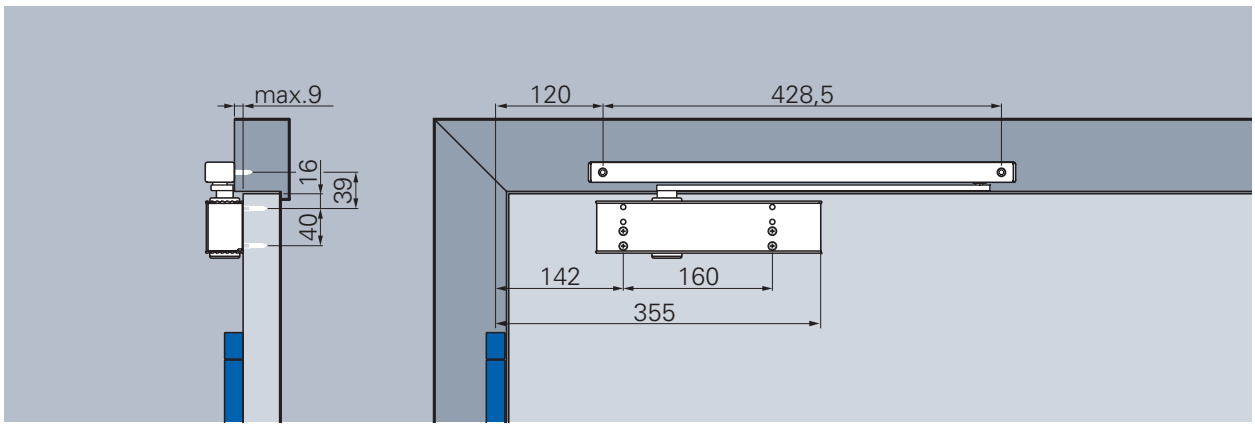

Standard mounting with slide rail B, hinge side (with optional mounting plate with DIN holes)

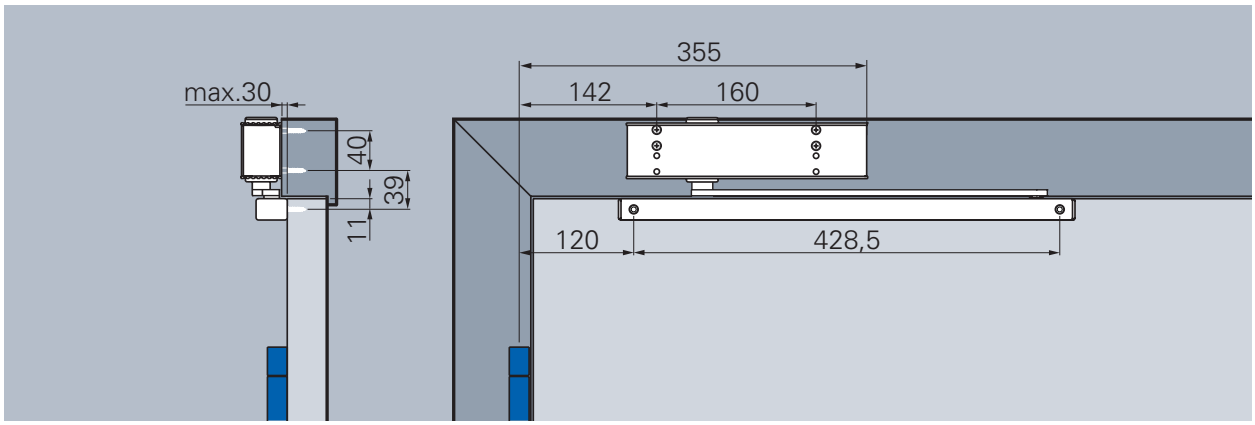

Head mounting with slide rail B, hinge side (with optional mounting plate with DIN holes)

Closing speed
Continuously adjustable closing speed from approx. 180° to 0°.

Latching speed
Increases the closing speed and thus the safe closing of the door, for example to overcome door seals, door locks and high air pressure.
Continously adjustable, works between 10 to 0°

Back-check
Reduces the opening speed starting at 70° and avoids the slamming of the door.
Back-check continously adjustable

Closing force diagram ECO Newton TS-31, hinge side

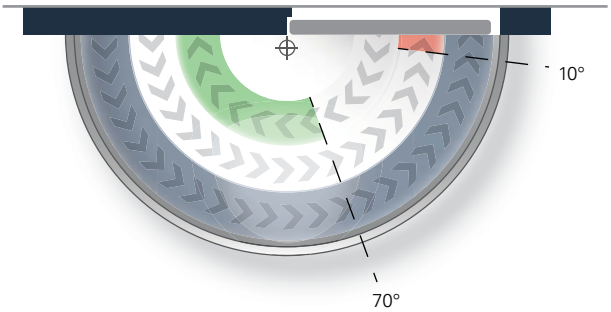

Closing force:	
Continuously adjustable	min. size 1 max. size 3
Default delivery condition:	size 3

Swissdoor ApS • Stenhuggervej 2 • 5471 Søndersø • Danmark Telefon +45 86 28 00 00 • mail@swissdoor.dk • www.swissdoor.dk

Hinge-opposite side

Mounting with slide rail B, illustration DIN right-door, DIN right laterally reversed

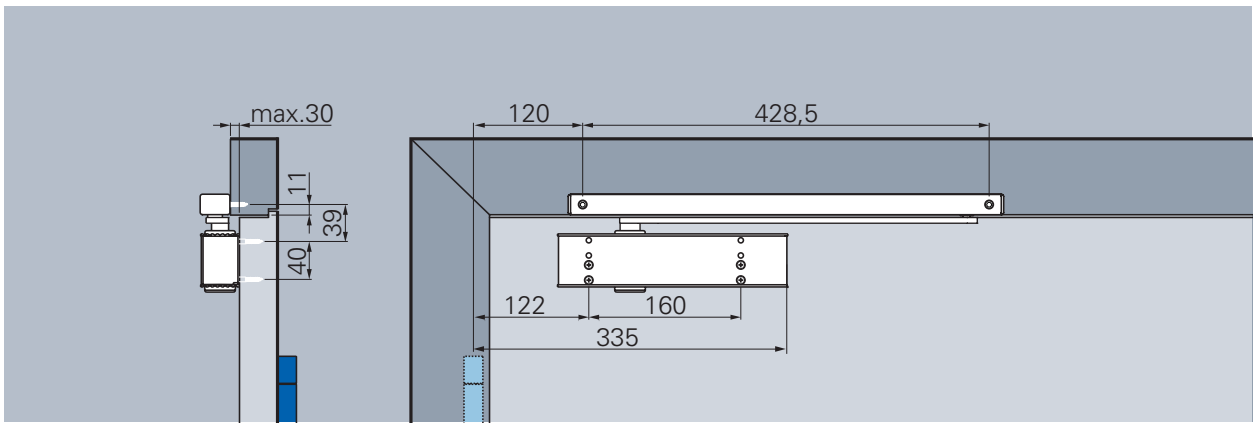

Standard mounting with slide rail B, hinge-opposite side (with optional mounting plate with DIN holes)

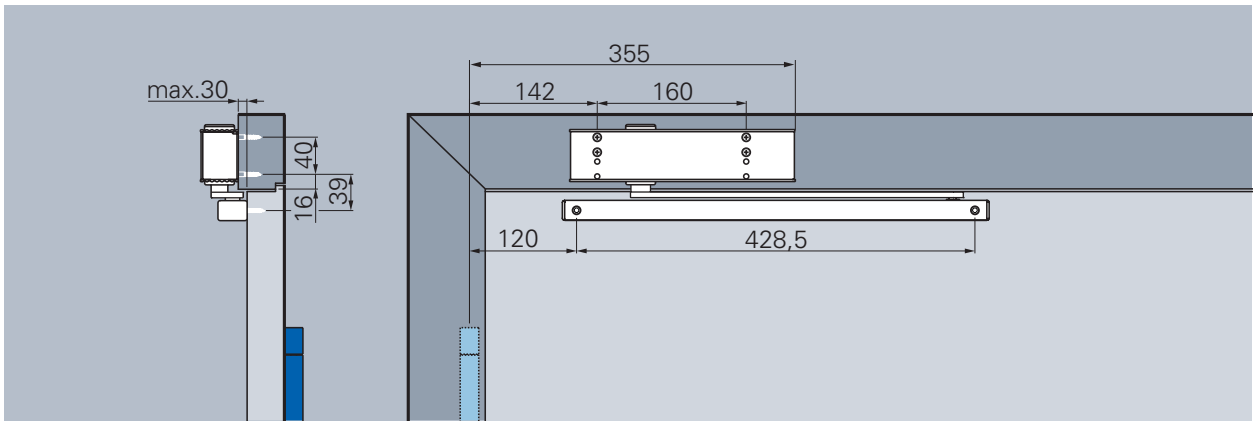

Head mounting with slide rail B, hinge-opposite side (with optional mounting plate with DIN holes)

Closing speed
Continuously adjustable closing speed from approx. 140°* to 0°.

Latching speed
Increases the closing speed and thus the safe closing of the door, for example to overcome door seals, door locks and high air pressure.
Continously adjustable, works between 10 to 0°

Back-check
Reduces the opening speed starting at 70° and avoids the slamming of the door.
Back-check continously adjustable

Note!:
Back-check out of order for head-mounting / mounting on hinge-opposite side

Closing force diagram ECO Newton TS-31, hinge-opposite side

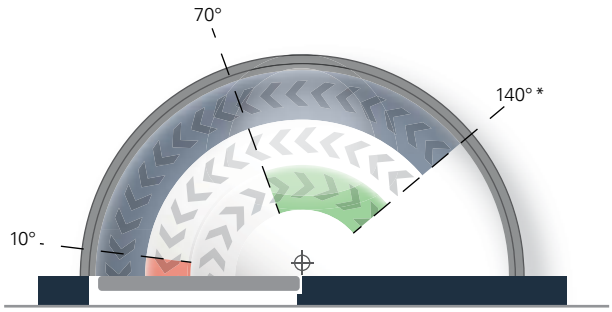

*Varies according to door thickness and type of hinge

A door stopper for opening limit is a must!

Hinge side

Mounting with slide rail K, illustration DIN left-door, DIN right laterally reversed

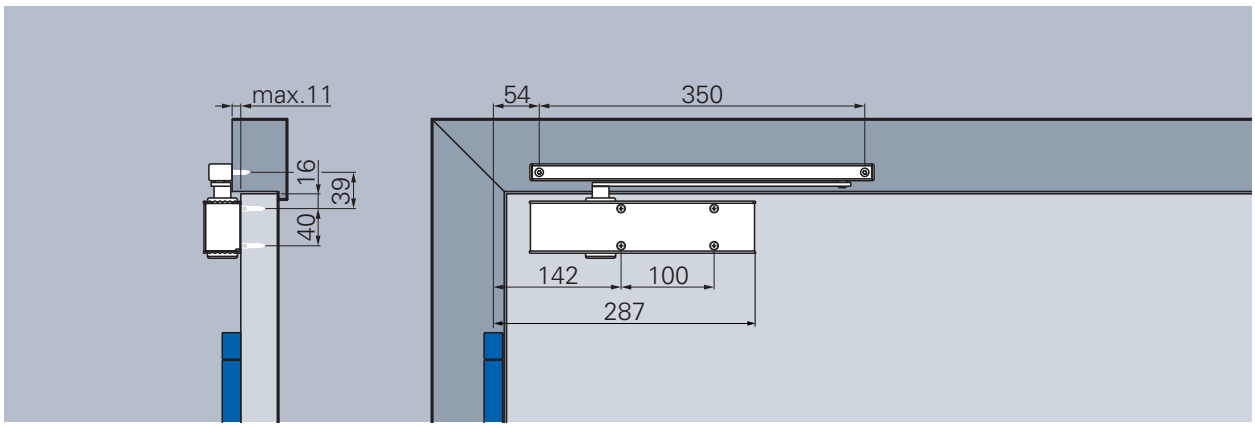

Standard mounting with slide rail K, hinge side (direct mounting, without mounting plate)

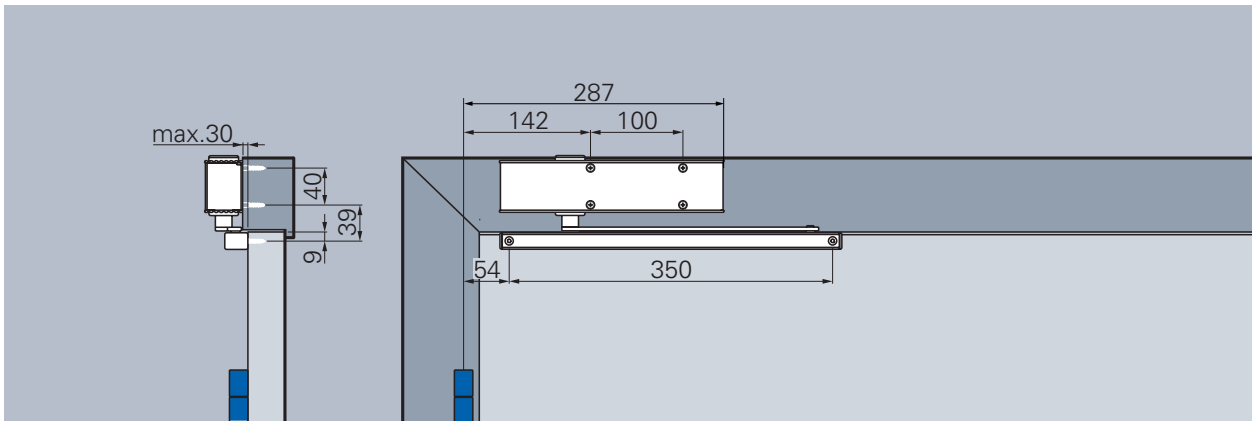

Head mounting with slide rail K, hinge side (direct mounting, without mounting plate)

Closing speed
Continuously adjustable closing speed from approx. 180° to 0°.

Latching speed
Increases the closing speed and thus the safe closing of the door, for example to overcome door seals, door locks and high air pressure.
Continously adjustable, works between 10 to 0°

Back-check
Reduces the opening speed starting at 70° and avoids the slamming of the door.
Back-check fixed

Closing force diagram ECO Newton TS-31, hinge side

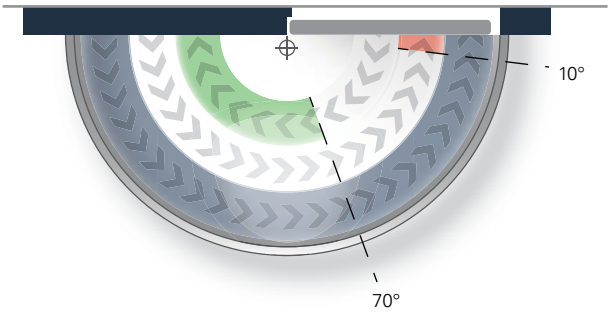

Closing force:	
Continuously adjustable	min. size 1 max. size 3
Default delivery condition:	size 3

Swissdoor ApS • Stenhuggervej 2 • 5471 Søndersø • Danmark Telefon +45 86 28 00 00 • mail@swissdoor.dk • www.swissdoor.dk

Hinge-opposite side

Mounting with slide rail K, illustration DIN right-door, DIN right laterally reversed

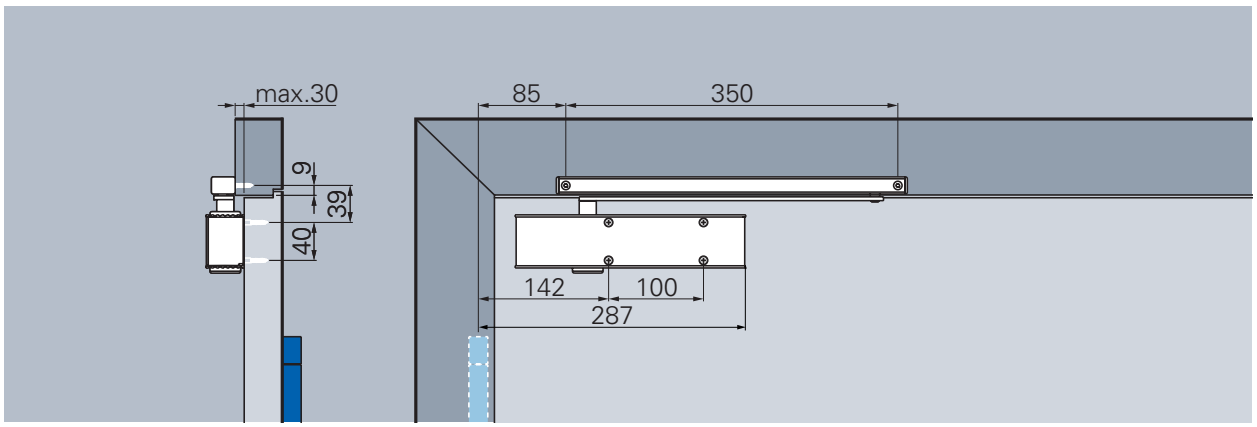

Standard mounting with slide rail K, hinge-opposite side (direct mounting, without mounting plate)

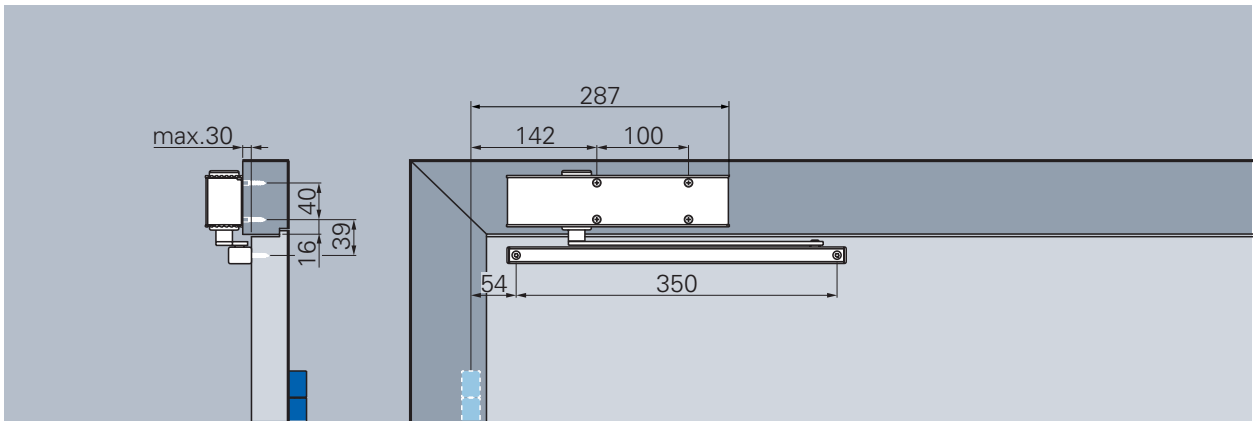

Head mounting with slide rail K, hinge-opposite side (direct mounting, without mounting plate)

Closing speed
Continuously adjustable closing speed from approx. 140°* to 0°.

Latching speed
Increases the closing speed and thus the safe closing of the door, for example to overcome door seals, door locks and high air pressure.
Continously adjustable, works between 10 to 0°

Back-check
Reduces the opening speed starting at 70° and avoids the slamming of the door.
Back-check fixed

Note!:
Back-check out of order for head-mounting / mounting on hinge-opposite side

Closing force diagram ECO Newton TS-31, hinge-opposite side

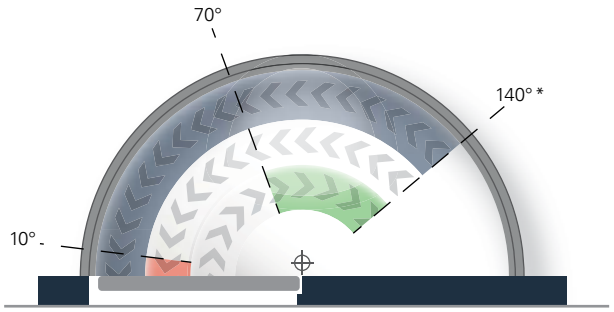

*Varies according to door thickness and type of hinge

A door stopper for opening limit is a must!

ECO Newton slide rails

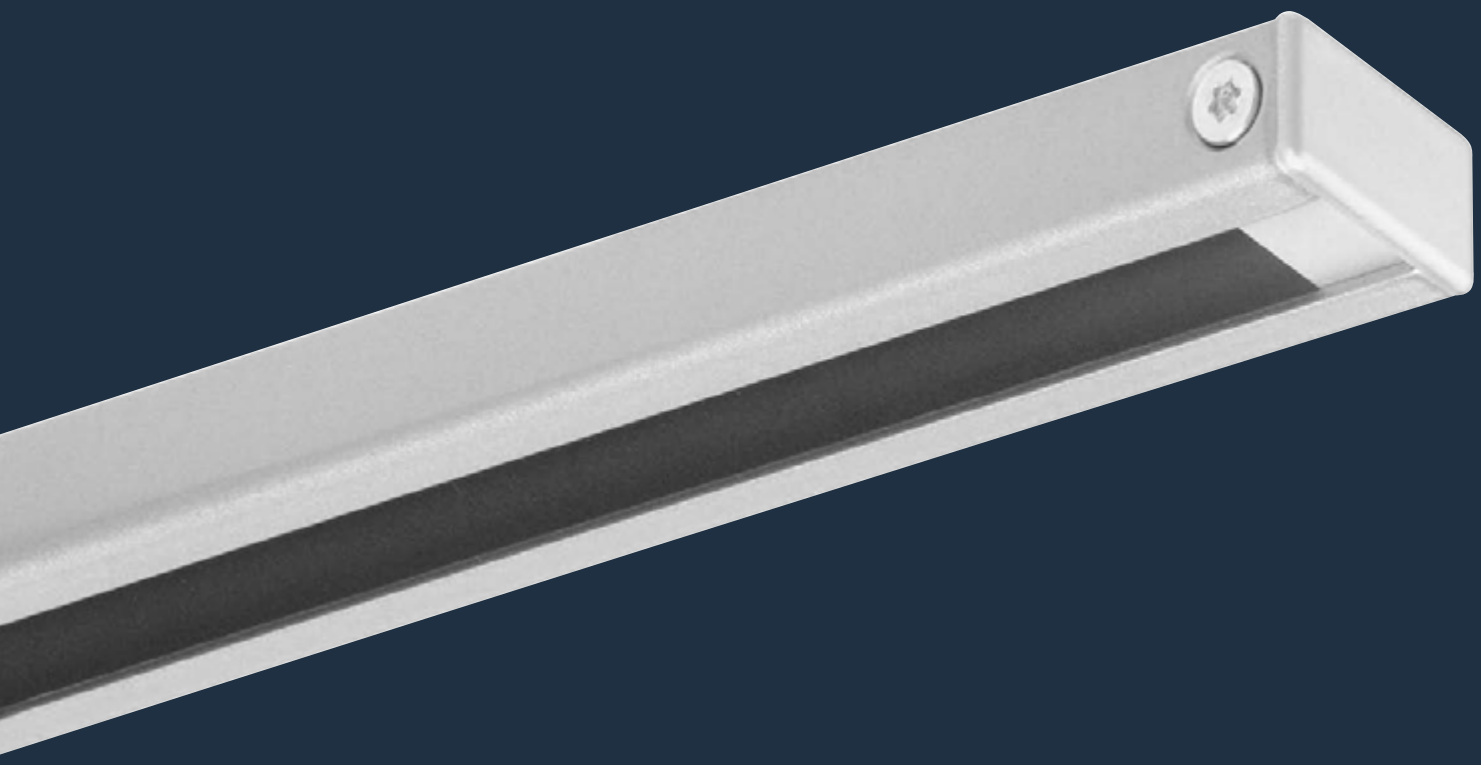

Swissdoor ApS • Stenhuggervej 2 • 5471 Søndersø • Danmark Telefon +45 86 28 00 00 • mail@swissdoor.dk • www.swissdoor.dk

Slide rails for single-leaf doors (surface mounted)

EN 1154 A F CE

ECO

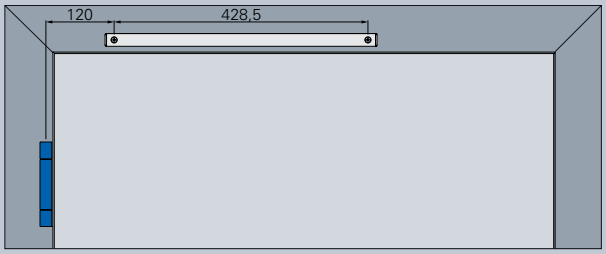

Mounting slide rail B

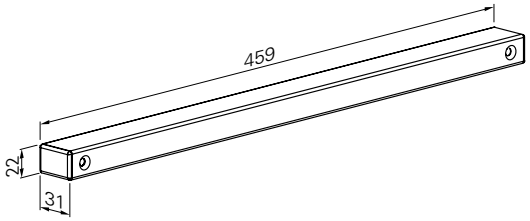

Slide rail B (Basis)

For ECO **Newton TS-61, TS-51, TS-41*, TS-31*** and **Multi-Genius** (surface mounted)

For surface fixed

For the use in fire-protection. Slide rail is tested acc. to **EN 1154 A.** Delivery includes lever arm B for TS-61/51.

Slide rail	Colour		Article number
GS B Si	Silver	RAL 9006	350120000A00010
GS B W	White	RAL 9016	350120000E00010
GS B Br	Brown	RAL 8014	350120000D00010
GS B S	Black	RAL 9005	350120000G00010

Slide rail with mechanical locking device (GS B-FKL)

For ECO **Newton TS-61, TS-51, TS-41*, TS-31*** and **Multi-Genius** (surface mounted)

Hold-open angle adjustable from approx. 70° to 150°.
For surface fixed

This version can be achieved afterwards by using slide rail B and accessory set FKL.
Not suitable for the use in fire-protection. Delivery includes lever arm B for TS-61 / 51.

Slide rail	Colour		Article number
GS B-FKL Si	Silver	RAL 9006	350120000A56210
GS B-FKL W	White	RAL 9016	350120000E56210
GS B-FKL Br	Brown	RAL 8014	350120000D56210
GS B-FKL S	Black	RAL 9005	350120000G56210

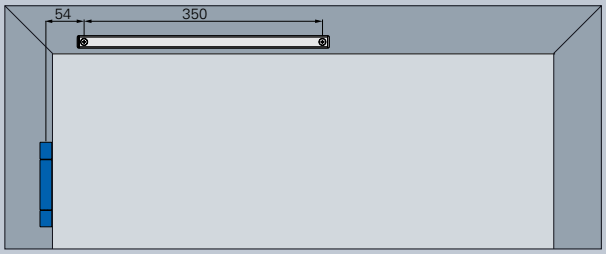

Mounting slide rail K

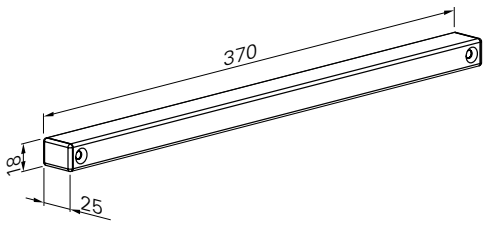

Slide rail K

For door closer ECO **Newton TS-41, TS-31** and **TS-15**

For surface fixed

Use in fire-protection only with ECO Newton TS-41 and TS-31. Slide rail is tested acc. to **EN 1154 A.**

Delivery includes lever arm K

Slide rail	Colour		Article number
GS K Si	Silver	RAL 9006	350150000A0000
GS K W	White	RAL 9016	350150000E0000
GS K Br	Brown	RAL 8014	350150000D0000
GS K S	Black	RAL 9005	350150000G0000

*When using with the door closer TS-41 and TS-31, the correct arm for slide rail B has to be ordered. Suitable arms on page 163.

Slide rails for single-leaf doors (surface mounted)

EN 1155 F CE

Mounting slide rail EF

EF

Slide rail with electromagnetic hold-open
for ECO **Newton TS-61, TS-51, TS-41*, TS-31*** and **Multi-Genius** (surface mounted)

Controlled by external fire alarm system. Hold-open angle adjustable from approx. 70° to 130°.
Input power 24 V DC, maximum 1 W. Power requirement only when door leaf in hold-open position.

Delivery includes lever arm B for TS-61 / 51.
Mounting only on pull side possible. Slide rail is tested acc. to **EN 1155** and approved by DIBt.

Slide rail EF **DIN left**	Colour	Article number	Slide rail EF **DIN right**	Colour	Article number
GS-EF Si	Silver RAL 9006	350100000A03501	**GS-EF Si**	Silver RAL 9006	350100000A03502
GS-EF W	White RAL 9016	350100000E03501	**GS-EF W**	White RAL 9016	350100000E03502
GS-EF Br	Brown RAL 8014	350100000D03501	**GS-EF Br**	Brown RAL 8014	350100000D03502
GS-EF S	Black RAL 9005	350100000G03501	**GS-EF S**	Black RAL 9005	350100000G03502
GS-EF ER	Stainless steel satin	350100000Q03511	**GS-EF ER**	Stainless steel satin	350100000Q03512

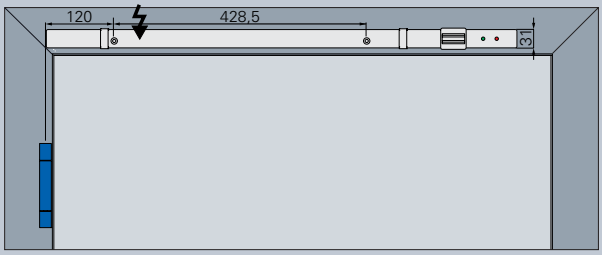

Mounting slide rail EFR

EFR

Slide rail with electromagnetic hold-open and integrated smoke detector
for ECO **Newton TS-61, TS-51, TS-41*, TS-31*** and **Multi-Genius** (surface mounted)

Controlled by integrated smoke detector with power supply. Power supply 220 V AC. Maximum 2 W power requirement when door leaf in hold-open position. When door is closed, maximum power requirement 1 W.

Delivery includes lever arm B for TS-61 / 51.
Mounting only on pull side possible. Slide rail is tested acc. to **EN 1155** and approved by DIBt.

Slide rail EFR **DIN left**	Colour	Article number	Slide rail EFR **DIN right**	Colour	Article number
GS-EFR Si	Silver RAL 9006	350100000A05501	**GS-EFR Si**	Silver RAL 9006	350100000A05502
GS-EFR W	White RAL 9016	350100000E05501	**GS-EFR W**	White RAL 9016	350100000E05502
GS-EFR Br	Brown RAL 8014	350100000D05501	**GS-EFR Br**	Brown RAL 8014	350100000D05502
GS-EFR S	Black RAL 9005	350100000G05501	**GS-EFR S**	Black RAL 9005	350100000G05502
GS-EFR ER	Stainless steel satin	350100000Q05511	**GS-EFR ER**	Stainless steel satin	350100000Q05512

Note!:
The use of an interrupt button for releasing the hold-open device is recommended.
When using in schools, caserns and stadiums as well as in areas with a high potential of vandalism, we recommend the use of eletromagnetic door retainers

*When using with ECO Newton TS-41 and TS-31, the correct arm has to be ordered. Suitable arms on page 163.

Swissdoor ApS • Stenhuggervej 2 • 5471 Søndersø • Danmark Telefon +45 86 28 00 00 • mail@swissdoor.dk • www.swissdoor.dk

Slide rails closing sequence selector for double-leaf doors (surface mounted)

EN 1158 F CE

ECO

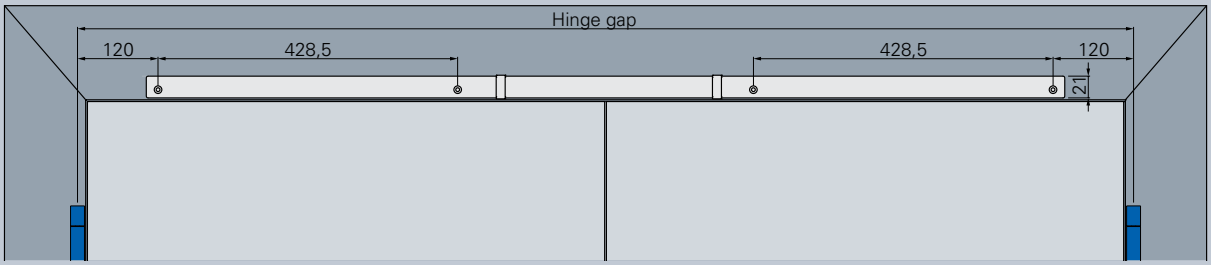

Mounting closing sequence selector SR

SR

Closing sequence selector on pull side
for ECO **Newton TS-61, TS-51, TS-41*, TS-31*** and **Multi-Genius** (surface mounted)

The closing sequence selector ensures that the door leafs are closing in the correct order. E.g.: the passive leaf first, active leaf last.

When opening the passive leaf, sliding shoes inside the active-leaf slide rail make sure that the active leaf stops as soon as the passive leaf opens. Mechanically independent from the hydraulic system of the door closer.

Delivery includes the respective cover profile and the lever arm B for TS-61 / 51.
Mounting only on pull side possible. The closing sequence selector is tested acc. to **EN 1158**.

Closing sequence selector on pull side
Hinge gap standard 1335 - 2500 mm

DIN left	Colour	Article number	DIN right	Colour	Article number
SR Si	Silver RAL 9006	350100000AK( )511	**SR Si**	Silver RAL 9006	350100000AK( )512
SR W	White RAL 9016	350100000EK( )511	**SR W**	White RAL 9016	350100000EK( )512
SR Br	Brown RAL 8014	350100000DK( )511	**SR Br**	Brown RAL 8014	350100000DK( )512
SR S	Black RAL 9005	350100000GK( )511	**SR S**	Black RAL 9005	350100000GK( )512
SR ER	Stainless steel satin	350100000QK( )511	**SR ER**	Stainless steel satin	350100000QK( )512

Closing sequence selector on pull side
Hinge gap special length 2500 - 2800 mm

DIN left	Colour	Article number	DIN right	Colour	Article number
SR Si	Silver RAL 9006	350100000AK( )521	**SR Si**	Silver RAL 9006	350100000AK( )522
SR W	White RAL 9016	350100000EK( )521	**SR W**	White RAL 9016	350100000EK( )522
SR Br	Brown RAL 8014	350100000DK( )521	**SR Br**	Brown RAL 8014	350100000DK( )522
SR S	Black RAL 9005	350100000GK( )521	**SR S**	Black RAL 9005	350100000GK( )522
SR ER	Stainless steel satin	350100000QK( )521	**SR ER**	Stainless steel satin	350100000QK( )522

*When using with ECO Newton TS-41 and TS-31, the correct arm has to be ordered. Suitable arms on page 163.

Slide rails closing sequence selector for double-leaf doors (surface mounted)

EN 1158 F CE

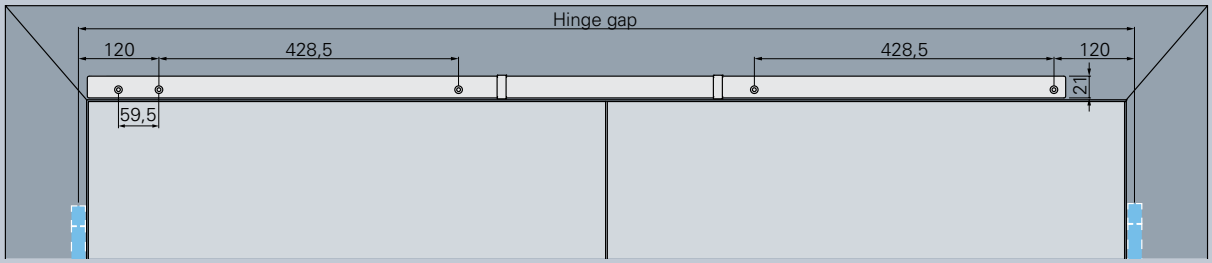

Mounting closing sequence selector SR-BG, illustration DIN left active leaf, DIN right laterally reversed.

SR-BG

Closing sequence selector push side
for ECO **Newton TS-61, TS-51** and **TS-41*** and **Multi-Genius** (surface mounted).

The closing sequence selector ensures that the door leafs are closing in the correct order. E.g.: the passive leaf first, active leaf last. When opening the passive leaf, sliding shoes inside the active-leaf slide rail make sure that the active leaf stops as soon as the passive leaf opens. Mechanically independent from the hydraulic system of the door closer.

When using the closing sequence selector SR-BG, please take into consideration the door width and the respective cover profile.
When ordering, please specify active leaf DIN left or DIN right. Delivery includes the lever arm B for TS-61 / 51.
Mounting only on push side possible. The closing sequence selector is tested acc. to **EN 1158**.

Closing sequence selector on push side
Hinge gap 1315 - 1817 mm / **Profile UA** 21 x 502 mm

DIN left	Colour	Article number	DIN right	Colour	Article number
SR-BG Si	Silver RAL 9006	350100000AK( )401	**SR-BG Si**	Silver RAL 9006	350100000AK( )402
SR-BG W	White RAL 9016	350100000EK( )401	**SR-BG W**	White RAL 9016	350100000EK( )402
SR-BG Br	Brown RAL 8014	350100000DK( )401	**SR-BG Br**	Brown RAL 8014	350100000DK( )402
SR-BG S	Black RAL 9005	350100000GK( )401	**SR-BG S**	Black RAL 9005	350100000GK( )402
SR-BG ER	Stainless steel satin	350100000QK( )401	**SR-BG ER**	Stainless steel satin	350100000QK9402

Closing sequence selector on push side
Hinge gap 1817 - 2821 mm / **Profile UA** 21 x 1506 mm

DIN left	Colour	Article number	DIN right	Colour	Article number
SR-BG Si	Silver RAL 9006	350100000AK( )411	**SR-BG Si**	Silver RAL 9006	350100000AK( )412
SR-BG W	White RAL 9016	350100000EK( )411	**SR-BG W**	White RAL 9016	350100000EK( )412
SR-BG Br	Brown RAL 8014	350100000DK( )411	**SR-BG Br**	Brown RAL 8014	350100000DK( )412
SR-BG S	Black RAL 9005	350100000GK( )411	**SR-BG S**	Black RAL 9005	350100000GK( )412
SR-BG ER	Stainless steel satin	350100000QK( )411	**SR-BG ER**	Stainless steel satin	350100000QK9412

The maximum opening angle of the **passive leaf** is 105° with a door width of x = 92 mm and a maximum of 115° with a door width of x = 55 mm.

The opening angle of the **active leaf** is 120° depending on the construction of the door and the hinge.

TS-61/51: x = 55 – 92 mm
TS-41: x = 60 – 92 mm

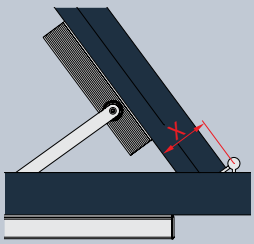

Note!:

For special dimensions (door leaf thickness, notches) please contact our technical support.

*When using the door closer TS-41, the correct arm has to be ordered. Suitable arms on page 163.

Swissdoor ApS • Stenhuggervej 2 • 5471 Søndersø • Danmark Telefon +45 86 28 00 00 • mail@swissdoor.dk • www.swissdoor.dk

Slide rails closing sequence selector for double-leaf doors (surface mounted)

EN 1155 EN 1158 F CE

ECO

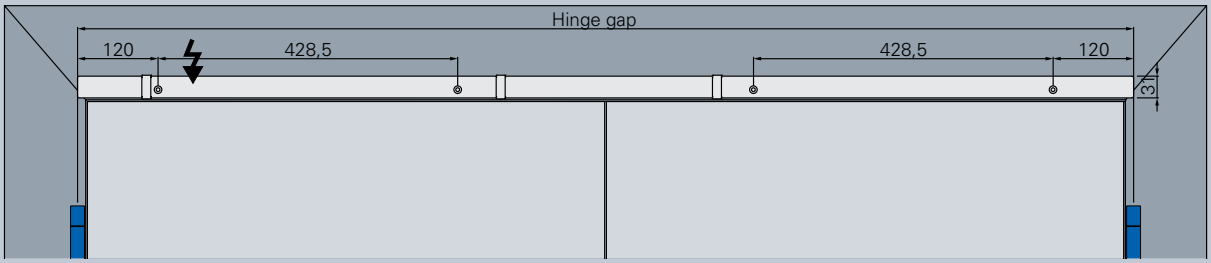

Mounting closing sequence selector SR-EF-1G

SR-EF-1G

Closing sequence selector with one electromagnetic hold-open in the active leaf
for ECO **Newton TS-61, TS-51, TS-41*, TS-31*** and **Multi-Genius** (surface mounted).

Hold-open angle adjustable from approx. 70° to 130°. No hold-open function in the passive leaf. Input power 24 V DC, maximum 1 W power requirement. Power requirement only when door leafs are in hold-open position.

The closing sequence selector ensures, that the door leafs are closing in the correct order. E.g.: the passive leaf first, active leaf last.

Only the active leaf can be hold open electro-magnetically.

Delivery includes the respective cover profile and the lever arm B for TS-61 / 51.
Mounting only on pull side possible. The closing sequence selector is tested acc. to **EN 1155** and **EN 1158** and approved by DIBt.

Closing sequence selector-EF-1G
Hinge gap standard 1335 - 2500 mm

DIN left	Colour	Article number	DIN right	Colour	Article number
SR-EF-1G Si	Silver RAL 9006	350100000AK( )511	**SR-EF-1G Si**	Silver RAL 9006	350100000AK( )512
SR-EF-1G W	White RAL 9016	350100000EK( )511	**SR-EF-1G W**	White RAL 9016	350100000EK( )512
SR-EF-1G Br	Brown RAL 8014	350100000DK( )511	**SR-EF-1G Br**	Brown RAL 8014	350100000DK( )512
SR-EF-1G S	Black RAL 9005	350100000GK( )511	**SR-EF-1G S**	Black RAL 9005	350100000GK( )512
SR-EF-1G ER	Stainless steel satin	350100000QK( )511	**SR-EF-1G ER**	Stainless steel satin	350100000QK( )512

Closing sequence selector-EF-1G
Hinge gap special length 2500 - 2800 mm

DIN left	Colour	Article number	DIN right	Colour	Article number
SR-EF-1G Si	Silver RAL 9006	350100000AK( )521	**SR-EF-1G Si**	Silver RAL 9006	350100000AK( )522
SR-EF-1G W	White RAL 9016	350100000EK( )521	**SR-EF-1G W**	White RAL 9016	350100000EK( )522
SR-EF-1G Br	Brown RAL 8014	350100000DK( )521	**SR-EF-1G Br**	Brown RAL 8014	350100000DK( )522
SR-EF-1G S	Black RAL 9005	350100000GK( )521	**SR-EF-1G S**	Black RAL 9005	350100000GK( )522
SR-EF-1G ER	Stainless steel satin	350100000QK( )521	**SR-EF-1G ER**	Stainless steel satin	350100000QK( )522

Note!:
The use of an interrupt button for releasing the hold-open device is recommended.
When using in schools, caserns and stadiums as well as in areas with a high potential of vandalism,
we recommend the use of eletromagnetic door retainers

When using with ECO Newton TS-41 and TS-31, the correct arm has to be ordered. Suitable arms on page 163.

Slide rails closing sequence selector for double-leaf doors (surface mounted)

EN 1155 EN 1158 F CE

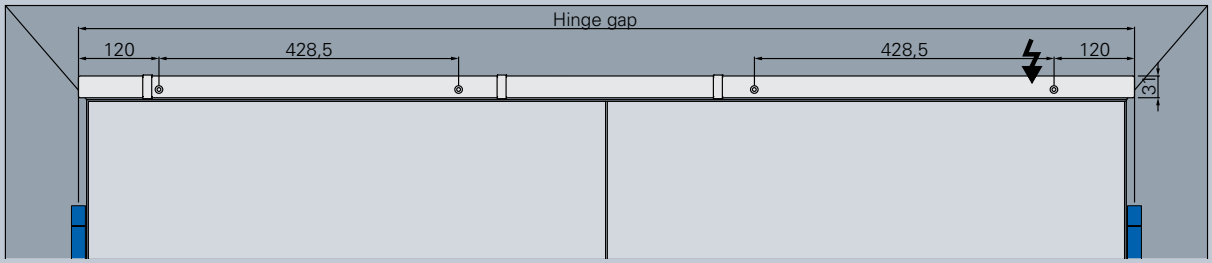

Mounting closing sequence selector SR-EF-1S

SR-EF-1S

Closing sequence selector with one electromagnetic hold-open in the passive leaf
for ECO **Newton TS-61, TS-51, TS-41*, TS-31*** and **Multi-Genius** (surface mounted).

Hold-open angle adjustable from approx. 70° to 130°. Input power 24 V DC, maximum 1W.
Power requirement only when door leafs are in hold-open position.

The closing sequence selector ensures, that the door leafs are closing in the correct order. E.g.: the passive leaf first, active leaf last.

When opening both door leafs, the passive leaf is hold open via a magnet. The active leaf also stays open since it is controlled by the closing sequence. An independent hold-open of the active leaf is not possible.

Delivery includes the respective cover profile and the lever arm B for TS-61 / 51.
Mounting only on pull side possible. The closing sequence selector is tested acc. to **EN 1155** and **EN 1158** and approved by DIBt.

Closing sequence selector-EF-1S
Hinge gap standard 1335 - 2500 mm

DIN left	Colour	Article number	DIN right	Colour	Article number
SR-EF-1S Si	Silver RAL 9006	350100000AK( )511	**SR-EF-1S Si**	Silver RAL 9006	350100000AK( )512
SR-EF-1S W	White RAL 9016	350100000EK( )511	**SR-EF-1S W**	White RAL 9016	350100000EK( )512
SR-EF-1S Br	Brown RAL 8014	350100000DK( )511	**SR-EF-1S Br**	Brown RAL 8014	350100000DK( )512
SR-EF-1S S	Black RAL 9005	350100000GK( )511	**SR-EF-1S S**	Black RAL 9005	350100000GK( )512
SR-EF-1S ER	Stainless steel satin	350100000QK( )511	**SR-EF-1S ER**	Stainless steel satin	350100000QK( )512

Closing sequence selector-EF-1S
Hinge gap special length 2500 - 2800 mm

DIN left	Colour	Article number	DIN right	Colour	Article number
SR-EF-1S Si	Silver RAL 9006	350100000AK( )521	**SR-EF-1S Si**	Silver RAL 9006	350100000AK( )522
SR-EF-1S W	White RAL 9016	350100000EK( )521	**SR-EF-1S W**	White RAL 9016	350100000EK( )522
SR-EF-1S Br	Brown RAL 8014	350100000DK( )521	**SR-EF-1S Br**	Brown RAL 8014	350100000DK( )522
SR-EF-1S S	Black RAL 9005	350100000GK( )521	**SR-EF-1S S**	Black RAL 9005	350100000GK( )522
SR-EF-1S ER	Stainless steel satin	350100000QK( )521	**SR-EF-1S ER**	Stainless steel satin	350100000QK( )522

Note!:
The use of an interrupt button for releasing the hold-open device is recommended.
When using in schools, caserns and stadiums as well as in areas with a high potential of vandalism,
we recommend the use of eletromagnetic door retainers

*When using the door closer TS-41, the correct arm has to be ordered. Suitable arms on page 163.

Swissdoor ApS • Stenhuggervej 2 • 5471 Søndersø • Danmark Telefon +45 86 28 00 00 • mail@swissdoor.dk • www.swissdoor.dk

Slide rails closing sequence selector for double-leaf doors (surface mounted)

EN 1155 EN 1158 F CE

ECO

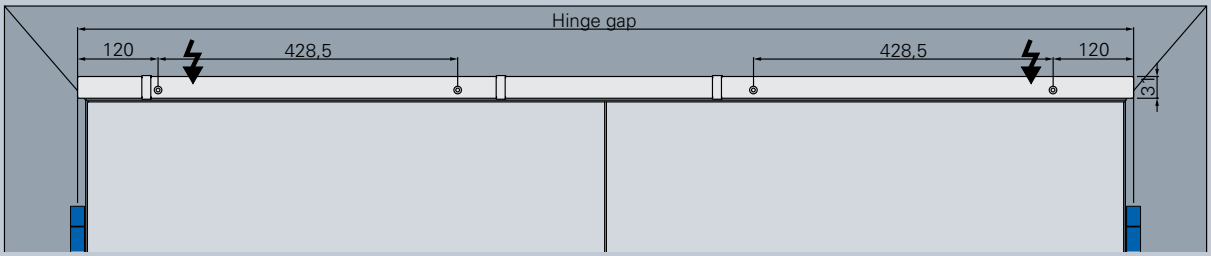

Mounting closing sequence selector SR-EF-2

SR-EF-2

Closing sequence selector with two electromagnetic hold-open in the active and passive leaf
for ECO **Newton TS-61, TS-51, TS-41*, TS-31*** and **Multi-Genius** (surface mounted).

Hold-open angle adjustable from approx. 70° to 130°. Input power 24 V DC, maximum 1W
Power requirement only when door leafs are in hold-open position.

The closing sequence selector ensures, that the door leafs are closing in the correct order. E.g.: the passive leaf first, active leaf last.

Electromagnetic hold-open in the active and passive leaf. When opening the active leaf, it is hold open electro-magnetically. In case the passive leaf is also opened, also this one is hold open electro-magnetically. At the same time, the closing sequence is activated and locks the active leaf. The magnet of the active leaf gets disconnected, both door leafs stay open.

Delivery includes the respective cover profile and the lever arm B for TS-61 / 51.
Mounting only on pull side possible. The closing sequence selector is tested acc. to **EN 1155** and **EN 1158** and approved by DIBt.

Closing sequence selector-EF-2
Hinge gap standard 1335 - 2500 mm

DIN left	Colour	Article number	DIN right	Colour	Article number
SR-EF-2 Si	Silver RAL 9006	350100000AK( )511	**SR-EF-2 Si**	Silver RAL 9006	350100000AK( )512
SR-EF-2 W	White RAL 9016	350100000EK( )511	**SR-EF-2 W**	White RAL 9016	350100000EK( )512
SR-EF-2 Br	Brown RAL 8014	350100000DK( )511	**SR-EF-2 Br**	Brown RAL 8014	350100000DK( )512
SR-EF-2 S	Black RAL 9005	350100000GK( )511	**SR-EF-2 S**	Black RAL 9005	350100000GK( )512
SR-EF-2 ER	Stainless steel satin	350100000QK( )511	**SR-EF-2 ER**	Stainless steel satin	350100000QK( )512

Closing sequence selector-EF-2
Hinge gap special length 2500 - 2800 mm

DIN left	Colour	Article number	DIN right	Colour	Article number
SR-EF-2 Si	Silver RAL 9006	350100000AK( )521	**SR-EF-2 Si**	Silver RAL 9006	350100000AK( )522
SR-EF-2 W	White RAL 9016	350100000EK( )521	**SR-EF-2 W**	White RAL 9016	350100000EK( )522
SR-EF-2 Br	Brown RAL 8014	350100000DK( )521	**SR-EF-2 Br**	Brown RAL 8014	350100000DK( )522
SR-EF-2 S	Black RAL 9005	350100000GK( )521	**SR-EF-2 S**	Black RAL 9005	350100000GK( )522
SR-EF-2 ER	Stainless steel satin	350100000QK( )521	**SR-EF-2 ER**	Stainless steel satin	350100000QK( )522

Note!:
The use of an interrupt button for releasing the hold-open device is recommended.
When using in schools, caserns and stadiums as well as in areas with a high potential of vandalism,
we recommend the use of eletromagnetic door retainers

*When using with ECO Newton TS-41 and TS-31, the correct arm has to be ordered. Suitable arms on page 163.

Slide rails closing sequence selector for double-leaf doors (surface mounted)

EN 1155 EN 1158 F CE

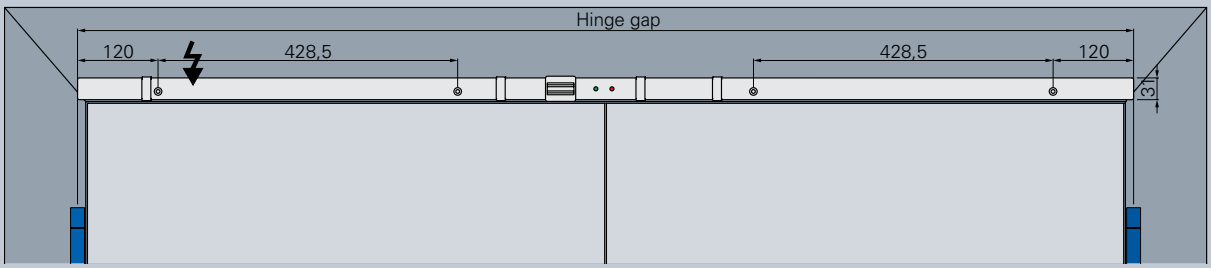

Mounting closing sequence selector SR-EFR-1G

SR-EFR-1G

Closing sequence selector with one electromagnetic hold-open in the active leaf as well as an integrated smoke detector for ECO **Newton TS-61, TS-51, TS-41*, TS-31*** and **Multi-Genius** (surface mounted).

Hold-open angle adjustable from approx. 70° to 130°. Input power 24 V DC, max. 2 W. Power requirement only when door leafs are in hold-open position. When door is closed, power requirement 1 W. Power supply 220 V AC.

The closing sequence selector ensures, that the door leafs are closing in the correct order. E.g.: the passive leaf first, active leaf last.

Only the active leaf can be hold open electro-magnetically.

Delivery includes the respective cover profile and the lever arm B for TS-61 / 51.
Mounting only on pull side possible. The closing sequence selector is tested acc. to **EN 1155** and **EN 1158** and approved by DIBt.

Closing sequence selector-EFR-1G
Hinge gap standard 1535 - 2500 mm

DIN left	Colour	Article number	DIN right	Colour	Article number
SR-EFR-1G Si	Silver RAL 9006	350100000AL( )511	**SR-EFR-1G Si**	Silver RAL 9006	350100000AL( )512
SR-EFR-1G W	White RAL 9016	350100000EL( )511	**SR-EFR-1G W**	White RAL 9016	350100000EL( )512
SR-EFR-1G Br	Brown RAL 8014	350100000DL( )511	**SR-EFR-1G Br**	Brown RAL 8014	350100000DL( )512
SR-EFR-1G S	Black RAL 9005	350100000GL( )511	**SR-EFR-1G S**	Black RAL 9005	350100000GL( )512
SR-EFR-1G ER	Stainless steel satin	350100001QL( )511	**SR-EFR-1G ER**	Stainless steel satin	350100001QL( )512

Closing sequence selector-EFR-1G
Hinge gap special length 2500 - 2800 mm

DIN left	Colour	Article number	DIN right	Colour	Article number
SR-EFR-1G Si	Silver RAL 9006	350100000AL( )521	**SR-EFR-1G Si**	Silver RAL 9006	350100000AL( )522
SR-EFR-1G W	White RAL 9016	350100000EL( )521	**SR-EFR-1G W**	White RAL 9016	350100000EL( )522
SR-EFR-1G Br	Brown RAL 8014	350100000DL( )521	**SR-EFR-1G Br**	Brown RAL 8014	350100000DL( )522
SR-EFR-1G S	Black RAL 9005	350100000GL( )521	**SR-EFR-1G S**	Black RAL 9005	350100000GL( )522
SR-EFR-1G ER	Stainless steel satin	350100001QL( )521	**SR-EFR-1G ER**	Stainless steel satin	350100001QL( )522

Note!:
The use of an interrupt button for releasing the hold-open device is recommended.
When using in schools, caserns and stadiums as well as in areas with a high potential of vandalism, we recommend the use of eletromagnetic door retainers

*When using the door closer TS-41, the correct arm has to be ordered. Suitable arms on page 163.

Swissdoor ApS • Stenhuggervej 2 • 5471 Søndersø • Danmark Telefon +45 86 28 00 00 • mail@swissdoor.dk • www.swissdoor.dk

Slide rails closing sequence selector for double-leaf doors (surface mounted)

EN 1155 EN 1158 F CE

ECO

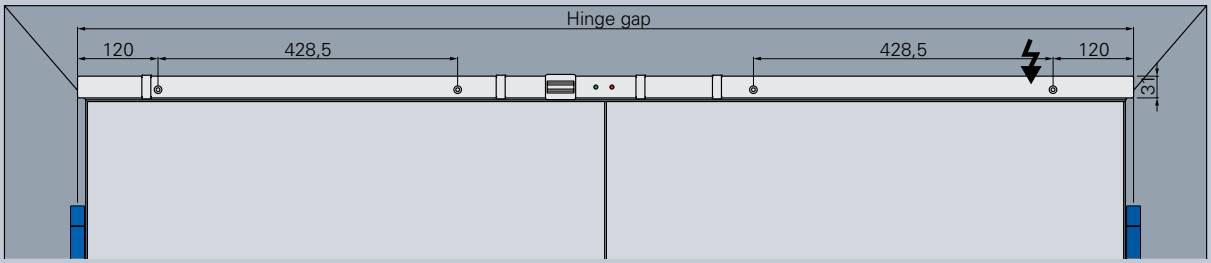

Mounting closing sequence selector SR-EFR-1S

SR-EFR-1S

Closing sequence selector with one electromagnetic hold-open in the passive leaf as well as an integrated smoke detector for ECO **Newton TS-61, TS-51, TS-41*, TS-31*** and **Multi-Genius** (surface mounted).

Hold-open angle adjustable from approx. 70° to 130°. Input power 24 V DC, max. 2 W. Power requirement only when door leafs are in hold-open position. When door is closed, power requirement 1 W. Power supply 220 V AC.

The closing sequence selector ensures, that the door leafs are closing in the correct order. E.g.: the passive leaf first, active leaf last.

When opening both door leafs, the passive leaf is hold open via a magnet. The active leaf also stays open since it is controlled by the closing sequence. An independent hold-open of the active leaf is not possible.

Delivery includes the respective cover profile and the lever arm B for TS-61 / 51.
Mounting only on pull side possible. The closing sequence selector is tested acc. to **EN 1155** and **EN 1158** and approved by DIBt.

Closing sequence selector-EFR-1S
Hinge gap standard 1535 - 2500 mm

DIN left	Colour	Article number	DIN right	Colour	Article number
SR-EFR-1S Si	Silver RAL 9006	350100000AL( )511	**SR-EFR-1S Si**	Silver RAL 9006	350100000AL( )512
SR-EFR-1S W	White RAL 9016	350100000EL( )511	**SR-EFR-1S W**	White RAL 9016	350100000EL( )512
SR-EFR-1S Br	Brown RAL 8014	350100000DL( )511	**SR-EFR-1S Br**	Brown RAL 8014	350100000DL( )512
SR-EFR-1S S	Black RAL 9005	350100000GL( )511	**SR-EFR-1S S**	Black RAL 9005	350100000GL( )512
SR-EFR-1S ER	Stainless steel satin	350100001QL( )511	**SR-EFR-1S ER**	Stainless steel satin	350100001QL( )512

Closing sequence selector-EFR-1S
Hinge gap special length 2500 - 2800 mm

DIN left	Colour	Article number	DIN right	Colour	Article number
SR-EFR-1S Si	Silver RAL 9006	350100000AL( )521	**SR-EFR-1S Si**	Silver RAL 9006	350100000AL( )522
SR-EFR-1S W	White RAL 9016	350100000EL( )521	**SR-EFR-1S W**	White RAL 9016	350100000EL( )522
SR-EFR-1S Br	Brown RAL 8014	350100000DL( )521	**SR-EFR-1S Br**	Brown RAL 8014	350100000DL( )522
SR-EFR-1S S	Black RAL 9005	350100000GL( )521	**SR-EFR-1S S**	Black RAL 9005	350100000GL( )522
SR-EFR-1S ER	Stainless steel satin	350100001QL( )521	**SR-EFR-1S ER**	Stainless steel satin	350100001QL( )522

Note!:
The use of an interrupt button for releasing the hold-open device is recommended.
When using in schools, caserns and stadiums as well as in areas with a high potential of vandalism,
we recommend the use of eletromagnetic door retainers

*When using with ECO Newton TS-41 and TS-31, the correct arm has to be ordered. Suitable arms on page 163.

Slide rails closing sequence selector for double-leaf doors (surface mounted)

EN 1155 EN 1158 F CE

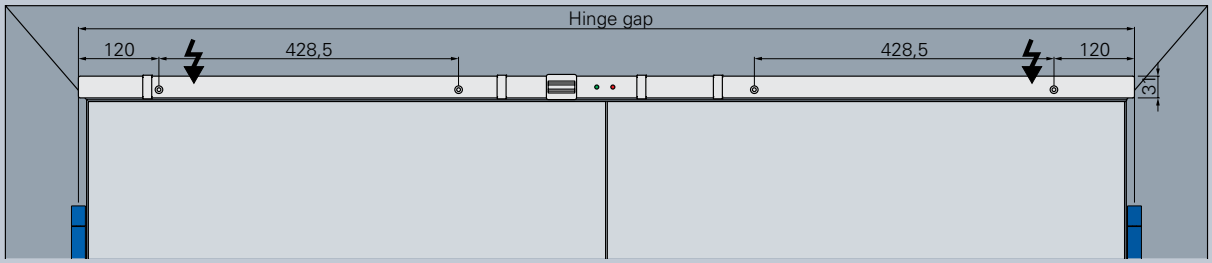

Mounting closing sequence selector SR-EFR-2

SR-EFR-2

Closing sequence selector with two electromagnetic hold-open in the active and passive leaf as well as an integrated smoke detector for ECO **Newton TS-61, TS-51, TS-41*, TS-31*** and **Multi-Genius** (surface mounted).

Hold-open angle adjustable from approx. 70° to 130°. Input power 24 V DC, max. 2 W. Power requirement only when door leafs are in hold-open position. When door is closed, power requirement 1 W. Power supply 220 V AC.

The closing sequence selector ensures that the door leafs are closing in the correct order. E.g.: the passive leaf first, active leaf last.

Electromagnetic hold-open in the active and passive leaf. When opening the active leaf, it is hold open electro-magnetically. In case the passive leaf is also opened, also this one is hold open electro-magnetically. At the same time, the closing sequence is activated and locks the active leaf. The magnet of the active leaf gets disconnected, both door leafs stay open.

Delivery includes the respective cover profile and the lever arm B for TS-61 / 51.
The closing sequence selector is tested acc. to **EN 1155** and **EN 1158** and approved by DIBt.

Closing sequence selector-EFR-2
Hinge gap standard 1535 - 2500 mm

DIN left	Colour	Article number	DIN right	Colour	Article number
SR-EFR-2 Si	Silver RAL 9006	351100000AL( )511	**SR-EFR-2 Si**	Silver RAL 9006	351100000AL( )512
SR-EFR-2 W	White RAL 9016	351100000EL( )511	**SR-EFR-2 W**	White RAL 9016	351100000EL( )512
SR-EFR-2 Br	Brown RAL 8014	351100000DL( )511	**SR-EFR-2 Br**	Brown RAL 8014	351100000DL( )512
SR-EFR-2 S	Black RAL 9005	351100000GL( )511	**SR-EFR-2 S**	Black RAL 9005	351100000GL( )512
SR-EFR-2 ER	Stainless steel satin	351100001QL( )511	**SR-EFR-2 ER**	Stainless steel satin	351100001QL( )512

Closing sequence selector-EFR-2
Hinge gap special length 2500 - 2800 mm

DIN left	Colour	Article number	DIN right	Colour	Article number
SR-EFR-2 Si	Silver RAL 9006	350100000AL( )521	**SR-EFR-2 Si**	Silver RAL 9006	350100000AL( )522
SR-EFR-2 W	White RAL 9016	350100000EL( )521	**SR-EFR-2 W**	White RAL 9016	350100000EL( )522
SR-EFR-2 Br	Brown RAL 8014	350100000DL( )521	**SR-EFR-2 Br**	Brown RAL 8014	350100000DL( )522
SR-EFR-2 S	Black RAL 9005	350100000GL( )521	**SR-EFR-2 S**	Black RAL 9005	350100000GL( )522
SR-EFR-2 ER	Stainless steel satin	350100001QL( )521	**SR-EFR-2 ER**	Stainless steel satin	350100001QL( )522

*When using the door closer TS-41, the correct arm has to be ordered. Suitable arms on page 163.

Swissdoor ApS • Stenhuggervej 2 • 5471 Søndersø • Danmark Telefon +45 86 28 00 00 • mail@swissdoor.dk • www.swissdoor.dk

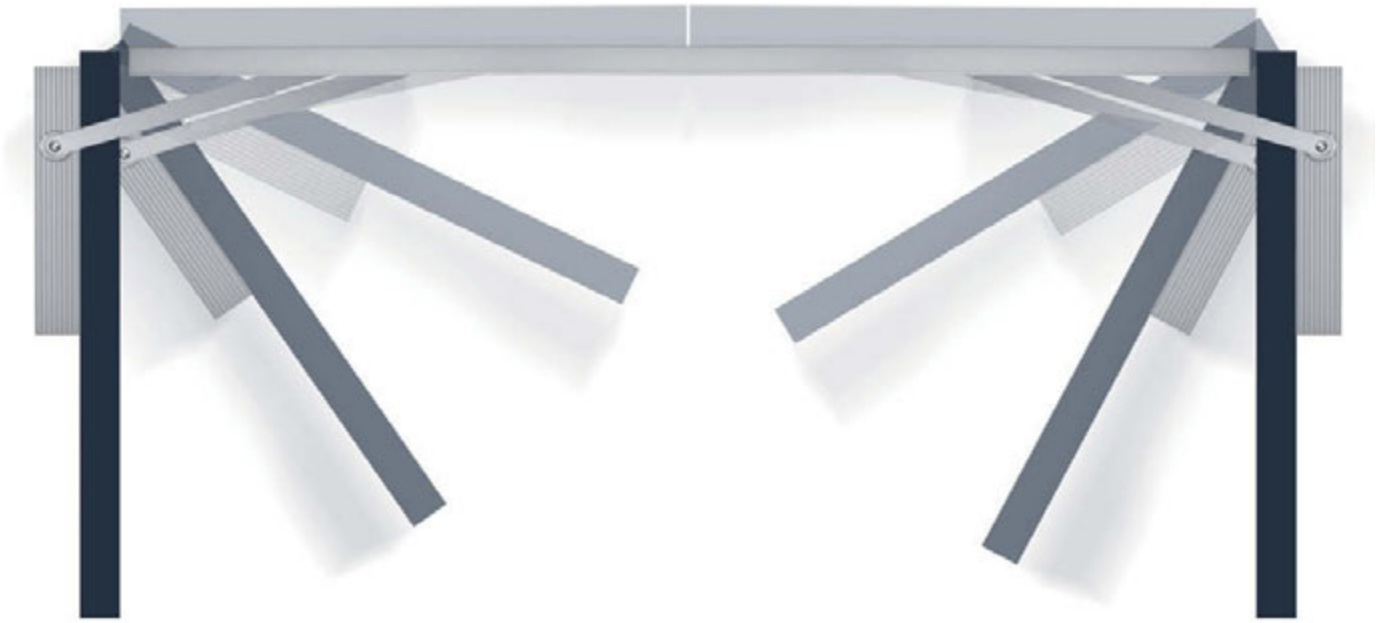

ECO Newton
Highlights in detail.

Combination talent:

The ECO Newton Vario concept permits the use of all slide rail door closers and can even be combined with different door leaf widths. In this way, optimum value for money can be achieved for each individual door situation.

ECO Newton TS-50

Swissdoor ApS • Stenhuggervej 2 • 5471 Søndersø • Danmark Telefon +45 86 28 00 00 • mail@swissdoor.dk • www.swissdoor.dk

ECO **Newton TS-50**

EN 1154 A F CE

ECO

Product characteristics

Closing force (continuously adjustable)	Size acc. to EN	1 - 5
Door width	acc. to EN ≤ 1.250 mm	■
Dimensions (incl. mounting plate)	Length in mm Depth in mm Height in mm	243 41 56
Mounting plate acc. to **EN 1154 A** (supplemetary sheet 1)		◘
Hinge-side and hinge-opposite side		■
DIN left / right		■
Latching speed (continuously adjustable)		■
Closing speed (continuously adjustable)		■
Back-check (constant)		■
Delayed action Not fire proved (continuously adjustable)		-
Tested acc. to EN		EN 1154 A
Suitable for fire- and smoke control doors		F
Certified according to EU-Directive		CE

■ Yes
- No
◘ Option

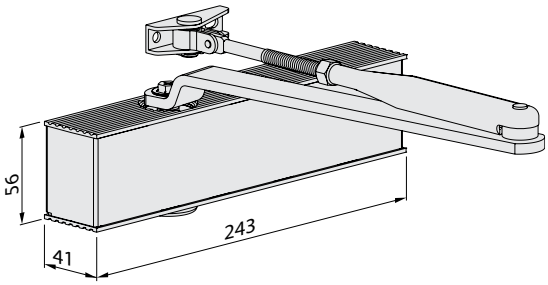

Dimensions: TS-50

2

ECO Newton TS-50 ▪ Highlights at a glance

*optional

Details regarding the ECO Newton Highlights can be found in the intro of this chapter.

Body: Silver RAL 9006
ECOclic: Stainless steel polished or satin

Body + ECOclic:
White RAL 9016

Body + ECOclic:
Black RAL 9005

Body + ECOclic:
Brown RAL 8014

Standard arm is always delivered in the same colour as the ordered door closer body.

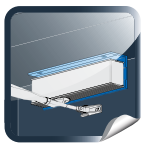

Under-lintel angle for door closer
Page 165

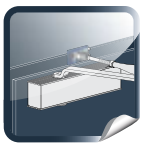

Adaptor profile
Page 167

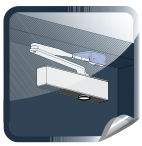

Angle bracket for parallel arm mounting Page 166

Order information

ECO Newton TS-50 ▪ Door closer with standard arm

Product information

Closing force 1- 5, tested acc. to **EN 1154 A** (for door widths up to 1.250 mm) continuously adjustable. Latching speed and closing speed continuously adjustable. Back-check constant. Same version DIN left and DIN right. Mounting height only 41 mm. Weight: 1.280g. Max. door opening angle: 180°

- ECOunity: Standard mounting on hinge side and head mounting on hinge-opposite side
- ECOphysis: Door closer and slide rail build a unit in aluminium and stainless steel
- ECOclic: The stainless steel cover encloses the aluminium body with the power of spring steel and conceals all of the adjusting elements, thus securing the closer against unauthorized access.
- ECOmount: Optional mounting plate according to **EN 1154**, supplementary sheet 1
- ECOvalve: Simple, high-precision and permanently secure adjustment of all parameters of the closing process with one conventional Allen key.
- ECOcover[2]: Optional stainless steel cover for the ECO Newton door closers
- ECOgreen: The intelligent construction and carefully planned use of materials help considerably to save resources

Pull side: standard mounting on door leaf. Push side: head mounting on door frame

Article numbers

Door closer with standard arm		Colour		Article number
TS-50	(1-5)	Silver	RAL 9006*	305052F11A00010
TS-50	(1-5)	White	RAL 9016	305052F11E00010
TS-50	(1-5)	Brown	RAL 8014	305052F11D00010
TS-50	(1-5)	Black	RAL 9005	305052F11G00010

Door closer without standard arm		Colour		Article number
TS-50	(1-5)	Silver	RAL 9006*	355052F11A00010
TS-50	(1-5)	White	RAL 9016	355052F11E00010
TS-50	(1-5)	Brown	RAL 8014	355052F11D00010
TS-50	(1-5)	Black	RAL 9005	355052F11G00010

*Door closer body in silver RAL 9006, ECOclic in stainless steel satin, optional polished

Swissdoor ApS • Stenhuggervej 2 • 5471 Søndersø • Danmark Telefon +45 86 28 00 00 • mail@swissdoor.dk • www.swissdoor.dk

SWISSDOOR
DØRTEKNIK FOR PROFESSIONELLE

ECO PHYSIS

ECO **Newton**
Highlights in detail.

Stainless steel and aluminium:

Elegant materials are standard with ECO Newton: the stainless steel cover and aluminium body unit of the new door closer generation are perfectly matched with one another – in an architecturally compatible form language.

Swissdoor ApS • Stenhuggervej 2 • 5471 Søndersø • Danmark Telefon +45 86 28 00 00 • mail@swissdoor.dk • www.swissdoor.dk

Hinge side

Illustration DIN left-door, DIN right laterally reversed

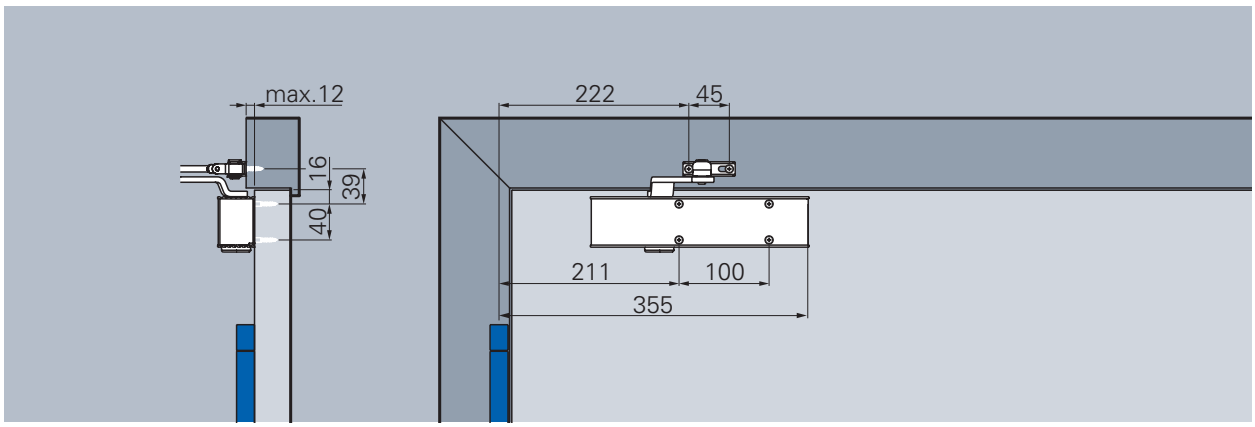

Standard mounting, hinge side (direct mounting, without mounting plate)

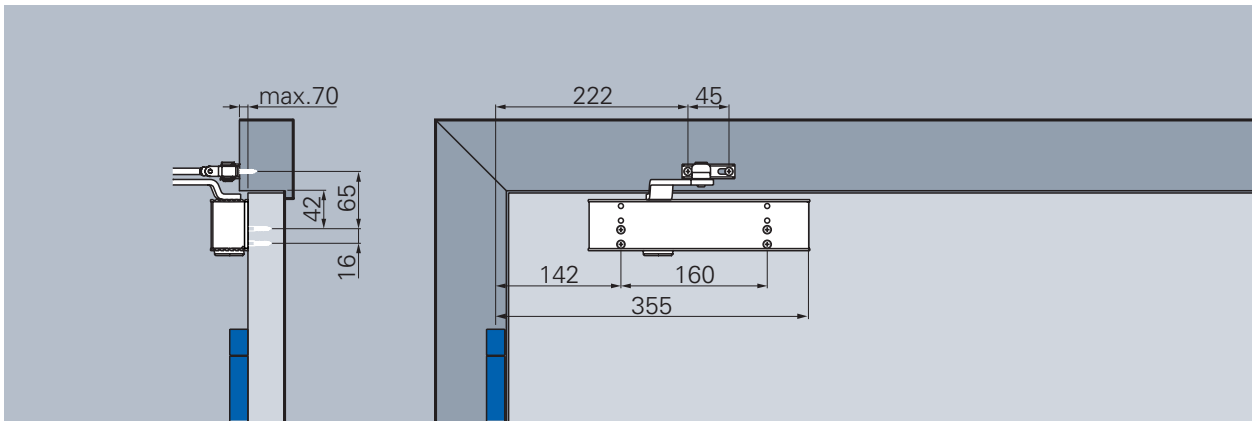

Standard mounting, hinge side (with optional mounting plate with DIN holes)

Closing speed
Continuously adjustable closing speed from approx. 180° to 0°.

Latching speed
Increases the closing speed and thus the safe closing of the door, for example to overcome door seals, door locks and high air pressure.
Continously adjustable, works between 10 to 0°

Back-check
Reduces the opening speed starting at 70° and avoids the slamming of the door.
Back-check fixed

Closing force diagram ECO Newton TS-50, hinge side

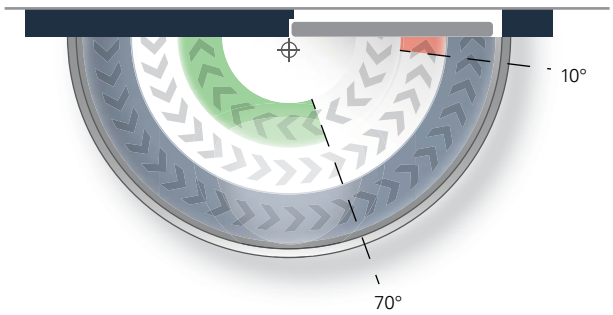

Closing force:	
Continuously adjustable	min. size 1 max. size 5
Default delivery condition:	size 3

Swissdoor ApS • Stenhuggervej 2 • 5471 Søndersø • Danmark Telefon +45 86 28 00 00 • mail@swissdoor.dk • www.swissdoor.dk

Hinge-opposite side

Illustration DIN right-door, DIN right laterally reversed

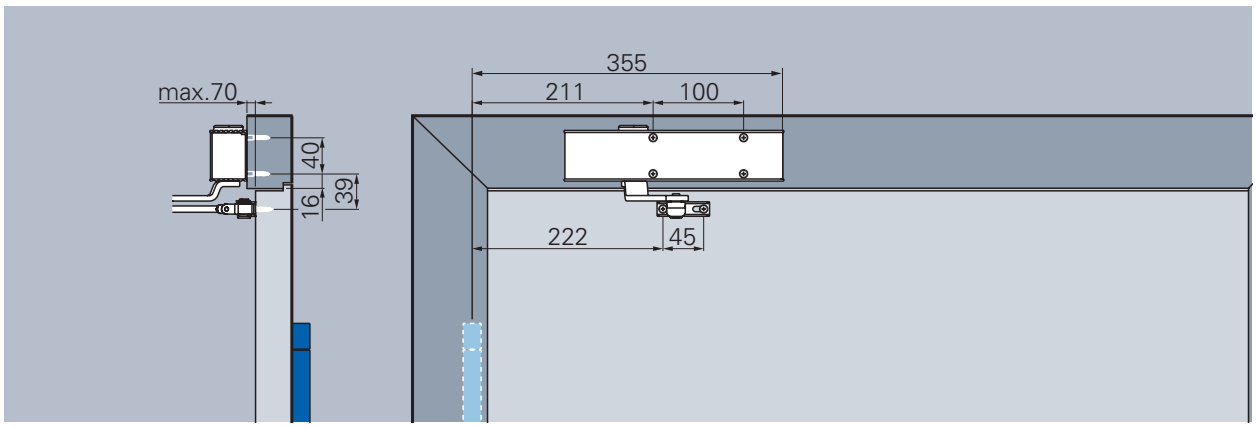

Head mounting, hinge-opposite side (direct mounting, without mounting plate)

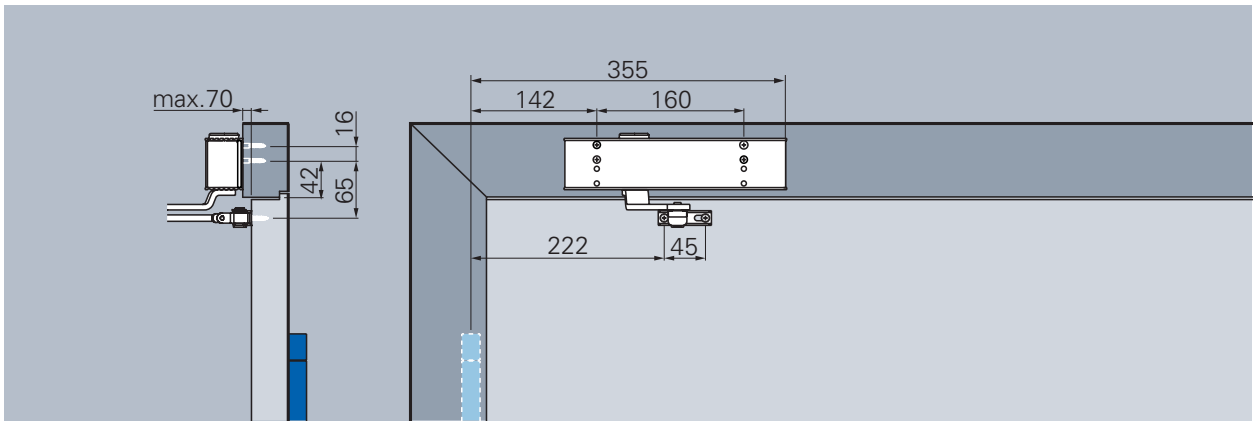

Head mounting, hinge-opposite side (with optional mounting plate with DIN holes)

Closing speed
Continuously adjustable closing speed from approx. 170° to 0°.

Latching speed
Increases the closing speed and thus the safe closing of the door, for example to overcome door seals, door locks and high air pressure.
Continously adjustable, works between 10 to 0°

Back-check
Reduces the opening speed starting at 70° and avoids the slamming of the door.
Back-check fixed

Note!:
Back-check out of order for head-mounting / mounting on hinge-opposite side

Closing force diagram ECO Newton TS-50, hinge-opposite side

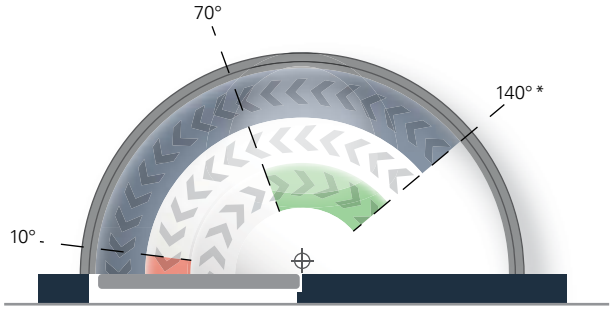

*Varies according to door thickness and type of hinge

A door stopper for opening limit is a must!

ECO Newton TS-20

Swissdoor ApS • Stenhuggervej 2 • 5471 Søndersø • Danmark Telefon +45 86 28 00 00 • mail@swissdoor.dk • www.swissdoor.dk

ECO **Newton TS-20**

EN 1154 A F CE

ECO

Product characteristics

Closing force (adjustable)	Size acc. to EN	2/3/5
Door width	acc. to EN ≤ 1.250 mm	■
Dimensions (incl. mounting plate)	Length in mm Depth in mm Height in mm	243 41 56
Mounting plate acc. to **EN 1154 A** (supplemetary sheet 1)		-
Hinge-side and hinge-opposite side		■
DIN left / right		■
Back-check (constant)		■
Latching speed (continuously adjustable)		■
Closing speed (continuously adjustable)		■
Delayed action (continuously adjustable)		-
Tested acc. to EN		EN 1154 A
Suitable for fire- and smoke control doors		F
Certified according to EU-Directive		CE

■ Yes
- No
◘ Option

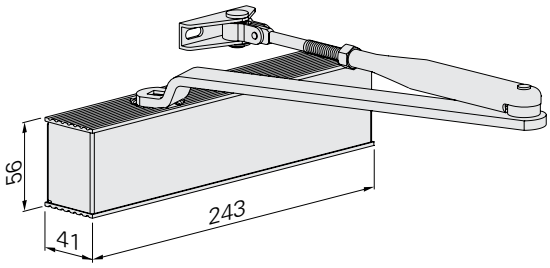

Dimensions: TS-20

2

ECO Newton TS-20 ▪ Highlights at a glance

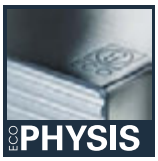

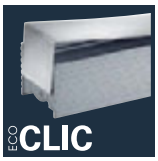

*optional

Details regarding the ECO **Newton Highlights can be found in the intro of this chapter.**

Body: Silver RAL 9006
ECOclic: Stainless steel polished or satin

Body + ECOclic:
White RAL 9016

Body + ECOclic:
Black RAL 9005

Body + ECOclic:
Brown RAL 8014

Standard arm is always delivered in the same colour as the ordered door closer body.

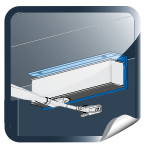

Under-lintel angle for door closer
Page 165

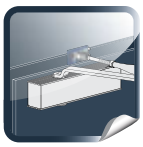

Adaptor profile
Page 167

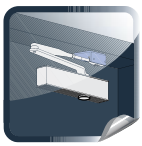

Angle bracket for parallel arm mounting
Page 166

Order information

ECO Newton TS-20 ▪ Door closer with standard arm

Product information

Closing force 2 / 3 / 5, tested acc. to **EN 1154 A** (for door widths up to 1.250 mm) adjustable by moving the door closer. Latching speed and closing speed continuously adjustable. Back-check constant. Same version DIN left and DIN right. Mounting height only 41 mm. Weight: 1.320g. Max. door opening angle: 180°

- ECOunity: Standard mounting on hinge side and head mounting on hinge-opposite side
- ECOphysis: Door closer and slide rail build a unit in aluminium and stainless steel
- ECOclic: The stainless steel cover encloses the aluminium body with the power of spring steel and conceals all of the adjusting elements, thus securing the closer against unauthorized access.
- ECOvalve: Simple, high-precision and permanently secure adjustment of all parameters of the closing process with one conventional Allen key.
- ECOcover[2]: Optional stainless steel cover for the ECO Newton door closer.
- ECOgreen: The intelligent construction and carefully planned use of materials help considerably to save re-sources.

Pull side: standard mounting on door leaf. Push side: head mounting on door frame.

The different sizes are reached by moving the door closer on the door leaf. Additional drilling only necessary for size EN 5.

Article numbers

Door closer with standard arm		Colour		Article number
TS-20	(1-5)	Silver	RAL 9006*	302052F11A71010
TS-20	(1-5)	White	RAL 9016	302052F11E71010
TS-20	(1-5)	Brown	RAL 8014	302052F11D71010
TS-20	(1-5)	Black	RAL 9005	302052F11G71010

Door closer with-out standard arm		Colour		Article number
TS-20	(1-5)	Silver	RAL 9006*	352052F11A00010
TS-20	(1-5)	White	RAL 9016	352052F11E00010
TS-20	(1-5)	Brown	RAL 8014	352052F11D00010
TS-20	(1-5)	Black	RAL 9005	352052F11G00010

*Door closer body in silver RAL 9006, ECOclic stainless steel satin, polished on request

Swissdoor ApS • Stenhuggervej 2 • 5471 Søndersø • Danmark Telefon +45 86 28 00 00 • mail@swissdoor.dk • www.swissdoor.dk

SWISSDOOR
DØRTEKNIK FOR PROFESSIONELLE

ECOCLIC

ECO Newton
Highlights in detail.

Intelligent stainless steel cover:

ECOclic envelops the aluminium body unit with the power of spring force. The cover conceals all of the adjusting elements and cannot be removed without tools, thus securing the closer against unauthorized access.

Swissdoor ApS • Stenhuggervej 2 • 5471 Søndersø • Danmark Telefon +45 86 28 00 00 • mail@swissdoor.dk • www.swissdoor.dk

Hinge side

Illustration DIN left-door, DIN right laterally reversed

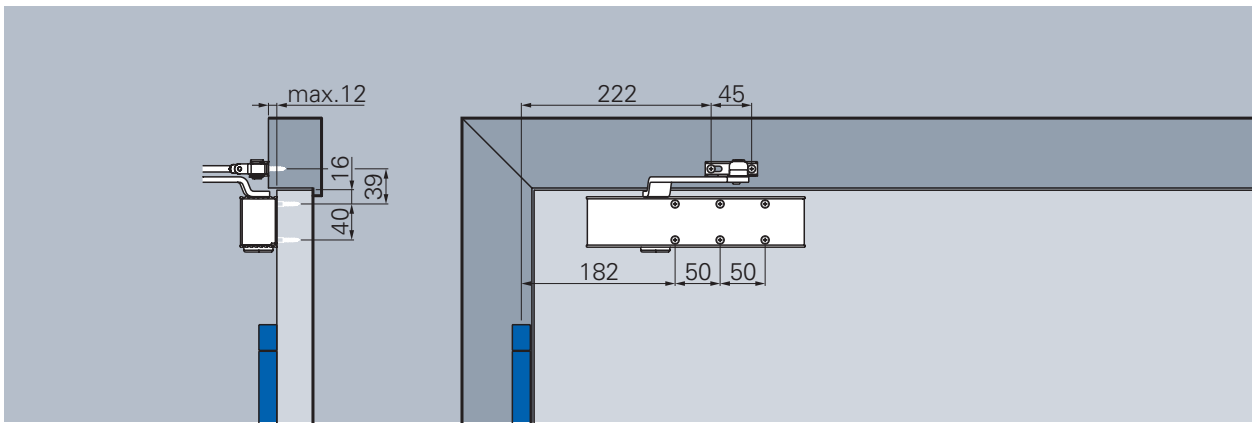

Standard mounting, hinge side (direct mounting, without mounting plate)

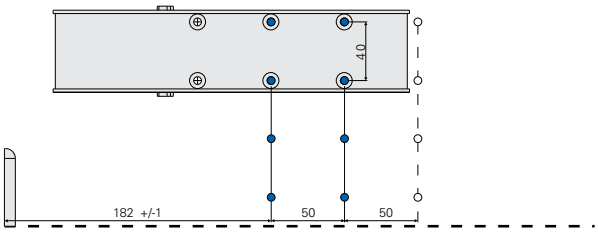

Closing force EN 2

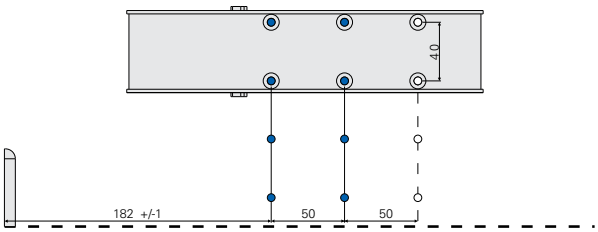

Closing force EN 3

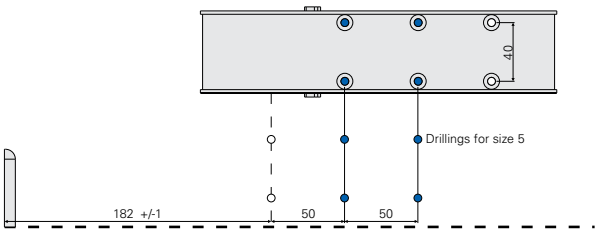

Closing force EN 5

Closing forces
The different sizes are reached by moving the door closer on the door leaf. Additional drilling only necessary for size EN 5.

Closing force diagram ECO Newton TS-20, hinge side

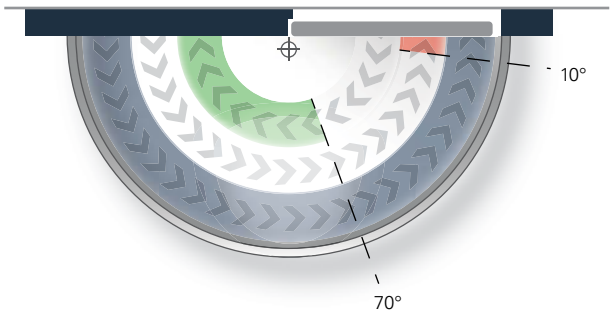

Closing speed
Continuously adjustable closing speed from approx. 180° to 0°.

Latching speed
Increases the closing speed and thus the safe closing of the door, for example to overcome door seals, door locks and high air pressure.
Continously adjustable, works between 10 to 0°

Back-check
Reduces the opening speed starting at 70° and avoids the slamming of the door.
Back-check fixed

Swissdoor ApS • Stenhuggervej 2 • 5471 Søndersø • Danmark Telefon +45 86 28 00 00 • mail@swissdoor.dk • www.swissdoor.dk

Hinge-opposite side

Illustration DIN right-door, DIN right laterally reversed

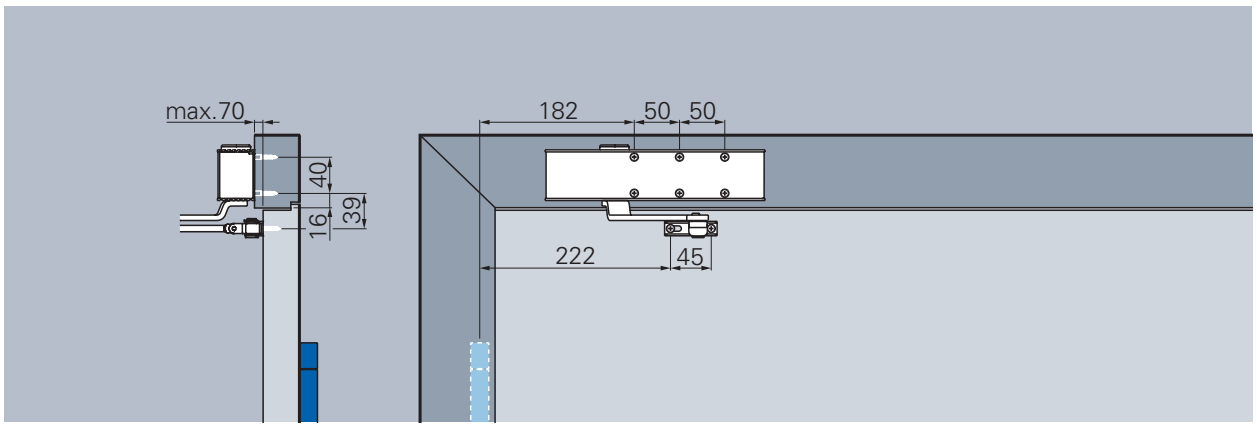

Head mounting, hinge-opposite side (direct mounting, without mounting plate)

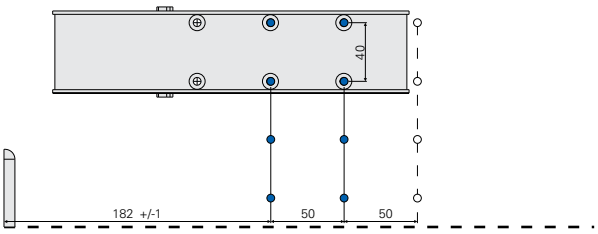

Closing force EN 2

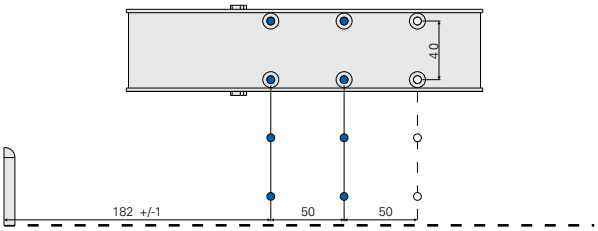

Closing force EN 3

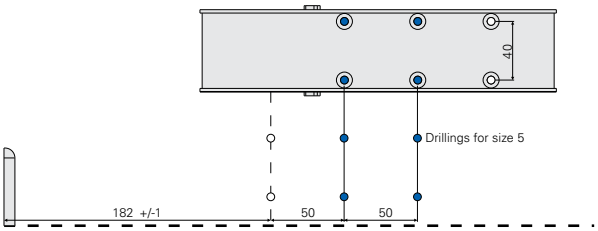

Closing force EN 5

Closing forces

The different sizes are reached by moving the door closer on the door leaf. Additional drilling only necessary for size EN 5.

Closing force diagram ECO Newton TS-20, hinge-opposite side

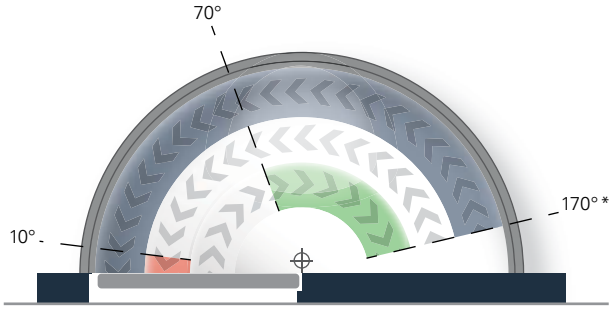

Closing speed
Continuously adjustable closing speed from approx. 170°* to 0°.

Latching speed
Increases the closing speed and thus the safe closing of the door, for example to overcome door seals, door locks and high air pressure.
Continously adjustable, works between 10 to 0°

Back-check
Reduces the opening speed starting at 70° and avoids the slamming of the door.
Back-check fixed

Note!:
Back-check out of order for head-mounting / mounting on hinge-opposite side

*Varies according to door thickness and type of hinge

A door stopper for opening limit is a must!

ECO Newton TS-16

Swissdoor ApS • Stenhuggervej 2 • 5471 Søndersø • Danmark Telefon +45 86 28 00 00 • mail@swissdoor.dk • www.swissdoor.dk

ECO **Newton TS-16**

Product characteristics

Closing force (continuously adjustable)	Size acc. to EN	1 – 3 4 – 6
Door width	≤ 1.250 mm	■
Dimensions	Length in mm Depth in mm Height in mm	209 38 56
Mounting plate		-
Hinge-side and hinge-opposite side		■
DIN left / right		■
Latching speed (adjustable from the side)		■
Closing speed (adjustable from the side)		■

■ Yes
- No
◘ Option

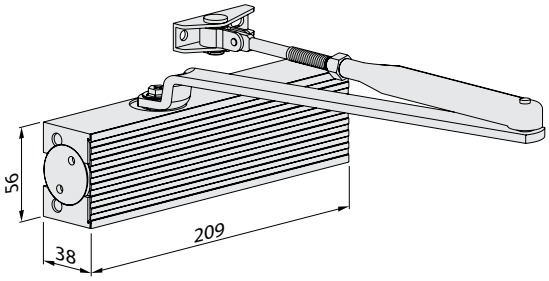

Dimensions: TS-16

Two different closing forces are reached by moving the door closer on the door frame. Both areas, size 1-3 or 4-6 are continously adjustable.

Body: Silver RAL 9006
ECOclic: Stainless steel polished or satin

Body + ECOclic:
White RAL 9016

Body + ECOclic:
Black RAL 9005

Body + ECOclic:
Brown RAL 8014

Standard arm is always delivered in the same colour as the ordered door closer body.

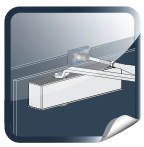

Adaptor profile
Page 167

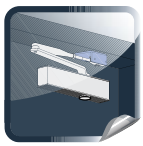

Angle bracket for parallel arm mounting Page 166

Order information

ECO Newton TS-16 ▪ Door closer with standard arm

Product information

- One door closer for two different closing forces: size 1 - 3 and size 4 - 6 acc. to **EN 1154** (for door widths up to 1.250 mm). Moving the door closer on the door leaf is adjusting the closing forces.
- Latching speed and closing speed continously adjustable from the side.
- Same version for DIN left / DIN right
- Height only 38 mm
- Max. door opening angle: 180°

Article numbers

Door closer with standard arm	Colour		Article number
TS-16 (1-3 or 4-6)	Silver	RAL 9006	301652E11A00010
TS-16 (1-3 or 4-6)	White	RAL 9016	301652E11E00010
TS-16 (1-3 or 4-6)	Brown	RAL 8014	301652E11D00010
TS-16 (1-3 or 4-6)	Black	RAL 9005	301652E11G00010

Door closer without standard arm	Colour		Article number
TS-16 (1-3 or 4-6)	Silver	RAL 9006	351652E11A00010
TS-16 (1-3 or 4-6)	White	RAL 9016	351652E11E00010
TS-16 (1-3 or 4-6)	Brown	RAL 8014	351652E11D00010
TS-16 (1-3 or 4-6)	Black	RAL 9005	351652E11G00010

Swissdoor ApS • Stenhuggervej 2 • 5471 Søndersø • Danmark Telefon +45 86 28 00 00 • mail@swissdoor.dk • www.swissdoor.dk

SWISSDOOR
DØRTEKNIK FOR PROFESSIONELLE

ECO GREEN

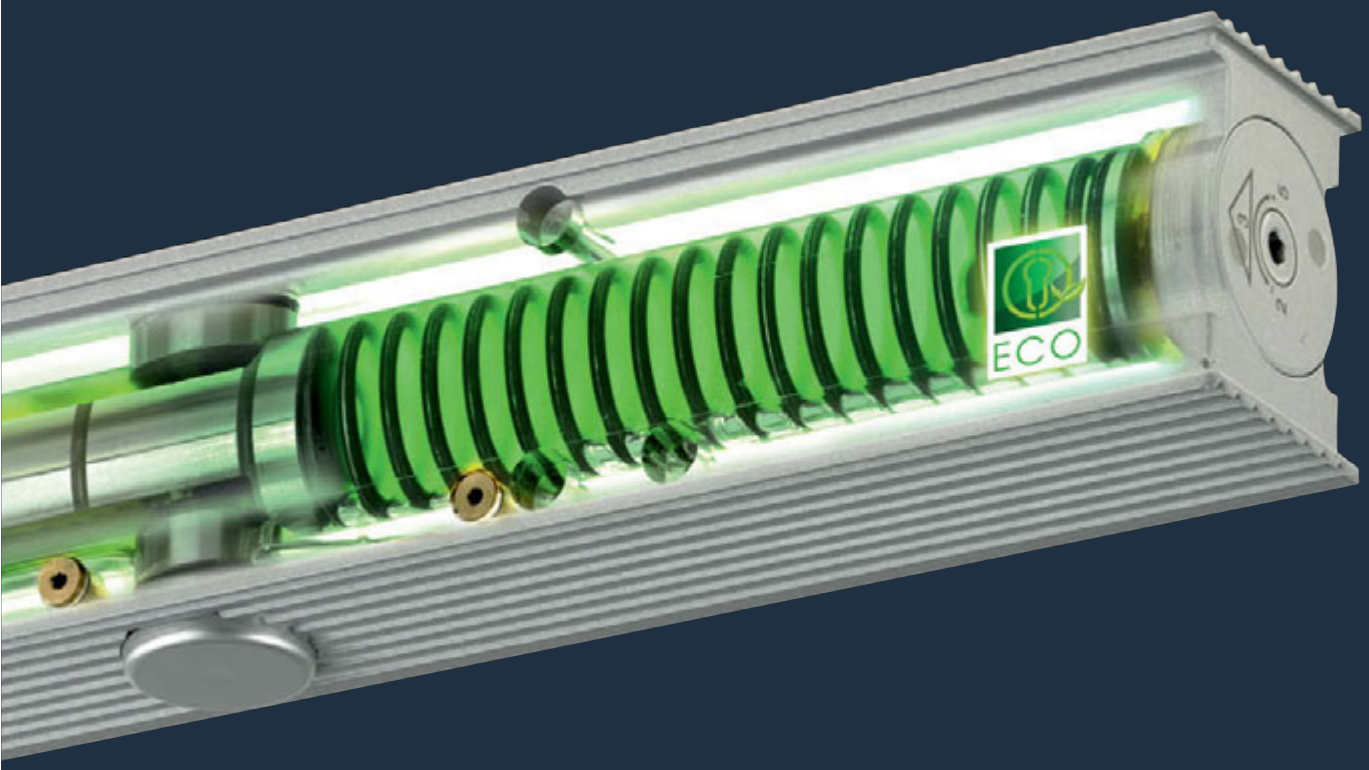

ECO Newton
Highlights in detail.

Saves resources:

ECO Newton door closers are up to 1,000 grammes lighter than comparable solutions. Their intelligent construction and carefully planned use of materials help considerably to save resources.

Swissdoor ApS • Stenhuggervej 2 • 5471 Søndersø • Danmark Telefon +45 86 28 00 00 • mail@swissdoor.dk • www.swissdoor.dk

Hinge side

Illustration DIN left-door, DIN right laterally reversed

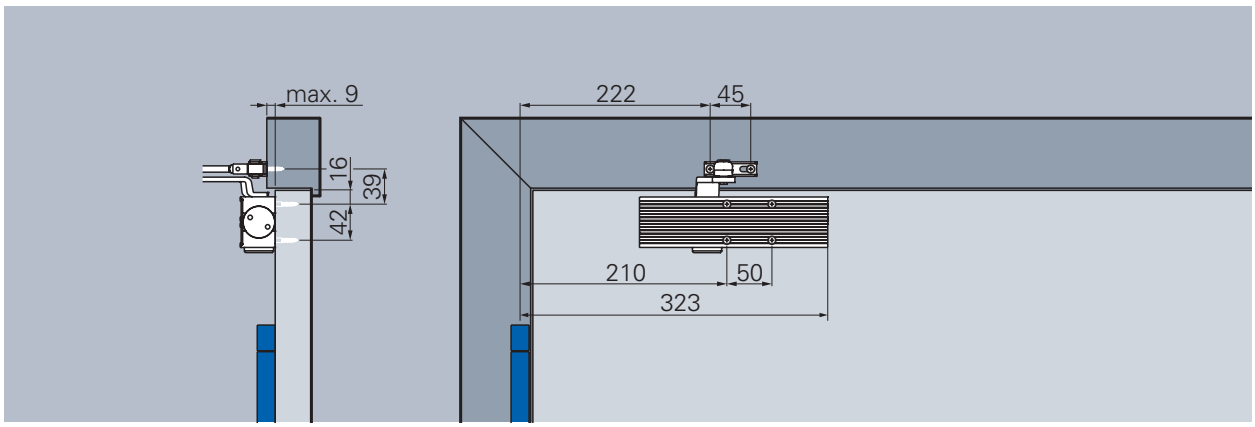

Standard mounting, hinge side (4 – 6)

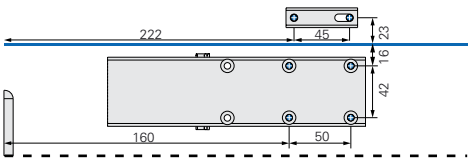

Closing force EN 1-3

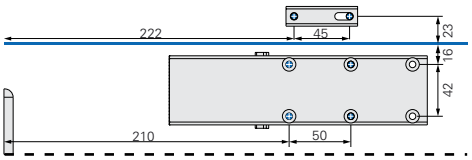

Closing force EN 4-6

Closing forces

The different sizes are reached by moving the door closer on the door leaf. Additional drilling only necessary for size EN 5.

Closing force diagram ECO Newton TS-16, hinge side

Closing speed
Continuously adjustable closing speed from approx. 180° to 0°.

Latching speed
Increases the closing speed and thus the safe closing of the door, for example to overcome door seals, door locks and high air pressure.
Continously adjustable, works between 10 to 0°

Note:
The use of a mounting plate is recommended for rebated doors.

Swissdoor ApS • Stenhuggervej 2 • 5471 Søndersø • Danmark Telefon +45 86 28 00 00 • mail@swissdoor.dk • www.swissdoor.dk

Hinge-opposite side

Illustration DIN right-door, DIN right laterally reversed

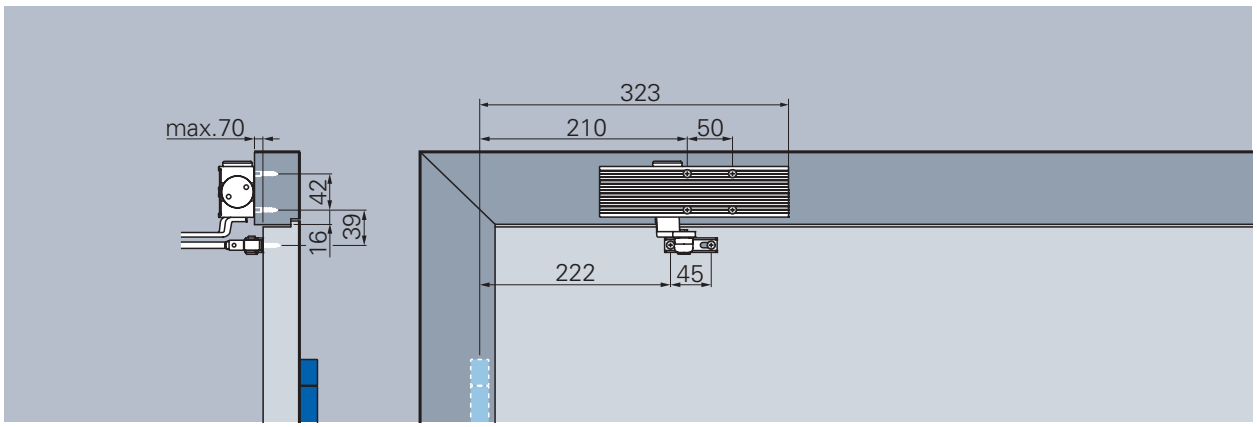

Head mounting, hinge-opposite side (4 – 6)

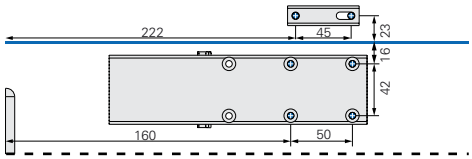

Closing force EN 1-3

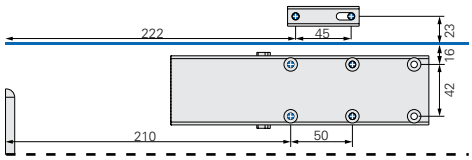

Closing force EN 4-6

Closing forces

The different sizes are reached by moving the door closer on the door leaf. Additional drilling only necessary for size EN 5.

Closing force diagram ECO Newton TS-16, hinge-opposite side

Closing speed
Continuously adjustable closing speed from approx. 170°* to 0°.

Latching speed
Increases the closing speed and thus the safe closing of the door, for example to overcome door seals, door locks and high air pressure.
Continously adjustable, works between 10 to 0°

*Varies according to door thickness and type of hinge

A door stopper for opening limit is a must!

ECO Newton TS-15 /-K

Swissdoor ApS • Stenhuggervej 2 • 5471 Søndersø • Danmark Telefon +45 86 28 00 00 • mail@swissdoor.dk • www.swissdoor.dk

ECO **Newton TS-15**

Product characteristics		TS-15	TS-15 K
Closing force (continuously adjustable)	Size acc. to EN	2/3/4/5	1 – 2
Door width	≤ 1.250 mm	■	■
Dimensions	Length in mm Depth in mm Height in mm	209 38 56	209 38 56
Mounting plate		-	-
Hinge-side and hinge-opposite side		■	■
DIN left / right		■	■
Latching speed (adjustable from the side)		■	■
Closing speed (adjustable from the side)		■	■

■ Yes
- No
◘ Option

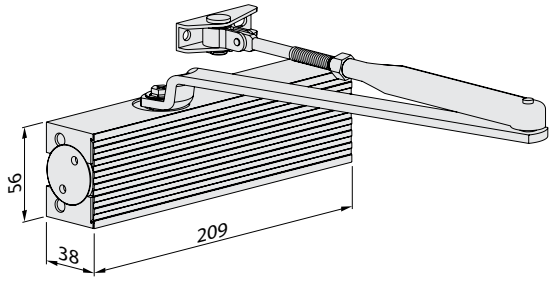

Dimensions: TS-15

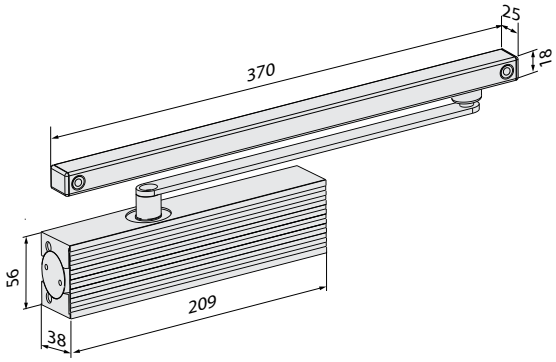

Dimensions: TS-15 K

The different door closer sizes for the type TS-15 are reached by moving the door closer on the door leaf.

Body: Silver RAL 9006
ECOclic: Stainless steel polished or satin

Body + ECOclic:
White RAL 9016

Body + ECOclic:
Black RAL 9005

Body + ECOclic:
Brown RAL 8014

Slide rail and standard arm are always delivered in the same colour as the ordered door closer body.

ECO **Newton TS-15** with standard arm:

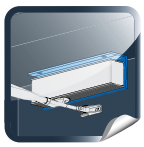

Under-lintel angle for door closer Page 165

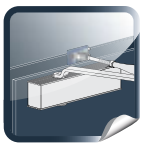

Adaptor profile Page 167

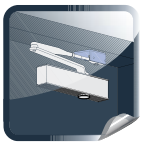

Angle bracket for parallel arm mounting Page 166

ECO **Newton TS-15** with slide rail K:

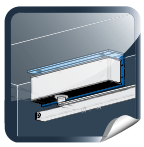

Under-lintel angle for door closer Page 165

Under-lintel angle for slide rail Page 165

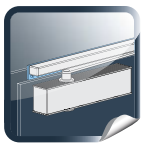

Adaptor profile Page 167

Order information

ECO Newton TS-15 ▪ Door closer with standard arm

Product information

- Closing force 2 / 3 / 4 / 5 acc. to EN (for door width up to 1.250 mm)
  Adjustable by moving the door closer on the door frame.
- Latching speed and closing speed continously adjustable from the side
- Same version DIN left and DIN right.
- Height only 38 mm
- Max. door opening angle: 180°

ECO Newton TS-15 K ▪ Door closer with slide rail

Product information

- Closing force 1 / 2 acc. to EN (for door width up to 850 mm)
- Latching speed and closing speed continously adjustable from the side
- Same version DIN left and DIN right.
- Height only 38 mm
- Max. door opening angle: 180°

Article numbers

Door closer with standard arm		Colour		Article number
TS-15	(2/3/4/5)	Silver	RAL 9006	301552E11A71010
TS-15	(2/3/4/5)	White	RAL 9016	301552E11E71010
TS-15	(2/3/4/5)	Brown	RAL 8014	301552E11D71010
TS-15	(2/3/4/5)	Black	RAL 9005	301552E11G71010

Door closer without standard arm		Colour		Article number
TS-15	(2/3/4/5)	Silver	RAL 9006	351552E11A00010
TS-15	(2/3/4/5)	White	RAL 9016	351552E11E00010
TS-15	(2/3/4/5)	Brown	RAL 8014	351552E11D00010
TS-15	(2/3/4/5)	Black	RAL 9005	351552E11G00010

Door closer with slide rail K		Colour		Article number
TS-15 K	(1/2)	Silver	RAL 9006	351552E11A00010 + 350150000A00000
TS-15 K	(1/2)	White	RAL 9016	351552E11E00010 + 350150000E00000
TS-15 K	(1/2)	Brown	RAL 8014	351552E11D00010 + 350150000D00000
TS-15 K	(1/2)	Black	RAL 9005	351552E11G00010 + 350150000G00000

Swissdoor ApS • Stenhuggervej 2 • 5471 Søndersø • Danmark Telefon +45 86 28 00 00 • mail@swissdoor.dk • www.swissdoor.dk

SWISSDOOR
DØRTEKNIK FOR PROFESSIONELLE

ECO VALVE

ECO **Newton**
Highlights in detail.

New ECO**valve technology:**

The new ECOvalve technology offers a wide and precisely adjustable setting range. This means the simple, high-precision and permanently secure adjustment of all parameters of the closing process with one conventional Allen key. As with all ECO Newton door closers, the closing speed and latching are regulated via the ECOvalve as a standard feature.

Hinge side

Illustration DIN left-door, DIN right laterally reversed

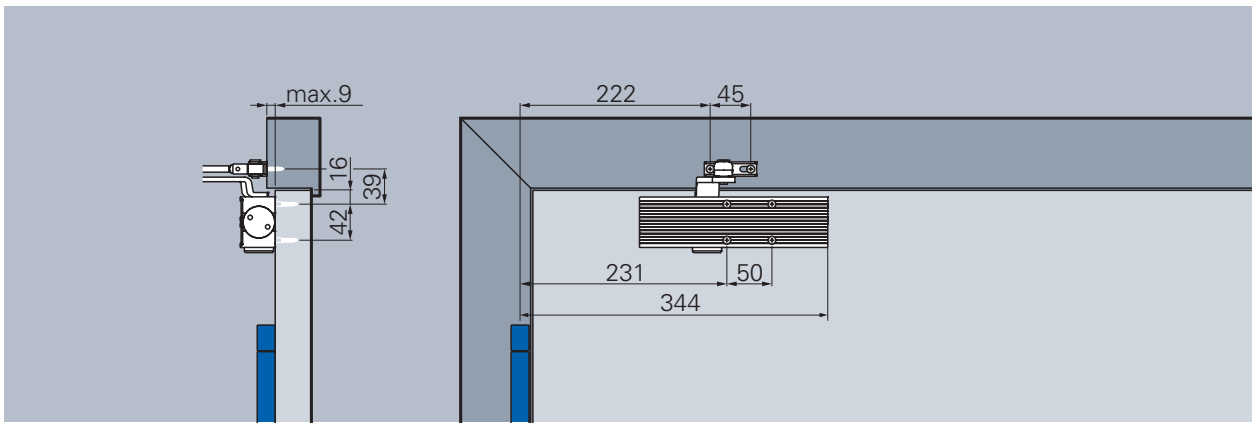

Standard mounting, hinge side (EN 4 / 5)

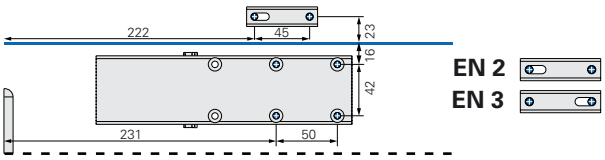

Closing force EN 2/3

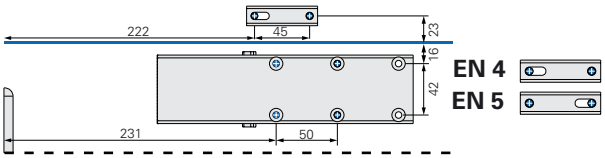

Closing force EN 4/5

Closing forces
The different sizes are reached by moving the door closer on the door leaf and by turning the standard arm reception by 180°

Closing force diagram ECO Newton TS-15, hinge side

Closing speed
Continuously adjustable closing speed from approx. 180° to 0°.

Latching speed
Increases the closing speed and thus the safe closing of the door, for example to overcome door seals, door locks and high air pressure.
Continously adjustable, works between 10 to 0°

Swissdoor ApS • Stenhuggervej 2 • 5471 Søndersø • Danmark Telefon +45 86 28 00 00 • mail@swissdoor.dk • www.swissdoor.dk

Hinge-opposite side

Illustration DIN right-door, DIN right laterally reversed

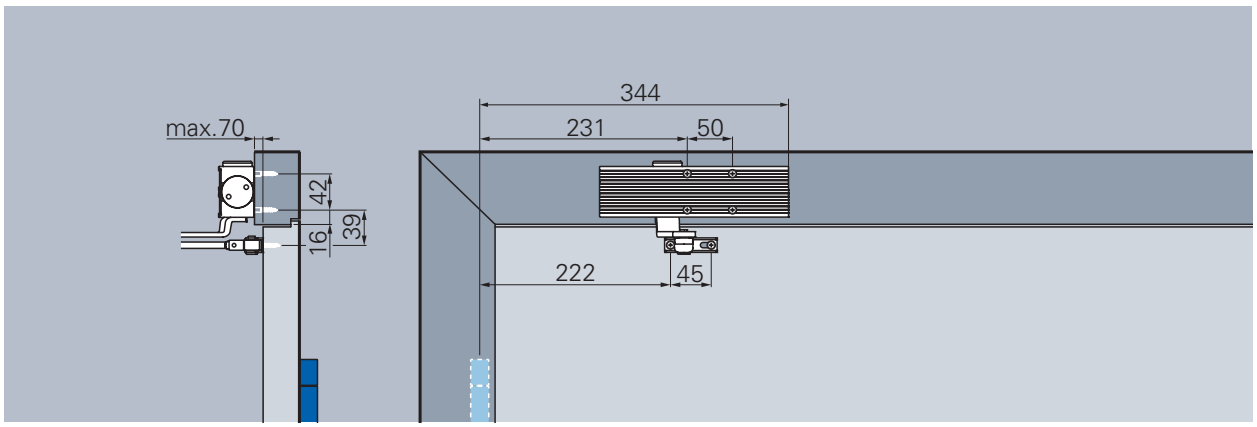

Head mounting, hinge-opposite side (EN 4 / 5)

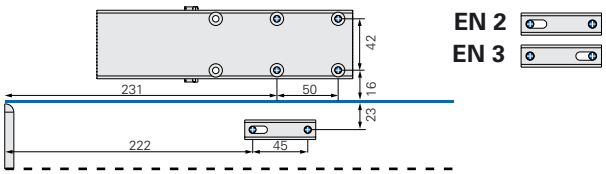

Closing force EN 2/3

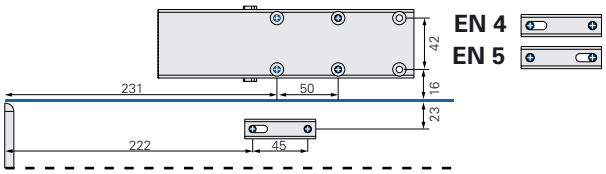

Closing force EN 4/5

Closing forces
The different sizes are reached by moving the door closer on the door leaf and by turning the standard arm reception by 180°

Closing force diagram ECO Newton TS-15, hinge-opposite side

Closing speed
Continuously adjustable closing speed from approx. 170°* to 0°.

Latching speed
Increases the closing speed and thus the safe closing of the door, for example to overcome door seals, door locks and high air pressure.
Continously adjustable, works between 10 to 0°

Note:
The use of a mounting plate is recommended for rebated doors.

*Varies according to door thickness and type of hinge

A door stopper for opening limit is a must!

Hinge side

Mounting with slide rail K, illustration DIN left-door, DIN right laterally reversed

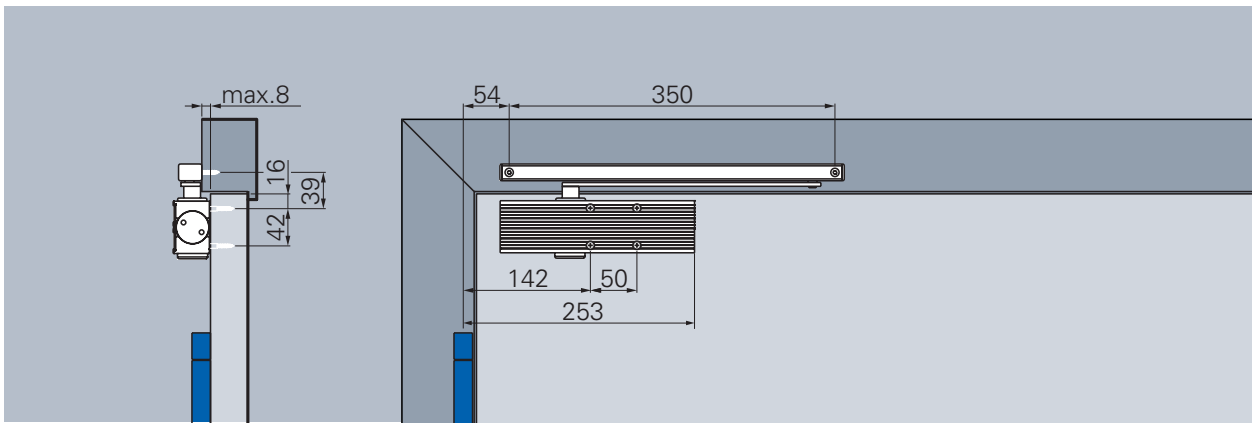

Standard mounting with slide rail K, hinge side

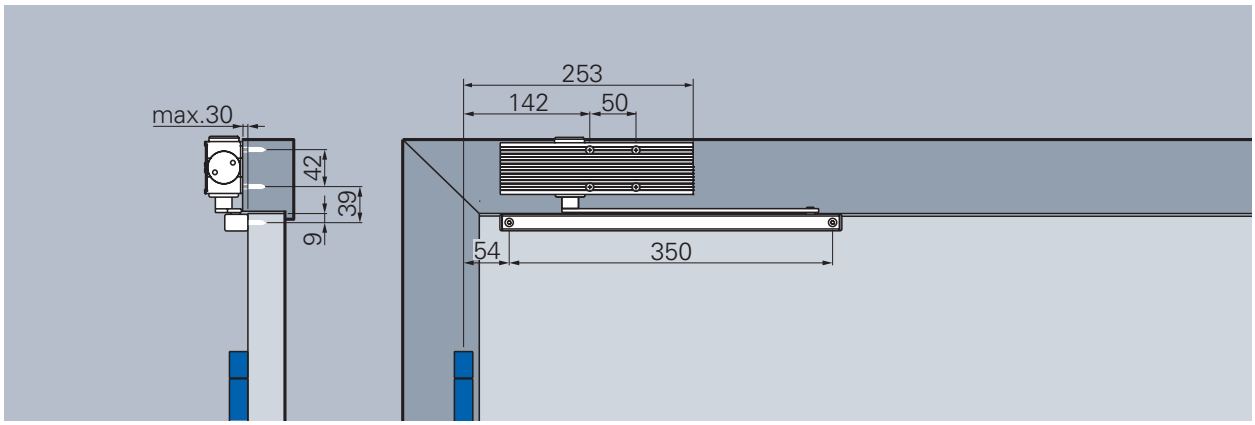

Head mounting with slide rail K, hinge side

Closing speed
Continuously adjustable closing speed from approx. 180° to 0°.

Latching speed
Increases the closing speed and thus the safe closing of the door, for example to overcome door seals, door locks and high air pressure.
Continously adjustable, works between 10 to 0°

Note:
The use of a mounting plate is recommended for rebated doors.

Closing force diagram ECO Newton TS-15 K, hinge side

Swissdoor ApS • Stenhuggervej 2 • 5471 Søndersø • Danmark Telefon +45 86 28 00 00 • mail@swissdoor.dk • www.swissdoor.dk

Hinge-opposite side

Mounting with slide rail K, illustration DIN right-door, DIN right laterally reversed

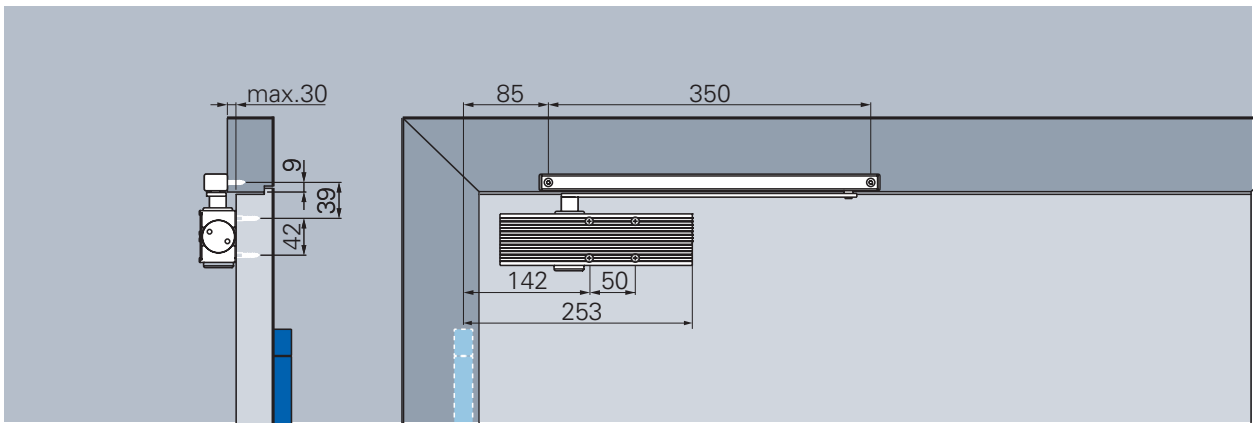

Standard mounting with slide rail K, hinge-opposite side

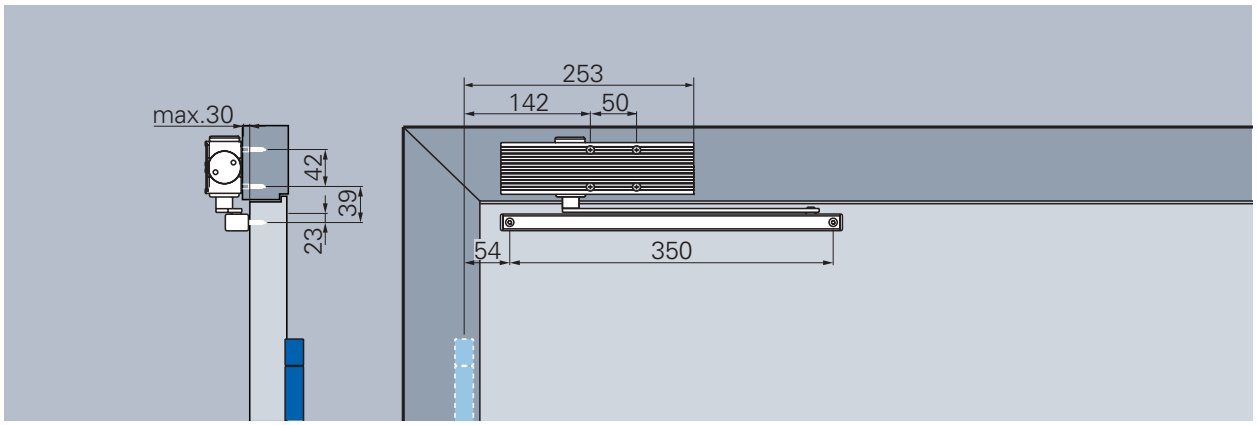

Head mounting with slide rail K, hinge-opposite side

Closing speed
Continuously adjustable closing speed from approx. 140° to 0°.

Latching speed
Increases the closing speed and thus the safe closing of the door, for example to overcome door seals, door locks and high air pressure.
Continously adjustable, works between 10 to 0°

Closing force diagram ECO Newton TS-15 K, hinge-opposite side

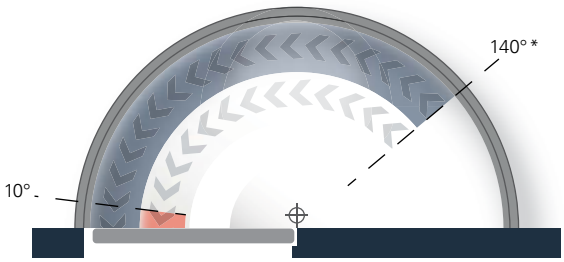

*Varies according to door thickness and type of hinge

A door stopper for opening limit is a must!

ECO Newton TS-14

Swissdoor ApS • Stenhuggervej 2 • 5471 Søndersø • Danmark Telefon +45 86 28 00 00 • mail@swissdoor.dk • www.swissdoor.dk

ECO **Newton TS-14**

Product characteristics

Closing force (continuously adjustable)	Size acc. to EN	1/2/3/4
Door width	≤ 1.100 mm	■
Dimensions	Length in mm Depth in mm Height in mm	209 38 56
Mounting plate		-
Hinge-side and hinge-opposite side		■
DIN left / right		■
Latching speed (adjustable from the side)		■
Closing speed (adjustable from the side)		■

■ Yes
- No
◘ Option

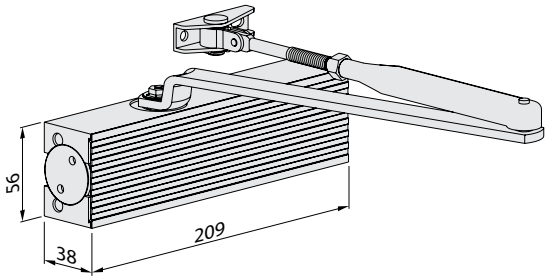

Dimensions: TS-14

The different sizes are reached by moving the door closer on the door leaf.

Body: Silver RAL 9006
ECOclic: Stainless steel polished or satin

Body + ECOclic:
White RAL 9016

Body + ECOclic:
Black RAL 9005

Body + ECOclic:
Brown RAL 8014

Standard arm is always delivered in the same colour as the ordered door closer body.

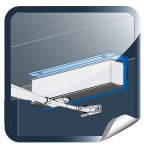

Under-lintel angle for door closer Page 165

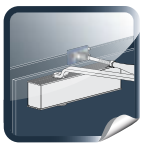

Adaptor profile Page 167

Angle bracket for parallel arm mounting Page 166

Order information

ECO Newton TS-14 ▪ Door closer with standard arm

Product information

- Closing force 1 / 2 / 3 / 4 nach EN (for door width up to 1.100 mm).
  Adjustable by moving the door closer.
- Latching speed and closing speed continously adjustable from the side
- Same version DIN left and DIN right.
- Height only 38 mm
- Max. door opening angle: 180°

Article numbers

Door closer with standard arm		Colour		Article number
TS-14	(1/2/3/4)	Silver	RAL 9006	301452E11A71010
TS-14	(1/2/3/4)	White	RAL 9016	301452E11E71010
TS-14	(1/2/3/4)	Brown	RAL 8014	301452E11D71010
TS-14	(1/2/3/4)	Black	RAL 9005	301452E11G71010

Door closer without standard arm		Colour		Article number
TS-14	(1/2/3/4)	Silver	RAL 9006	351452E11A00010
TS-14	(1/2/3/4)	White	RAL 9016	351452E11E00010
TS-14	(1/2/3/4)	Brown	RAL 8014	351452E11D00010
TS-14	(1/2/3/4)	Black	RAL 9005	351452E11G00010

Swissdoor ApS • Stenhuggervej 2 • 5471 Søndersø • Danmark Telefon +45 86 28 00 00 • mail@swissdoor.dk • www.swissdoor.dk

SWiSSDOOR
DØRTEKNIK FOR PROFESSIONELLE

Autostadt VW, Wolfsburg,
Germany

ECO **Newton**
All a question of the system.

The new ECO Newton door closers are a part of the comprehensive ECO Schulte door fittings system. ECO Schulte thinks in terms of complete solutions and is one of the very few system providers dealing in all aspects of the door. From hinges to handles and from locking technology to single and double-leaf door closing systems, the company provides all safety relevant components from a single source. A unique, logical overall concept in regard to technology, function, form and service, because safety is inseparable.

Swissdoor ApS • Stenhuggervej 2 • 5471 Søndersø • Danmark Telefon +45 86 28 00 00 • mail@swissdoor.dk • www.swissdoor.dk

Hinge side

Illustration DIN left-door, DIN right laterally reversed

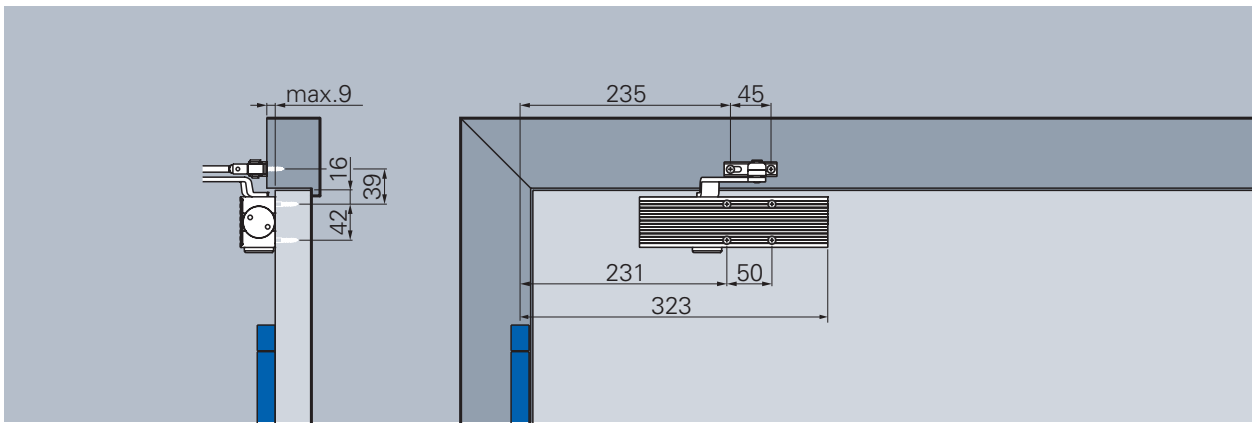

Standard mounting, hinge side

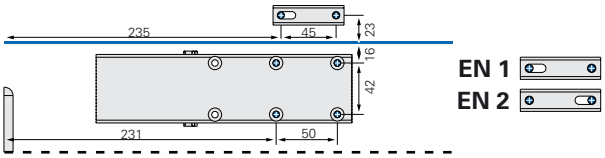

Closing force EN 1/2

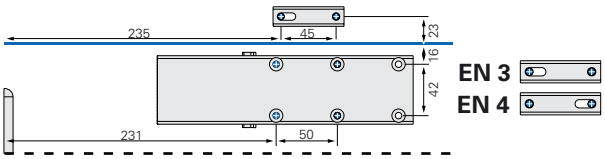

Closing force EN 3/4

Closing forces
The different sizes are reached by moving the door closer on the door leaf and by turning the standard arm reception by 180°.

Closing force diagram ECO Newton TS-14, hinge side

Closing speed
Continuously adjustable closing speed from approx. 180° to 0°.

Latching speed
Increases the closing speed and thus the safe closing of the door, for example to overcome door seals, door locks and high air pressure.
Continously adjustable, works between 10 to 0°

Note:
The use of a mounting plate is recommended for rebated doors.

Swissdoor ApS • Stenhuggervej 2 • 5471 Søndersø • Danmark Telefon +45 86 28 00 00 • mail@swissdoor.dk • www.swissdoor.dk

Hinge-opposite side

Illustration DIN right-door, DIN right laterally reversed

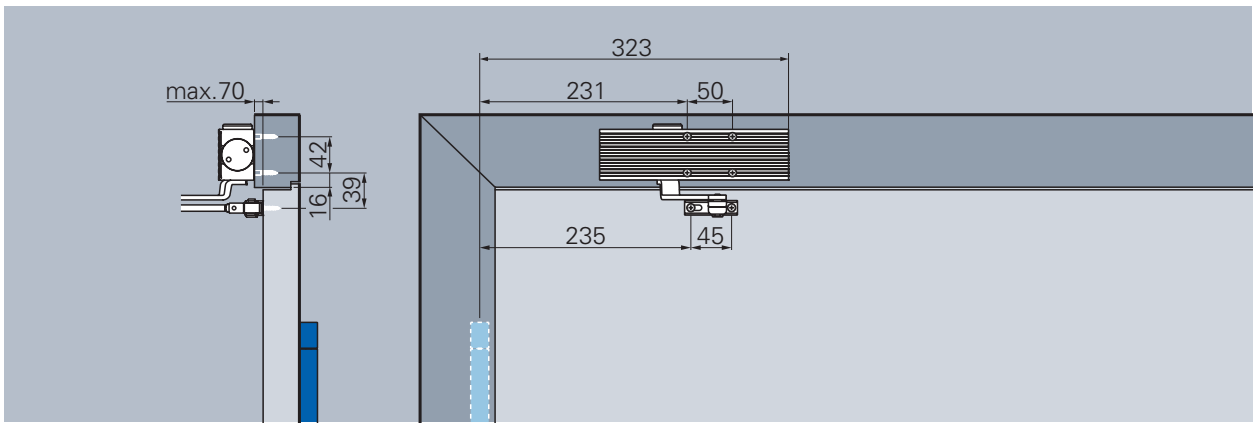

Head mounting, hinge-opposite side

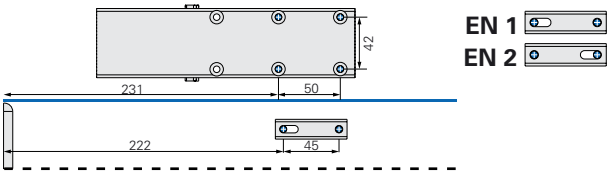

Closing force EN 1/2

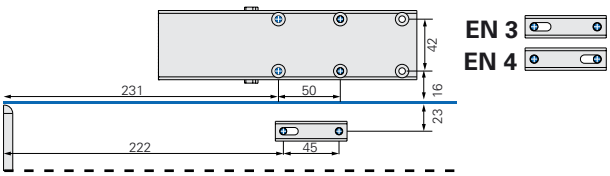

Closing force EN 3/4

Closing forces
The different sizes are reached by moving the door closer on the door leaf and by turning the standard arm reception by 180°.

Closing force diagram ECO Newton TS-14, hinge-opposite side

Closing speed
Continuously adjustable closing speed from approx. 170°* to 0°.

Latching speed
Increases the closing speed and thus the safe closing of the door, for example to overcome door seals, door locks and high air pressure.
Continously adjustable, works between 10 to 0°

*Varies according to door thickness and type of hinge

A door stopper for opening limit is a must!

ECO Multi-Genius

Swissdoor ApS • Stenhuggervej 2 • 5471 Søndersø • Danmark Telefon +45 86 28 00 00 • mail@swissdoor.dk • www.swissdoor.dk

Product characteristics		MG		ITS MG	
Closing force (with closing force display, continuously adjustable)	Size acc. to EN	1 – 4	2 – 5	1 – 4	2 – 5
Door width	≤ 1100 mm	■	■	■	■
acc. to EN	≤ 1250 mm	-	■	-	■
Dimensions (incl. mounting plate for Multi-Genius)	Length in mm Depth in mm Height in mm	333 40 67	333 40 67	328 30 56	328 30 56
Mounting plate acc. to **EN 1154 A** (supplemetary sheet 1)		■	■	-	-
Hinge-side and hinge-opposite side		■	■	■	■
DIN left / right		■	■	■	■
Latching speed (continuously adjustable)		■	■	■	■
Closing speed (continuously adjustable)		■	■	■	■
Door opening angle (depends on the notch of the door)		180°		140 – 165°*	
Tested acc. to EN		EN 1154 A			
Suitable for fire- and smoke control doors (no permission for head mounting on hinge-opposited sidet, concealed ITS)		F			
Certified according to EU-Directive		CE			

■ Yes
- No
◘ Option

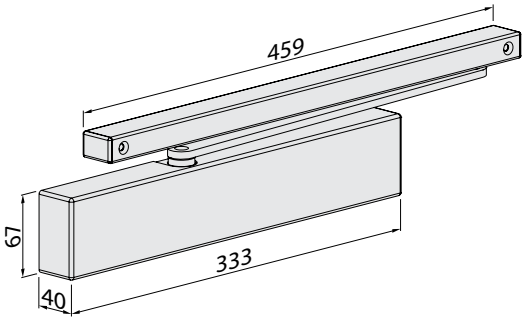

Dimensions: Multi-Genius

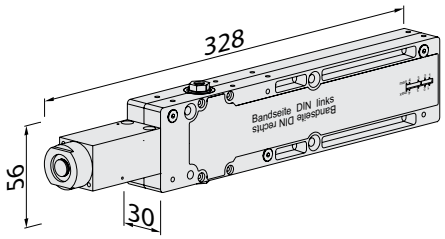

Dimensions: ITS Multi-Genius

ECO Multi-Genius ■ Find out the trick!

With a simple 90° rotation of the micro-hydraulic damping unit, the ITS Multi-Genius can be used either as an integrated or as a top-mounted door closer. By this, the ITS Multi-Genius connects intelligent door closer technology with practical use. One system for two different areas of application. Owing to the integrated eccentric link pull, the door can be opened without larger efforts of force. The construction of the ITS Multi-Genius ensures that the opening moment is falling rapidly. Result is a problem-free committing of the door which can be opened easily!

Moment curve Multi-Genius (EN 2 – 5, max. closing force)

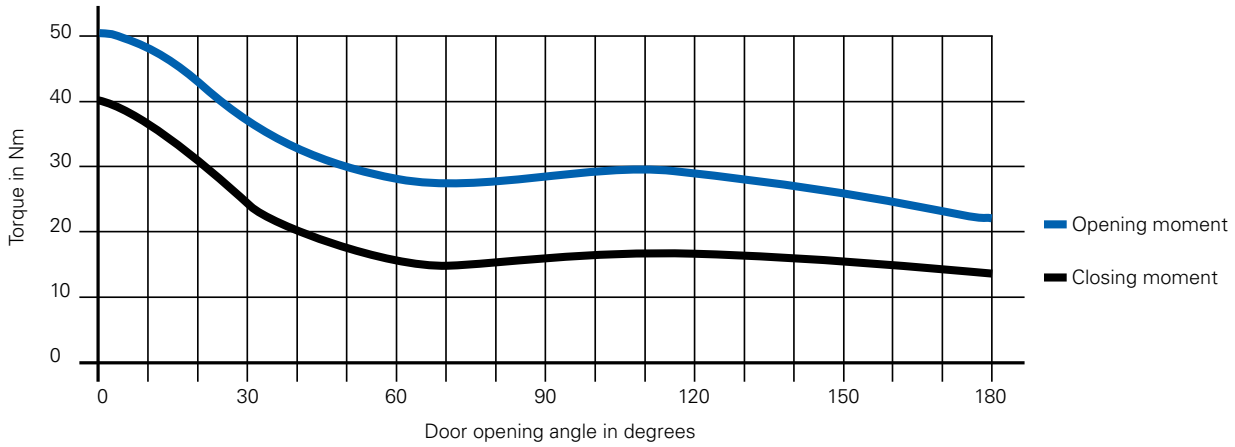

Order information

ECO ITS Multi-Genius ■ Product description

Dual technology for light and heavy interior doors

- By turning the micro-hydraulic damping unit, the Multi-Genius can be used as both concealed system (ITS) or surface-mounted door closer system.
- ITS Multi-Genius for use in wooden doors, profile frame doors made of aluminium/steel and doors made of sheet steel starting from >= 40 mm door thickness, only 30 mm depth, enables an unproblematic and invisible mounting in the door leaf without any additional reinforcement.
- Multi-Genius for the installation on the door leaf has a mounting height of only 40 mm. Incl. mounting plate (acc. to **EN 1154** supplementary sheet 1) and cover
- Hydraulic cylinder containing only 12ml oil has a huge advantage when it comes to the use in fire-protection doors
- The strongly decreasing opening moment allows an easier opening of the door
- Visible closing force display. A continous adjustment of the closing force is possible before installation
- Easy handling of adjusting the closing force and latching speed, even in mounted condition.
- Default delivery condition with pre-adjustment of size EN 3 and slide rail B. Slide rail Multi-Genius ITS-S can be offered in 20x20 mm and 20x12 mm
- Cover in stainless steel design satin or polished for door closer and slide rail

Article numbers

Door closer (concealed)		Article number
ITS M-G (1-4)	– integrated	358038M10Q10009
ITS M-G (2-5)	– integrated	358038A10Q10009

Door closer (surface mounted) slide rail B	Colour	Article number
Multi-Genius (1-4)	Stainless steel satin	308038M10Q10009
Multi-Genius (1-4)	Stainless steel polished	308038M20Q10009
Multi-Genius (2-5)	Stainless steel satin	308038A10Q10009
Multi-Genius (2-5)	Stainless steel polished	308038A20Q10009

Swissdoor ApS • Stenhuggervej 2 • 5471 Søndersø • Danmark Telefon +45 86 28 00 00 • mail@swissdoor.dk • www.swissdoor.dk

SWiSSDOOR
DØRTEKNIK FOR PROFESSIONELLE

La Roche, Basel,
Switzerland

ECO **Multi-Genius**
Small. Compact. Flexible.

ECO offers as the first manufacturer by the ITS Multi-Genius a dual-technology door closer system, which can be installed as integrated system into the door as well as conventional top-mounted system to the door. As integrated door closer system the ITS-Multi-Genius fulfills all requirements regarding functionality and timeless elegance. By its slim construction it can be integrated without problems invisibly into the door leaf. And this already starting from a door leaf thickness of 40 mm.

Alternatively, the ITS Multi-Genius can be used also as top-mounted door closer system, which meets all requests. ECO covers made of alternatively satin or polished stainless steel give beyond that a special formative note to the application environment.

Swissdoor ApS • Stenhuggervej 2 • 5471 Søndersø • Danmark Telefon +45 86 28 00 00 • mail@swissdoor.dk • www.swissdoor.dk

Installation drawing

with slide rail 20 x 20 (20 x 12), illustration DIN left-door, DIN right laterally reversed

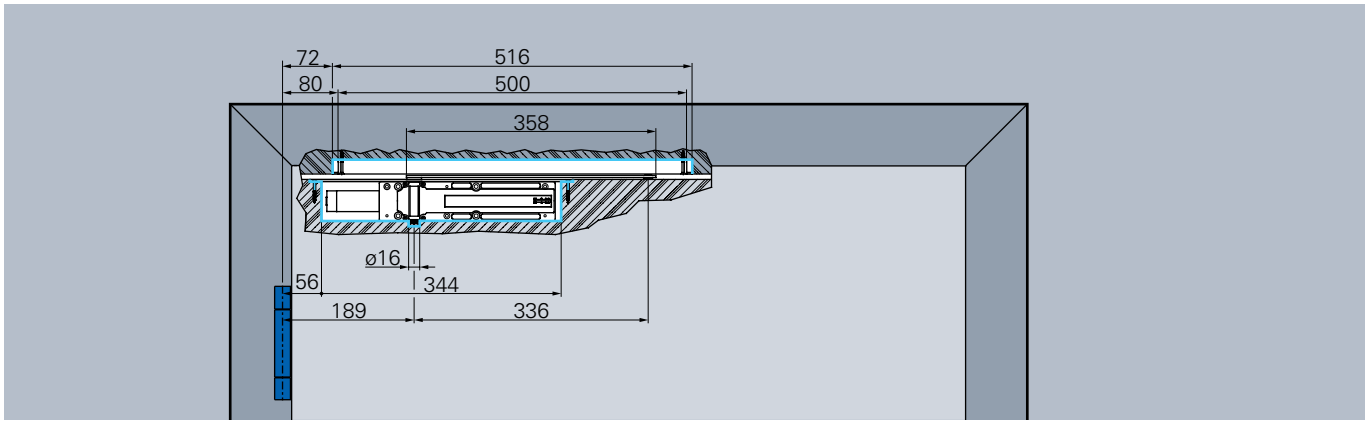

Installation Multi-Genius with slide rail 20 x 20 (20 x 12) in a wooden door

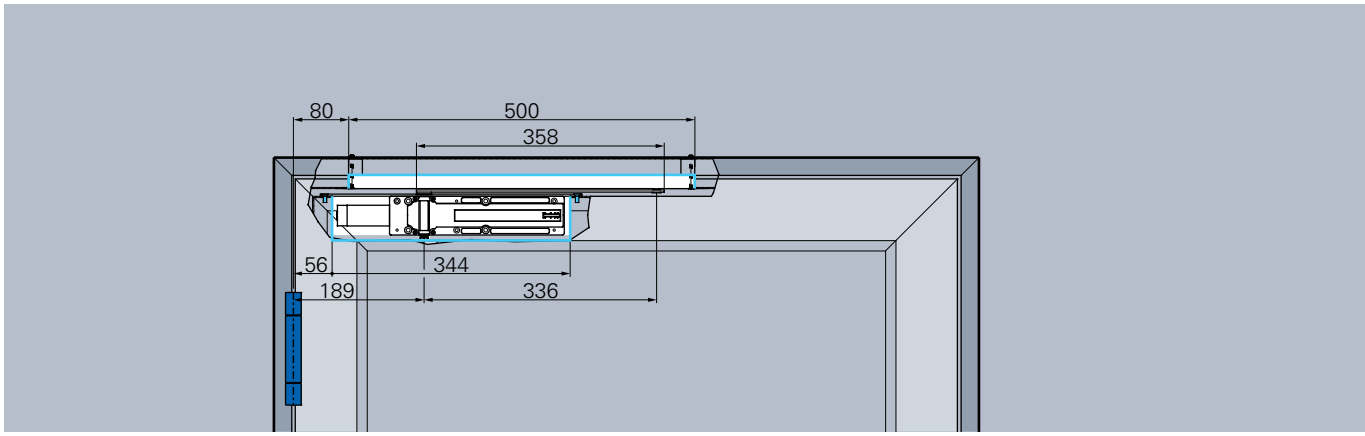

Installation Multi-Genius with slide rail 20 x 20 (20 x 12) in a profile frame door

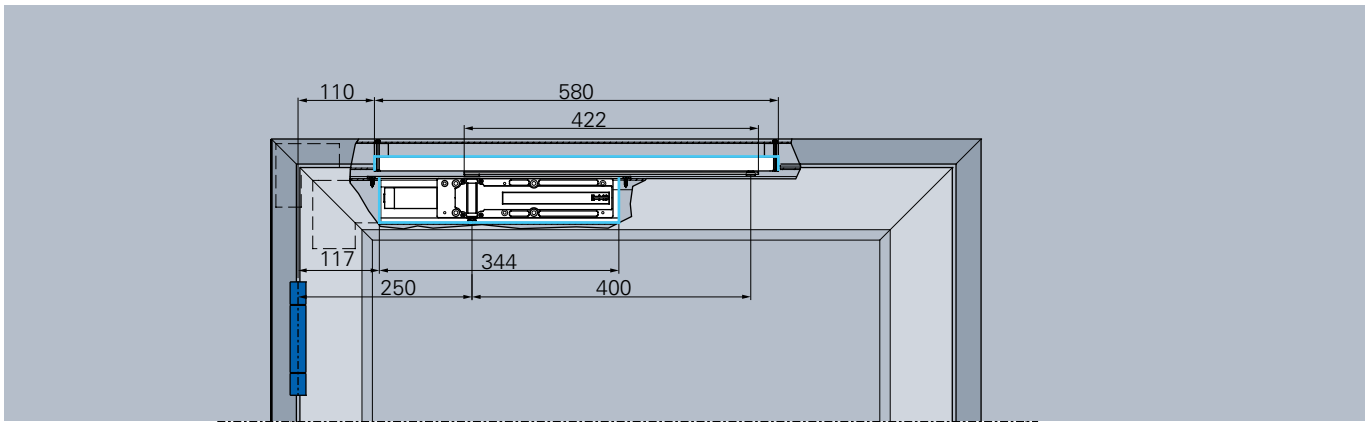

Installation Multi-Genius with slide rail 20 x 20 (20 x 12) in a profile frame door with angle brackets

Swissdoor ApS • Stenhuggervej 2 • 5471 Søndersø • Danmark Telefon +45 86 28 00 00 • mail@swissdoor.dk • www.swissdoor.dk

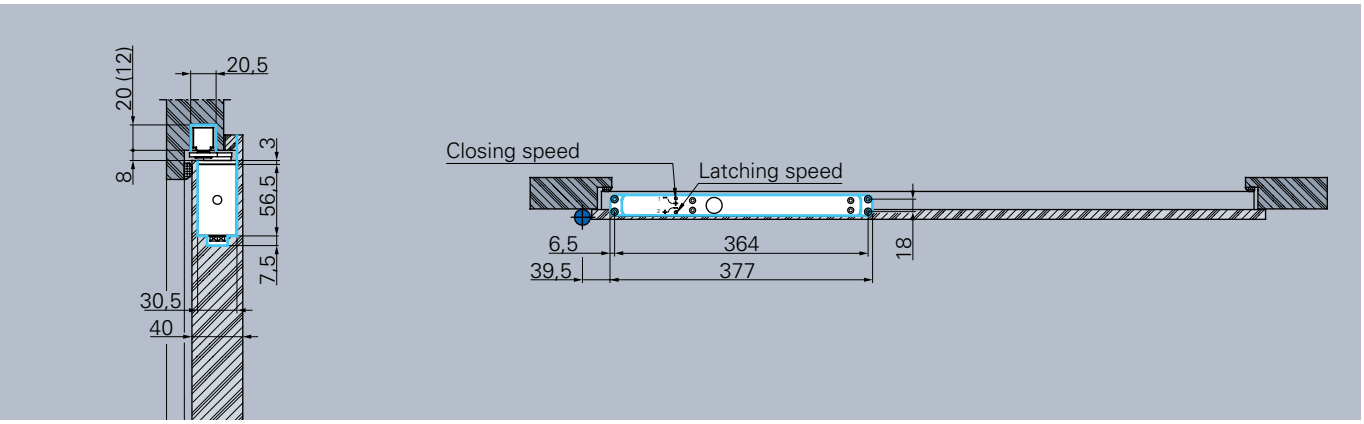
20,5
20 (12)
8
3
56,5
7,5
30,5
40
Closing speed
Latching speed
6,5
364
39,5
377
18

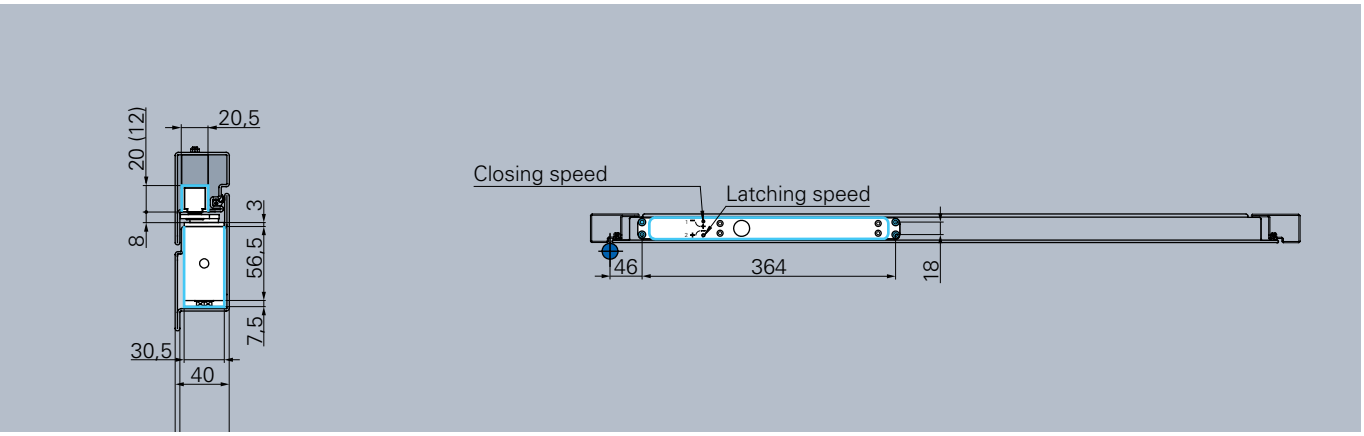
20,5
20 (12)
8
3
56,5
7,5
30,5
40
Closing speed
Latching speed
46
364
18

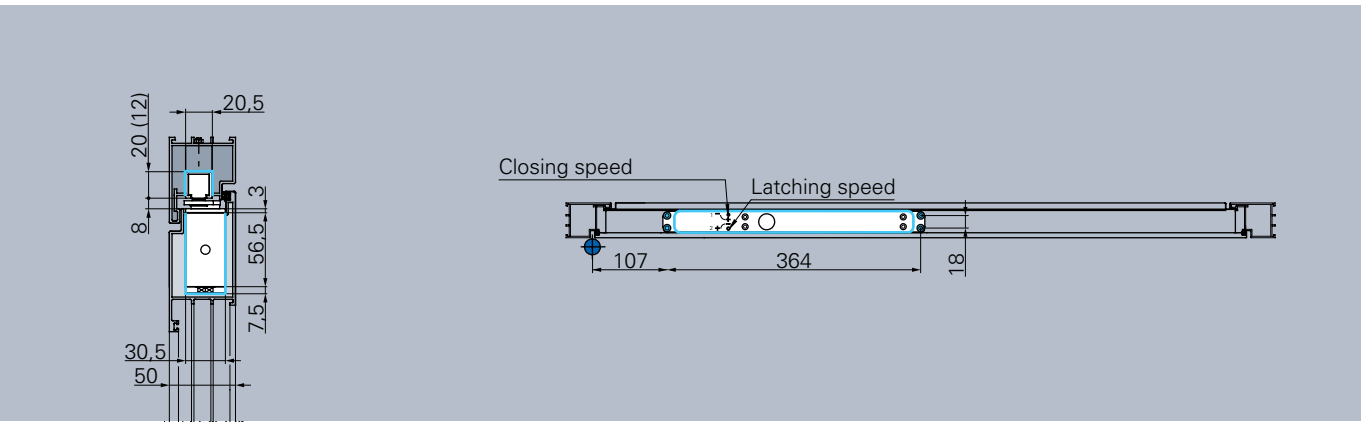
20,5
20 (12)
8
3
56,5
7,5
30,5
50
Closing speed
Latching speed
107
364
18

Installation drawing

with slide rail 31 x 21 with MFA, illustration DIN left-door, DIN right laterally reversed

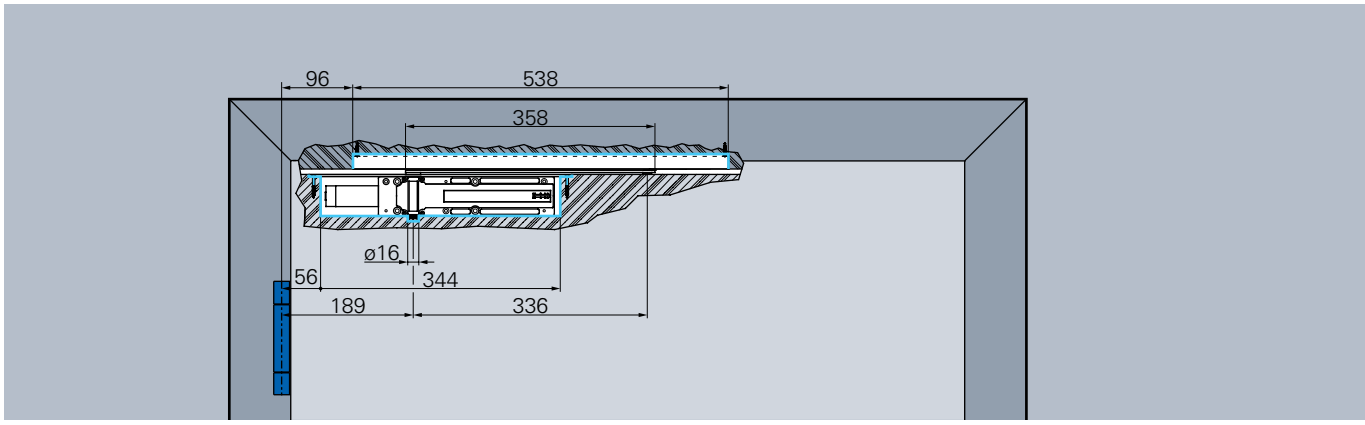

Installation Multi-Genius with slide rail 31 x 21 with MFA in a wooden door

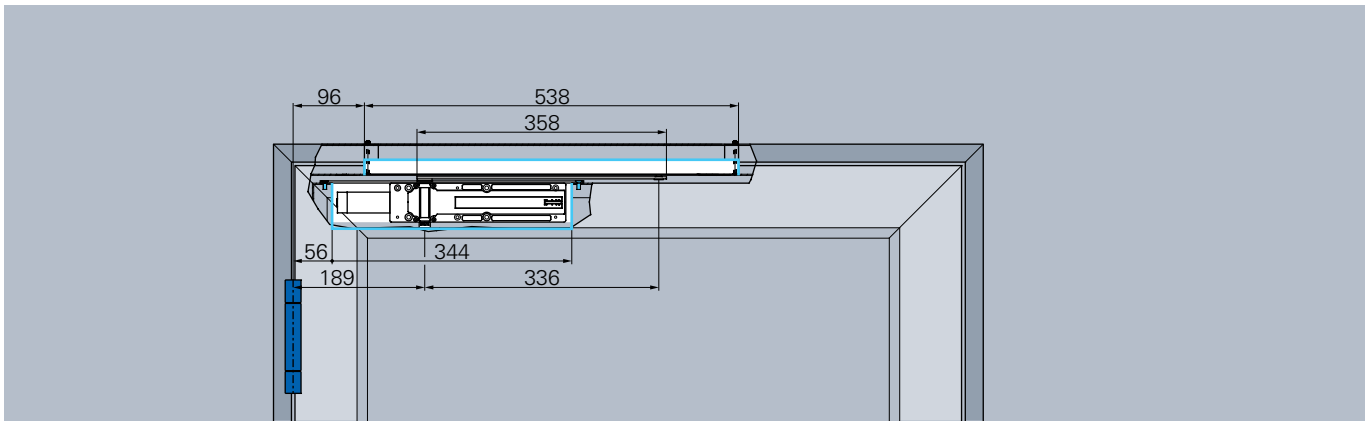

Installation Multi-Genius with slide rail 31 x 21 with MFA in a profile frame door

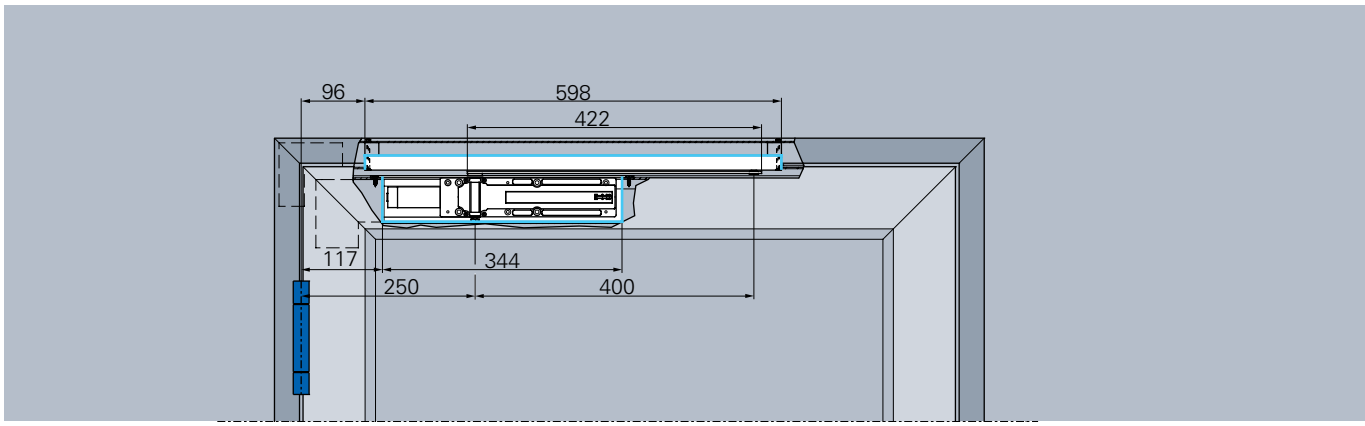

Installation Multi-Genius with slide rail 31 x 21 with MFA in a profile frame door with angle brackets.

Swissdoor ApS • Stenhuggervej 2 • 5471 Søndersø • Danmark Telefon +45 86 28 00 00 • mail@swissdoor.dk • www.swissdoor.dk

ITS Multi-Genius

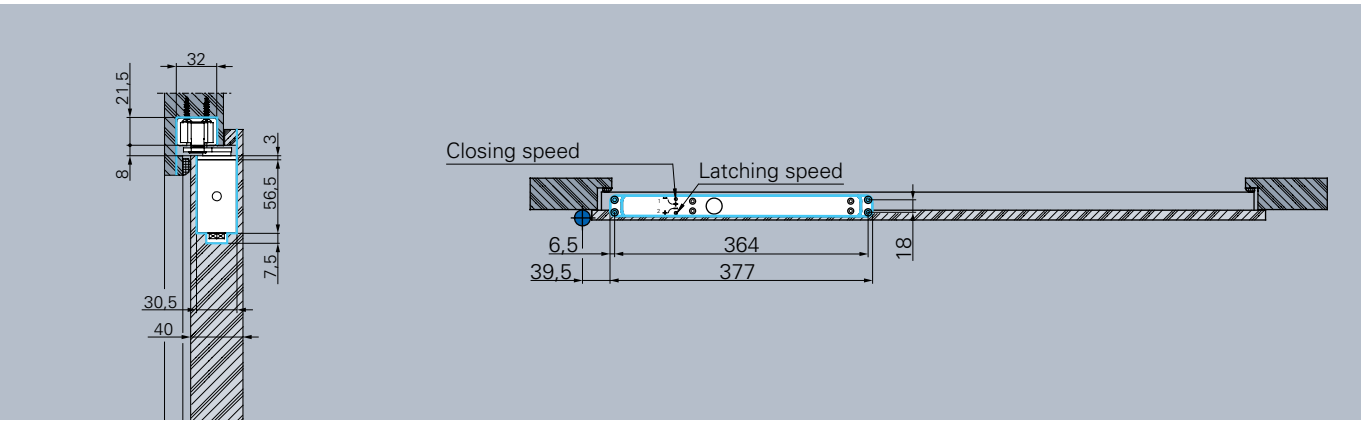

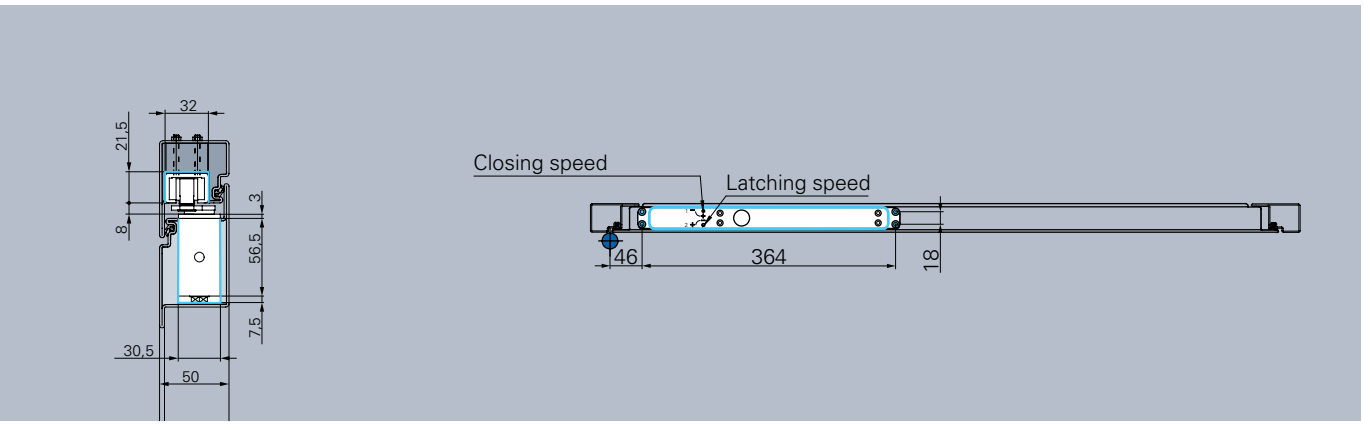

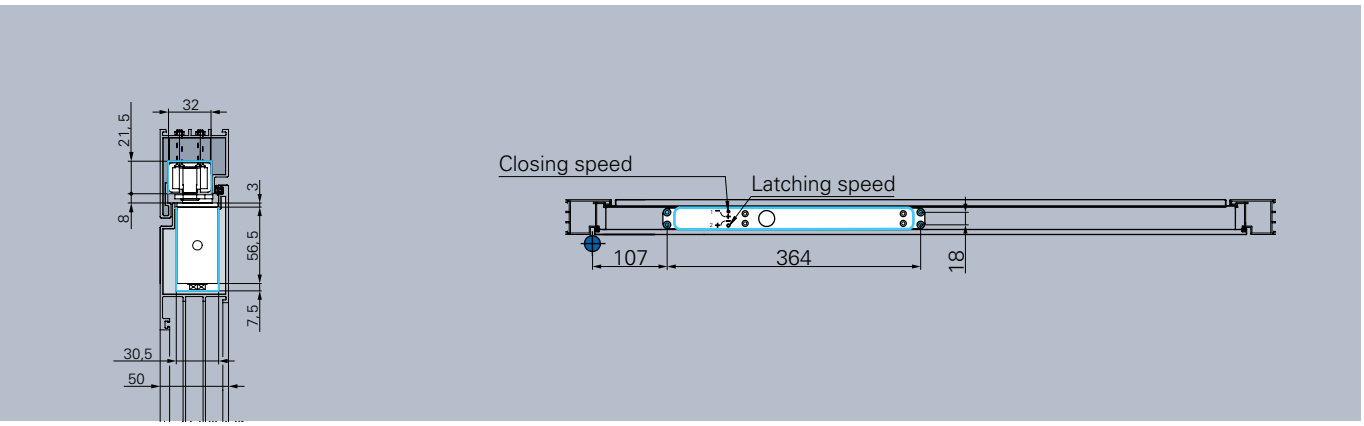

2

Installation drawing

with slide rail 31 x 21 with EF, illustration DIN left-door, DIN right laterally reversed

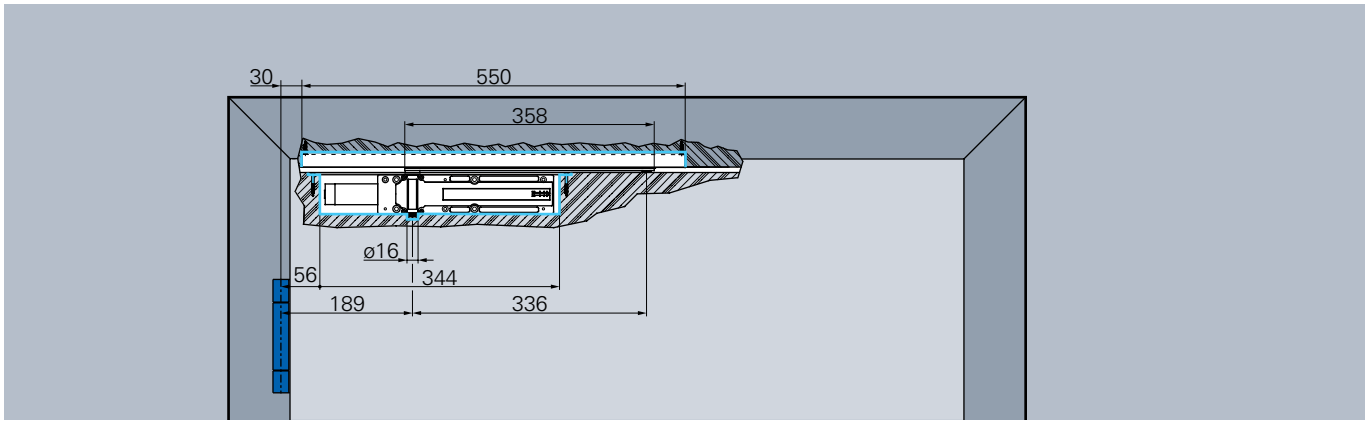

Installation Multi-Genius with slide rail 31 x 21 with EF in a wooden door

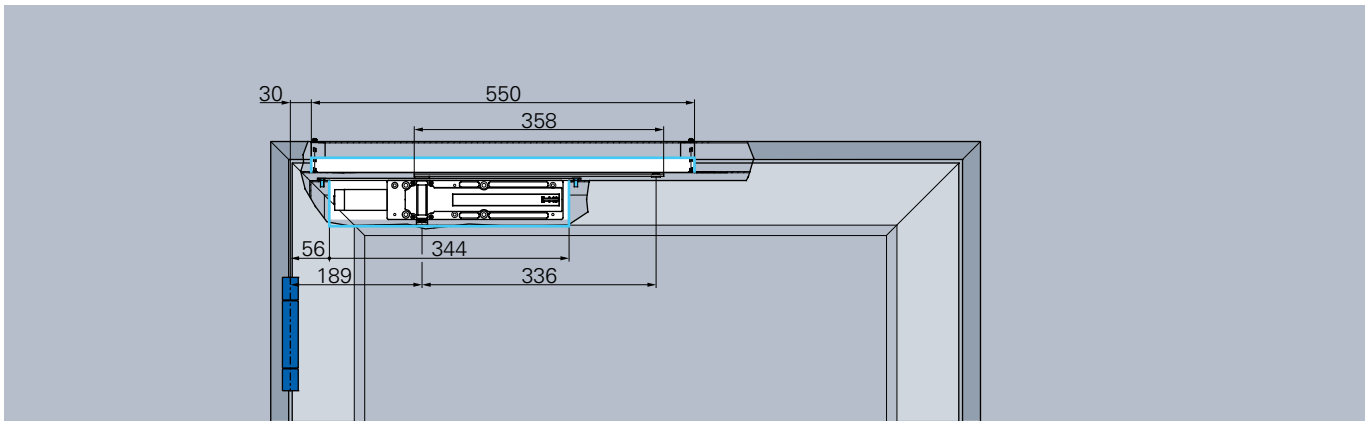

Installation Multi-Genius with slide rail 31 x 21 with EF in a profile frame door

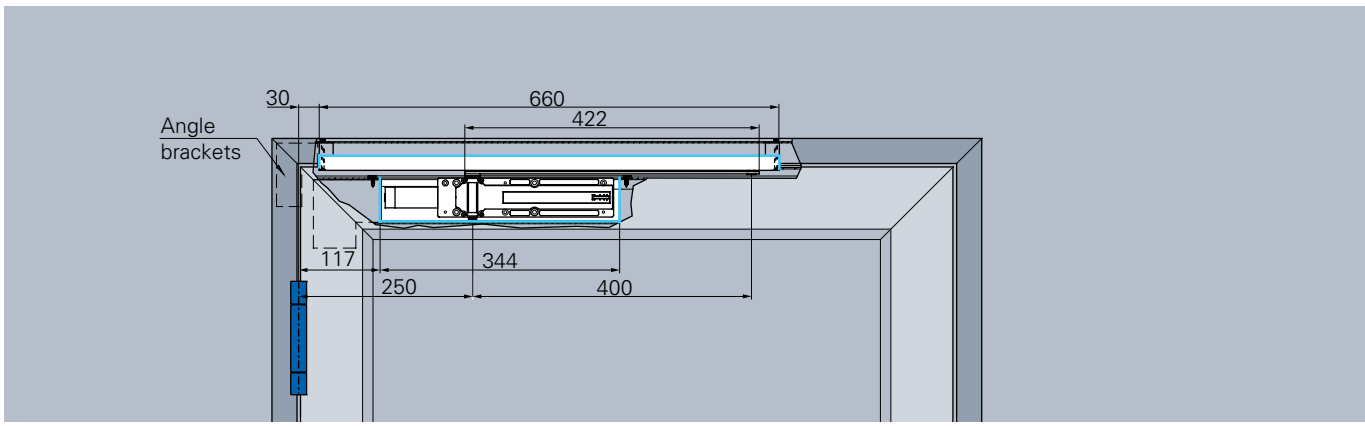

Installation Multi-Genius with slide rail 31 x 21 with EF in a profile frame door with angle brackets

Swissdoor ApS • Stenhuggervej 2 • 5471 Søndersø • Danmark Telefon +45 86 28 00 00 • mail@swissdoor.dk • www.swissdoor.dk

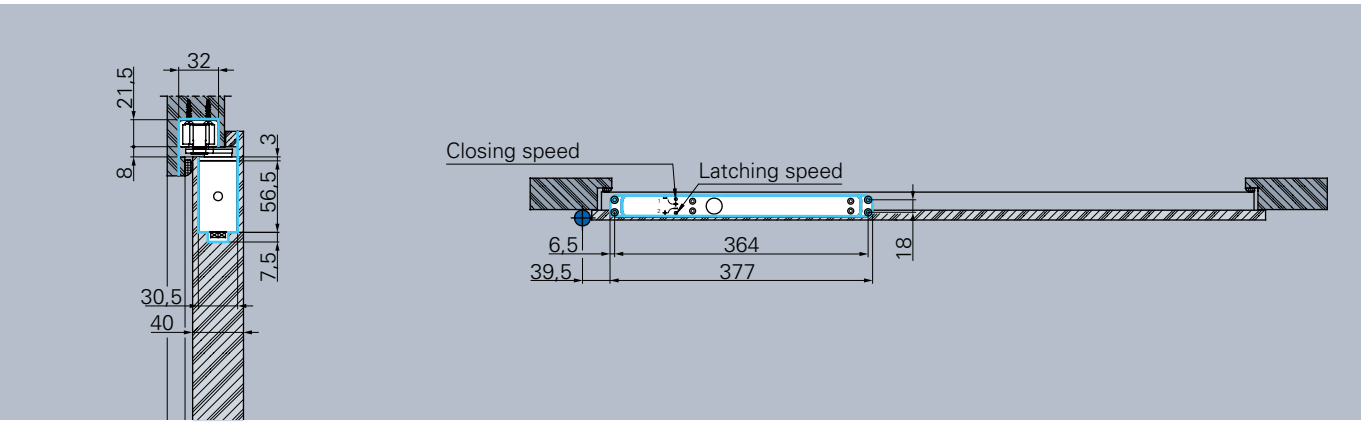
32
21,5
8
3
56,5
7,5
30,5
40
Closing speed
Latching speed
6,5
39,5
364
377
18

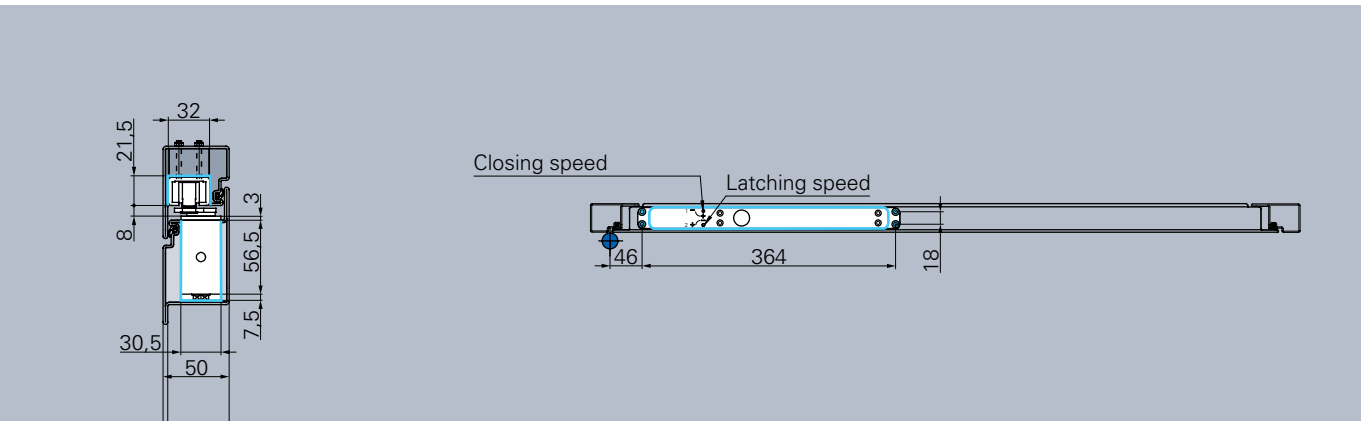
32
21,5
8
3
56,5
7,5
30,5
50
Closing speed
Latching speed
46
364
18

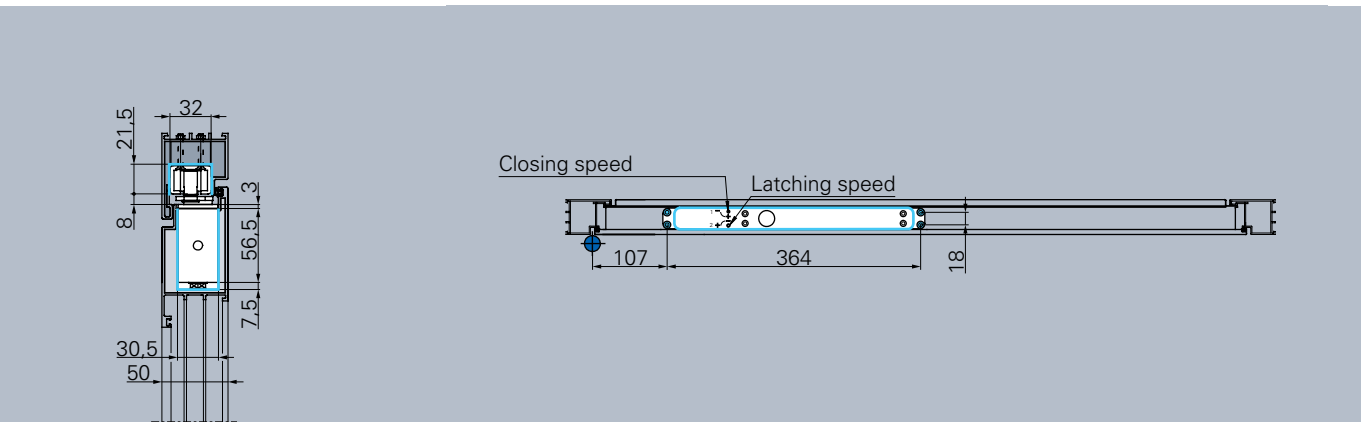
32
21,5
8
3
56,5
7,5
30,5
50
Closing speed
Latching speed
107
364
18

Installation drawing

with slide rail 21,5 x 31 with EF, illustration DIN left-door, DIN right laterally reversed

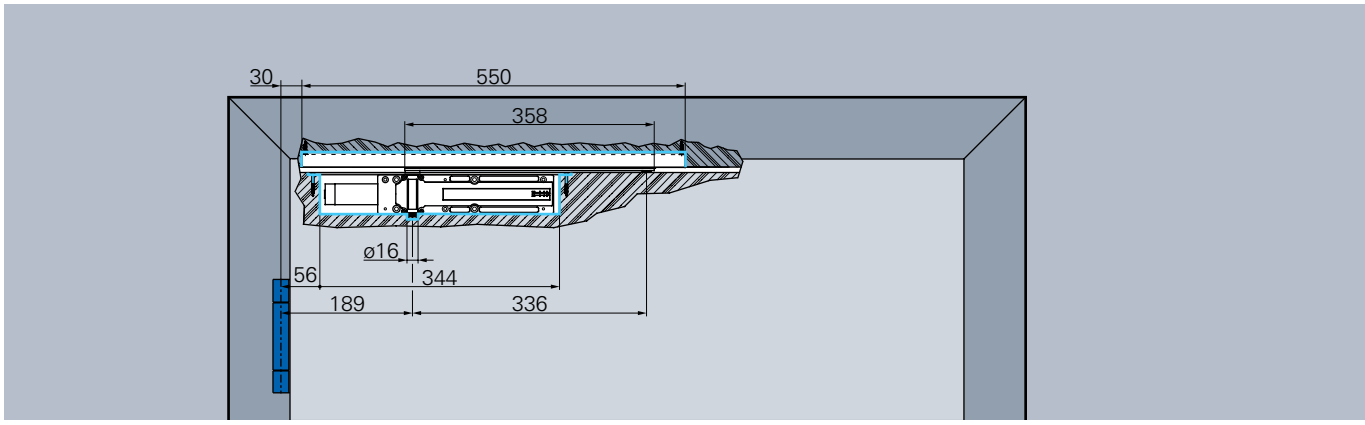

Installation Multi-Genius with slide rail 21,5 x 31 with EF in a wooden door

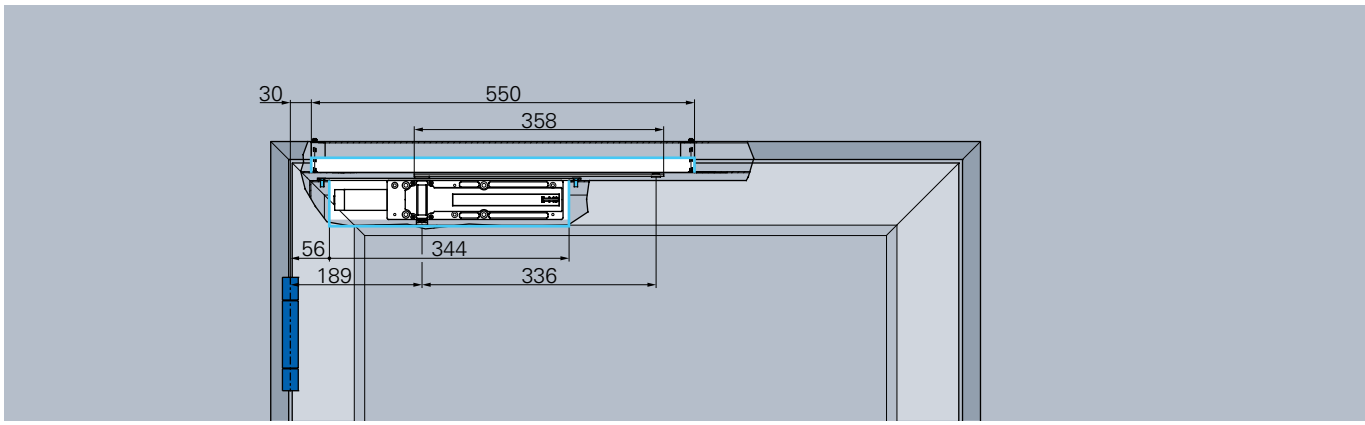

Installation Multi-Genius with slide rail 21,5 x 31 with EF in a profile frame door

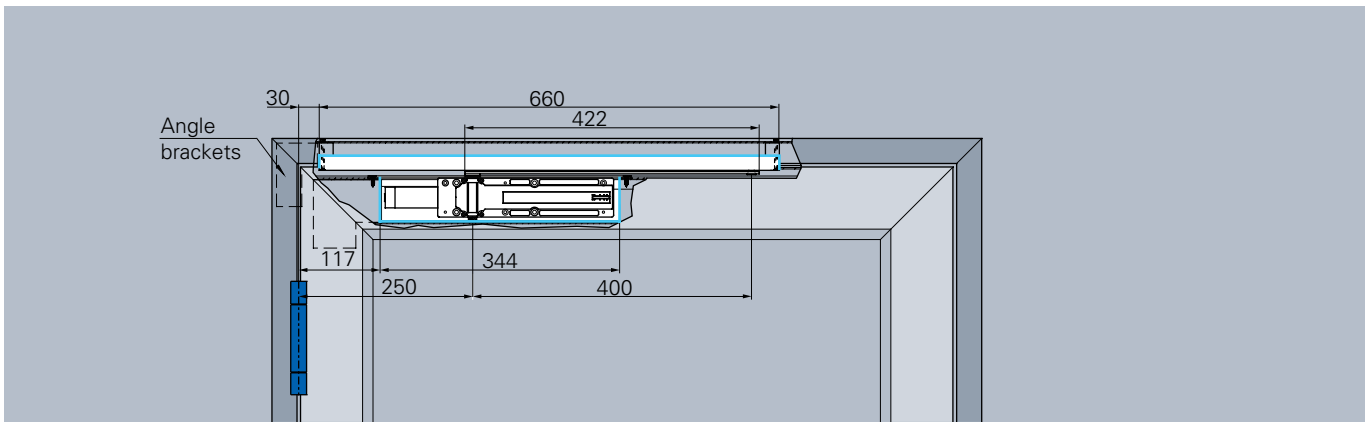

Installation Multi-Genius with slide rail 21,5 x 31 with EF in a profile frame door with angle brackets

Swissdoor ApS • Stenhuggervej 2 • 5471 Søndersø • Danmark Telefon +45 86 28 00 00 • mail@swissdoor.dk • www.swissdoor.dk

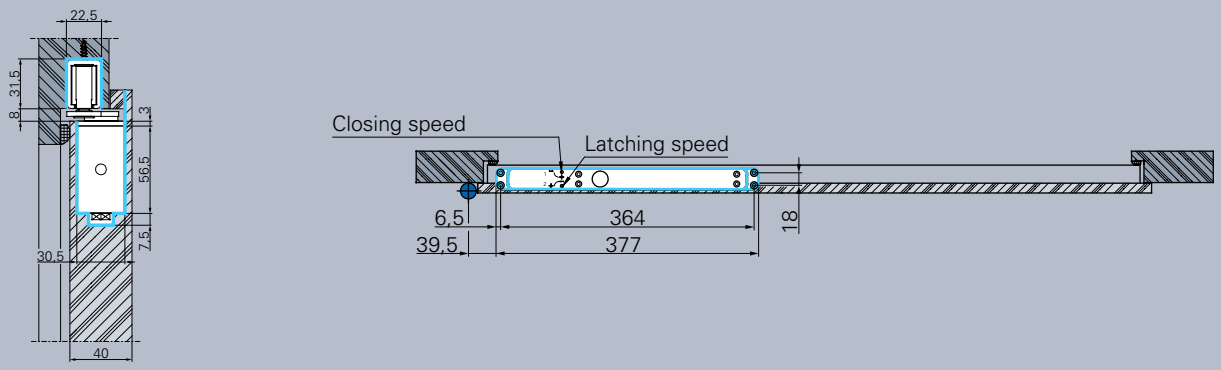
22,5
31,5
8
3
56,5
7,5
30,5
40
Closing speed
Latching speed
6,5
39,5
364
377
18

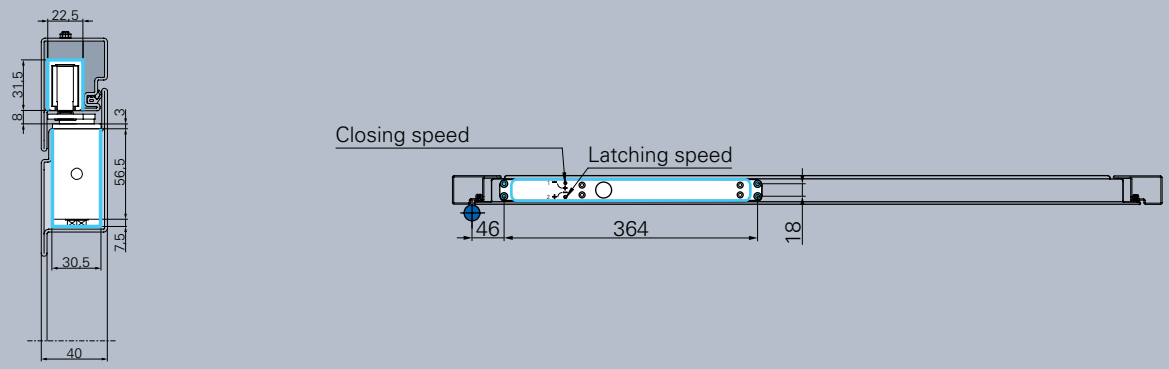
22,5
31,5
8
3
56,5
7,5
30,5
40
Closing speed
Latching speed
46
364
18

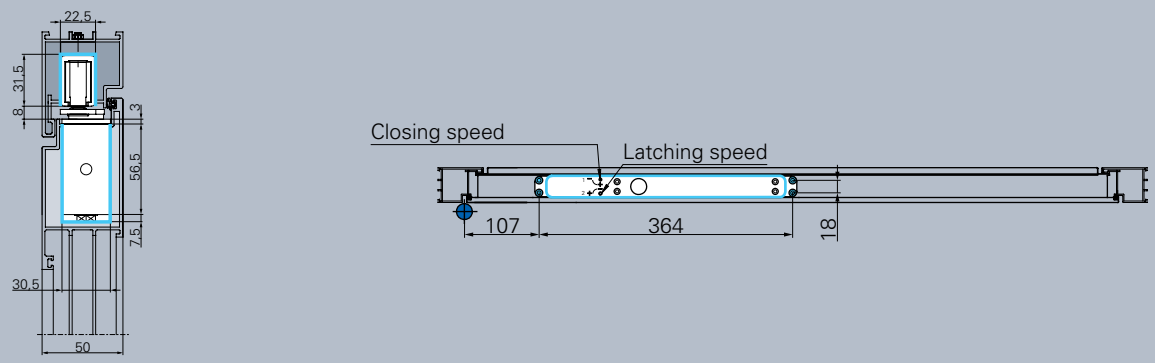
22,5
31,5
8
3
56,5
7,5
30,5
50
Closing speed
Latching speed
107
364
18

Installation drawing

SR in a wooden door

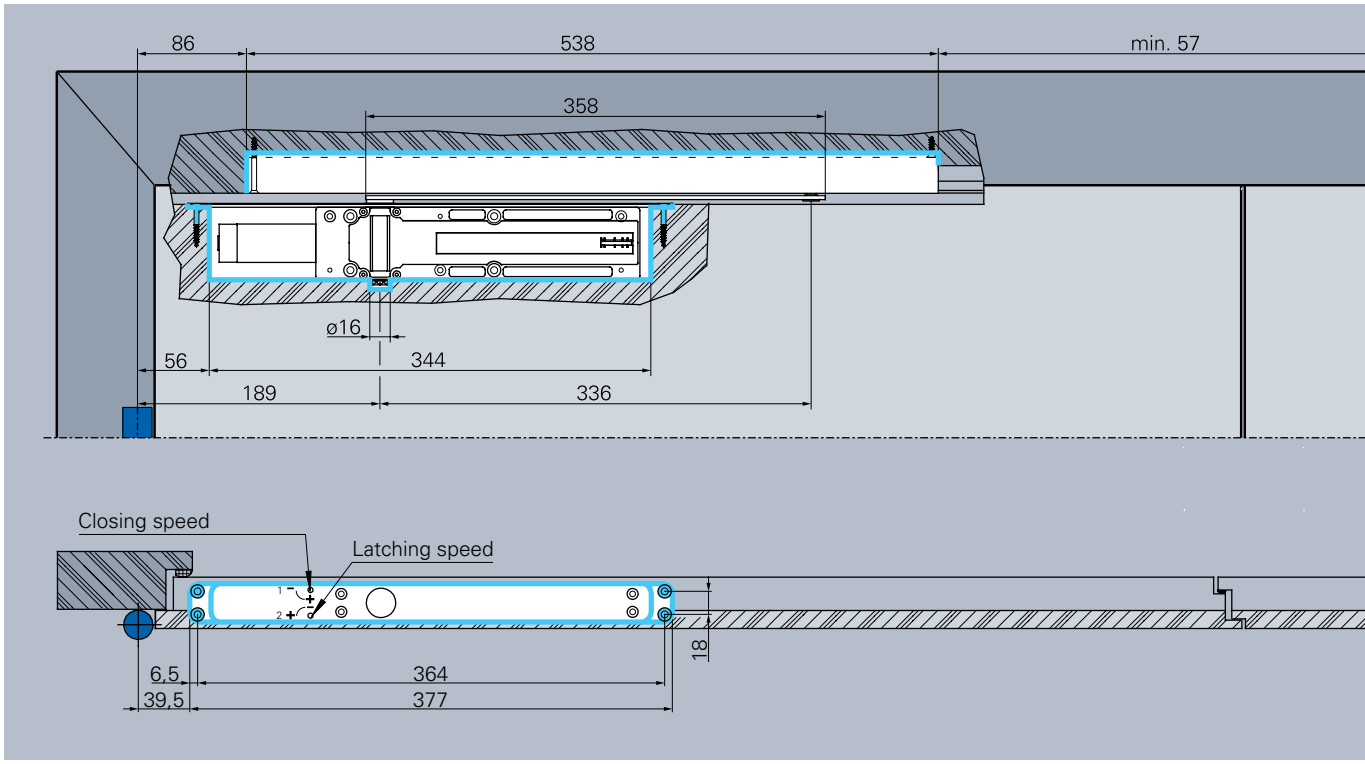

Installation Multi-Genius with slide rail 21,5 x 31 with SR in a wooden door, illustration DIN left, DIN right laterally reversed

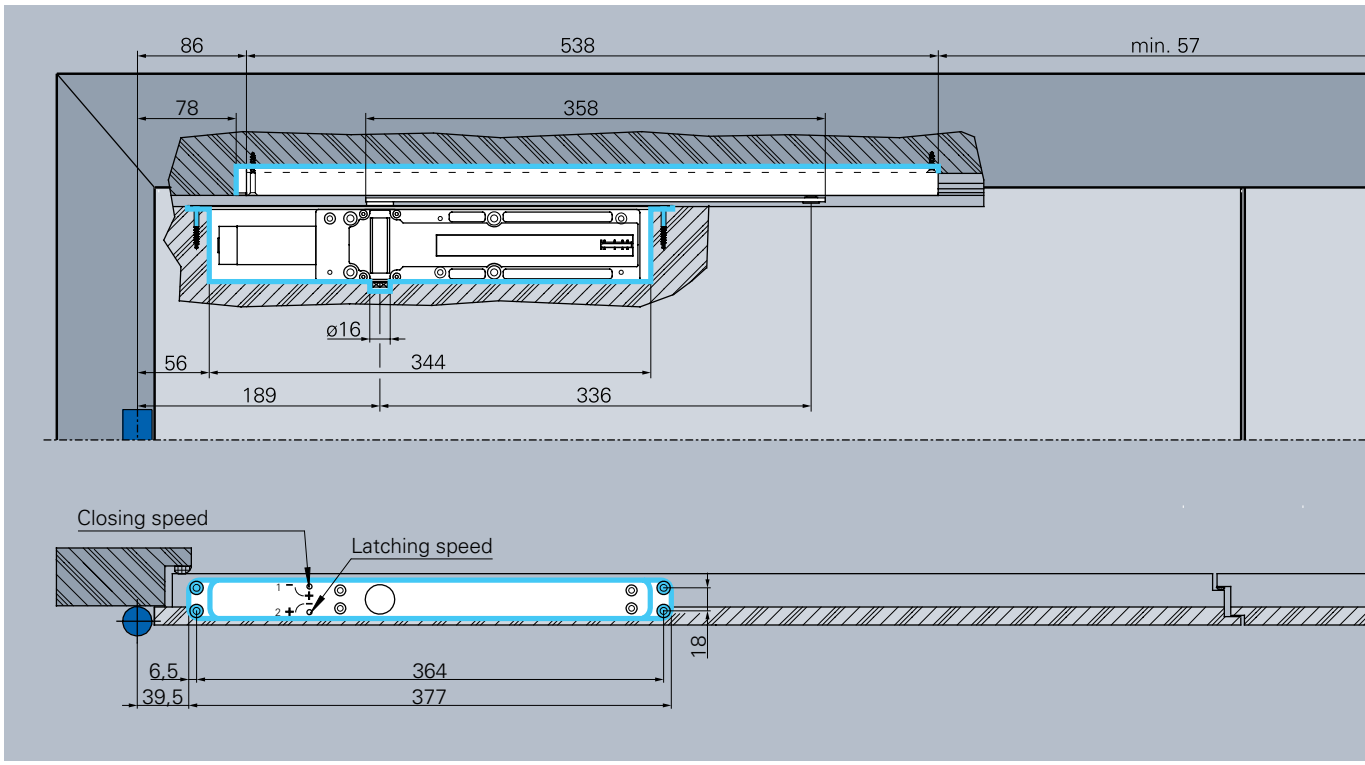

Installation Multi-Genius with slide rail 31 x 21 with SR in a wooden door, illustration DIN left, DIN right laterally reversed

Swissdoor ApS • Stenhuggervej 2 • 5471 Søndersø • Danmark Telefon +45 86 28 00 00 • mail@swissdoor.dk • www.swissdoor.dk

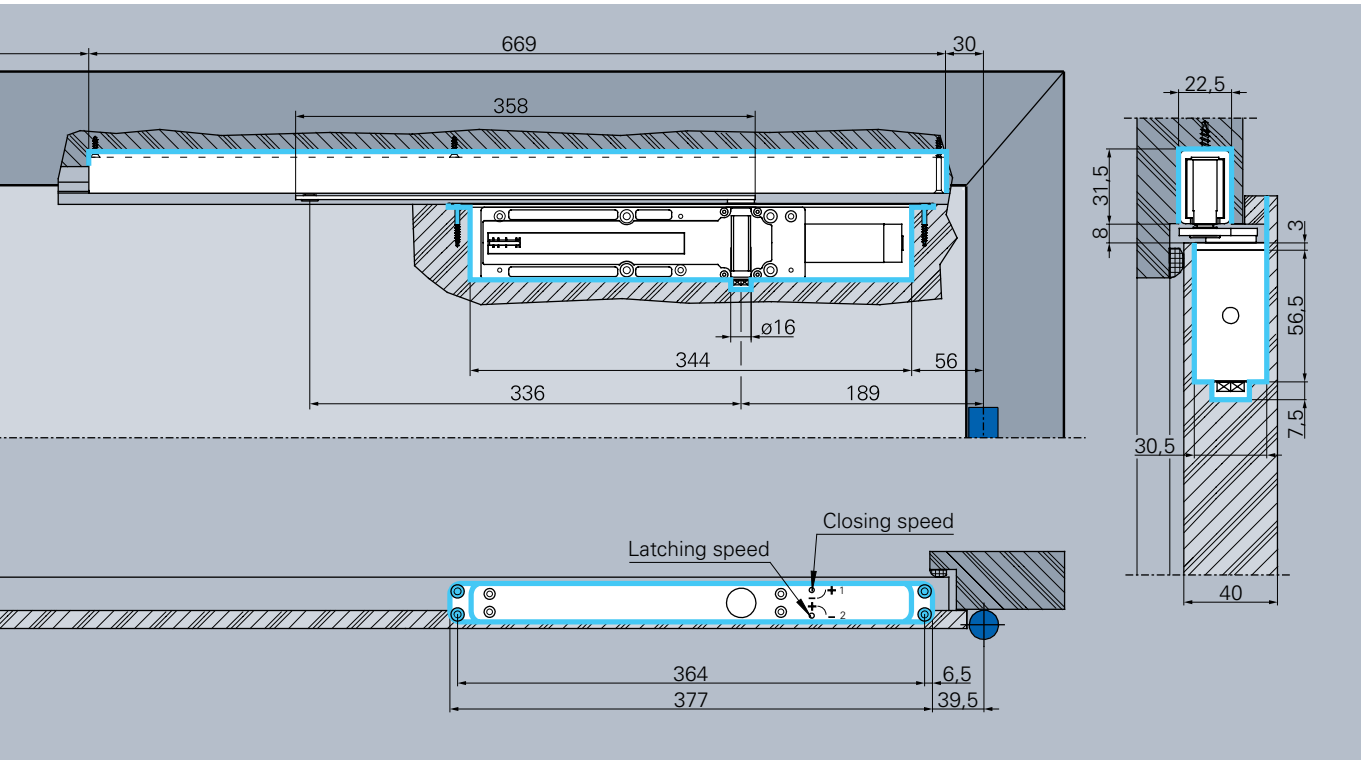
669
30
358
22,5
31,5
8
3
56,5
7,5
ø16
344
56
336
189
30,5
40
Closing speed
Latching speed
364
6,5
377
39,5

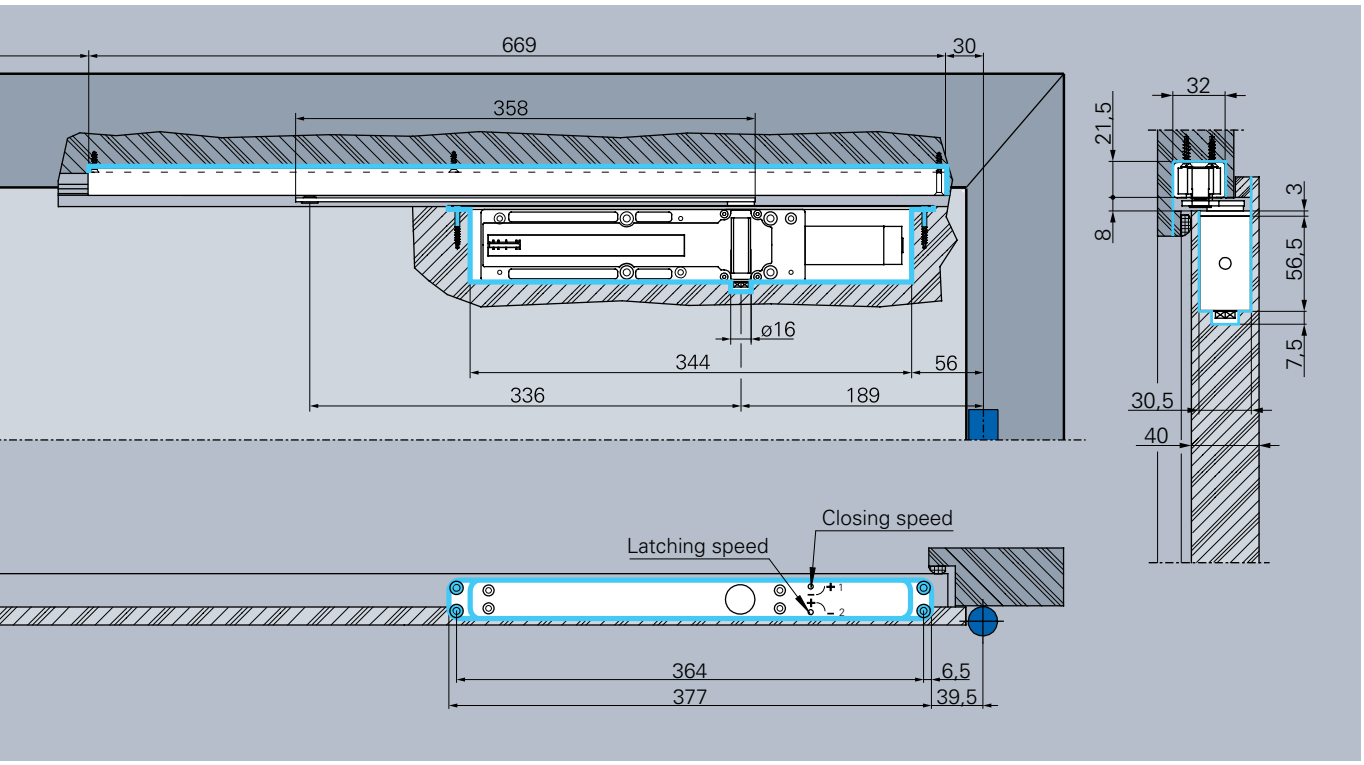
669
30
358
32
21,5
8
3
56,5
7,5
ø16
344
56
336
189
30,5
40
Closing speed
Latching speed
364
6,5
377
39,5

Installation drawing

SR in a profile frame door

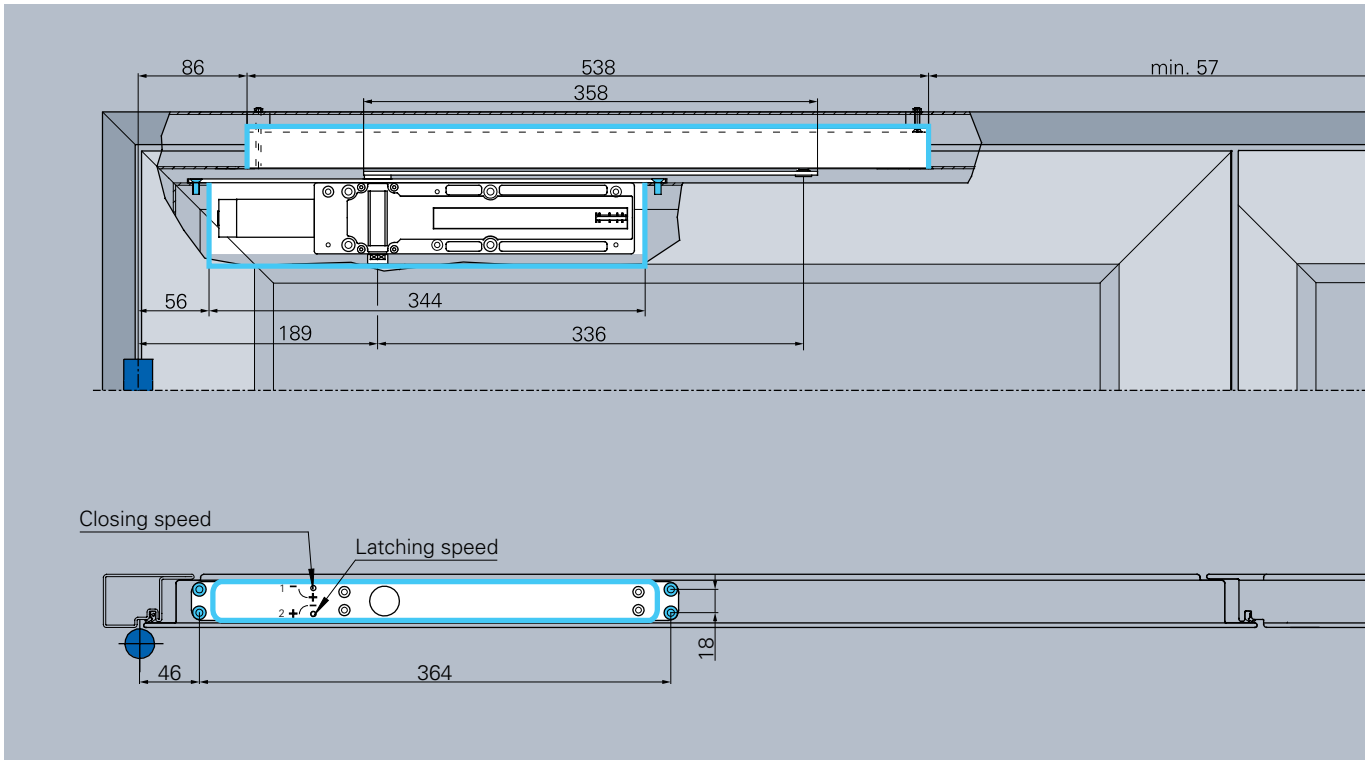

Installation Multi-Genius with slide rail 21,5 x 31 with SR in a profile frame door, illustration DIN left, DIN right laterally reversed

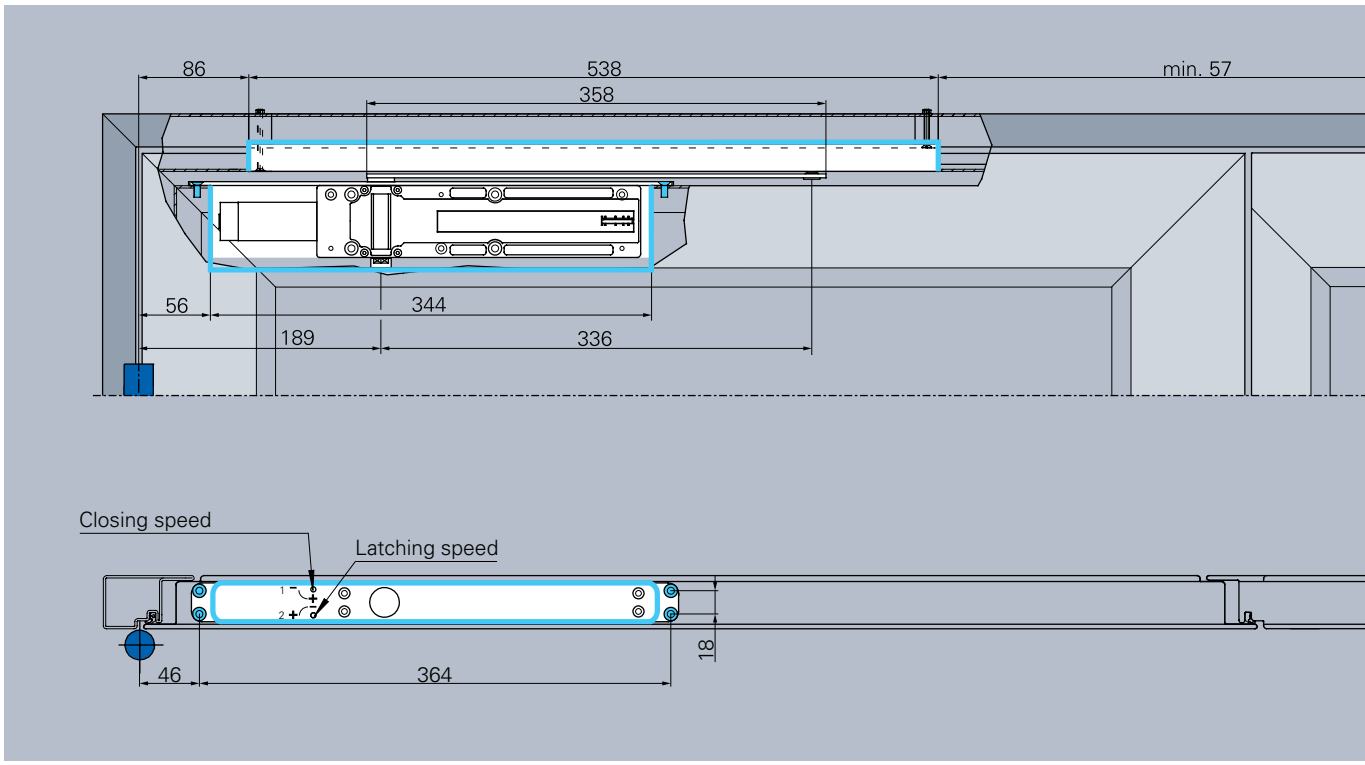

Installation Multi-Genius with slide rail 31 x 21 with SR in a profile frame door with angle brackets, illustration DIN left , DIN right laterally reversed

Swissdoor ApS • Stenhuggervej 2 • 5471 Søndersø • Danmark Telefon +45 86 28 00 00 • mail@swissdoor.dk • www.swissdoor.dk

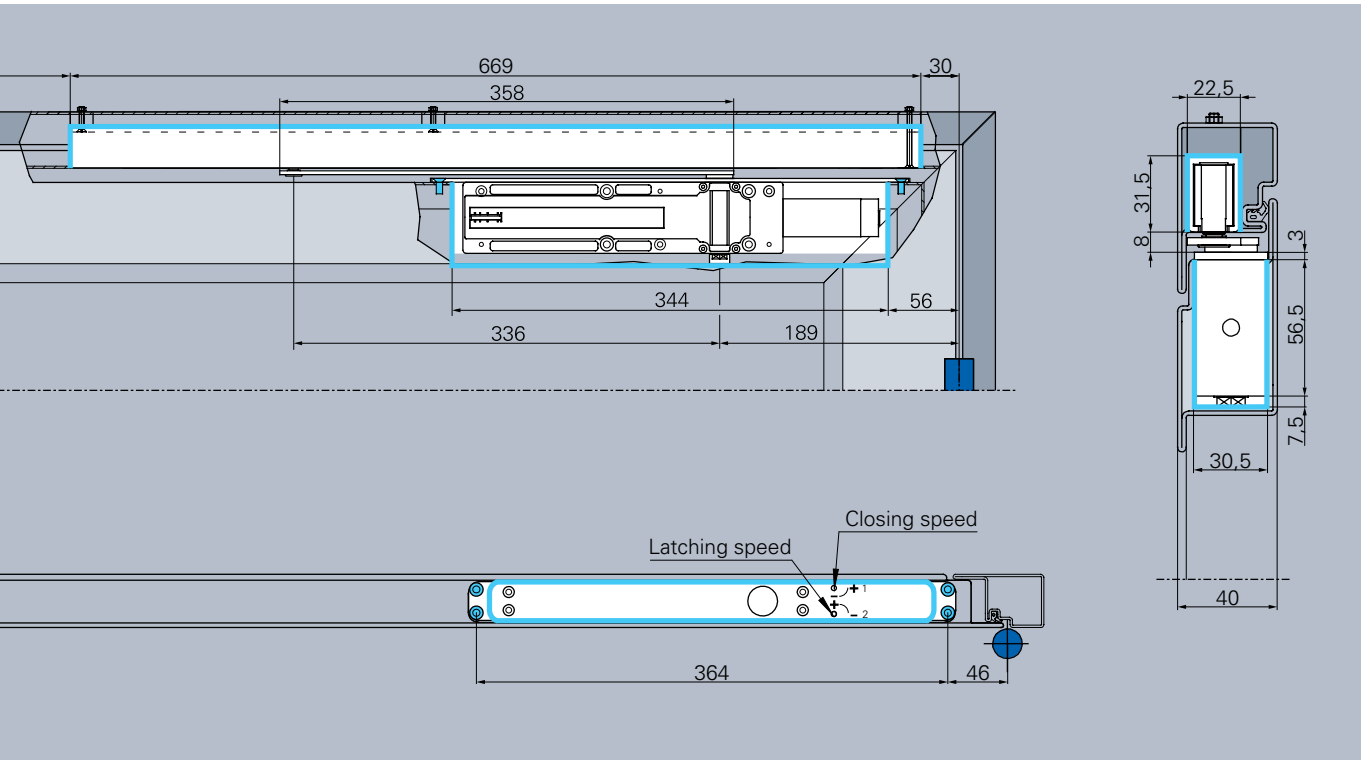
669
30
358
344
56
336
189
364
46
Closing speed
Latching speed
22,5
31,5
8
3
56,5
7,5
30,5
40

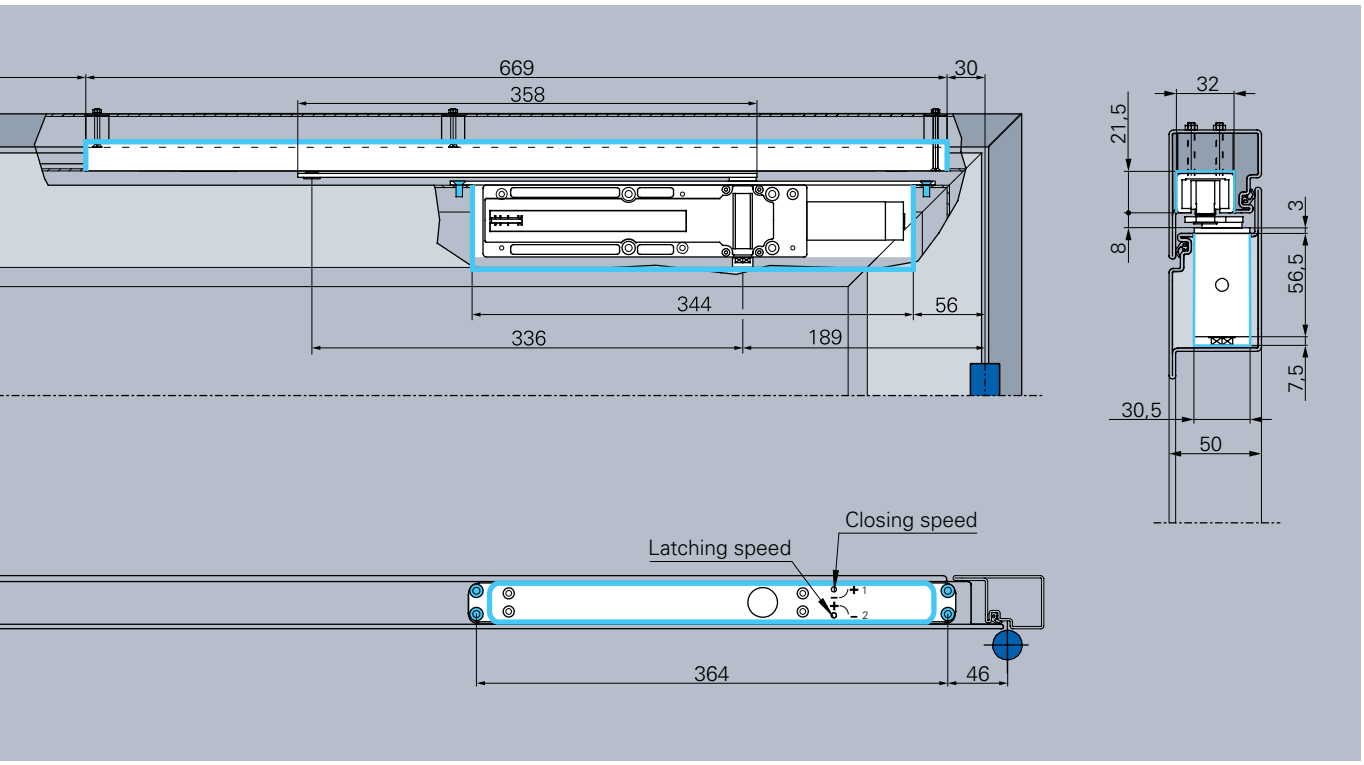
669
30
358
344
56
336
189
364
46
Closing speed
Latching speed
32
21,5
8
3
56,5
7,5
30,5
50

Installation drawing

SR in a profile frame door with angle brackets

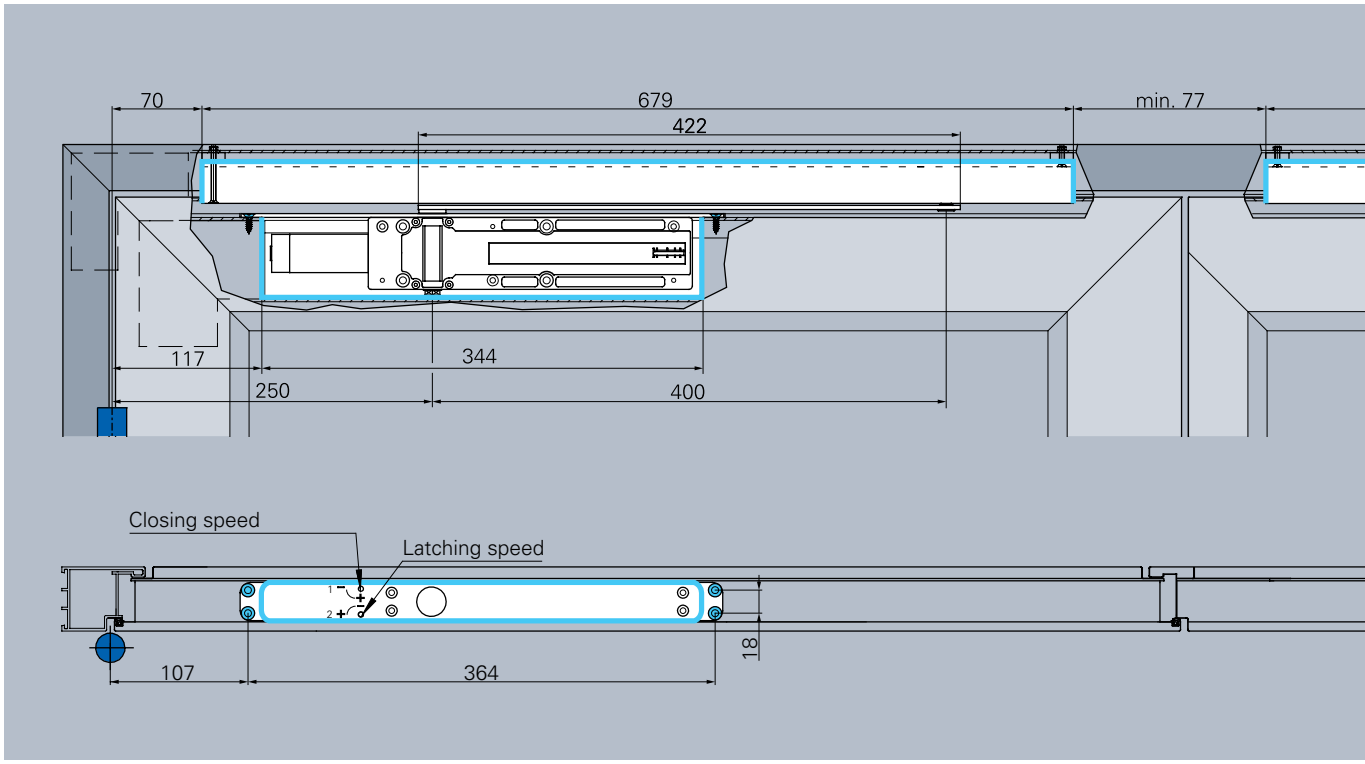

Installation Multi-Genius with slide rail 21,5 x 31 with SR in a profile frame door with angle brackets, illustration DIN left, DIN right laterally reversed

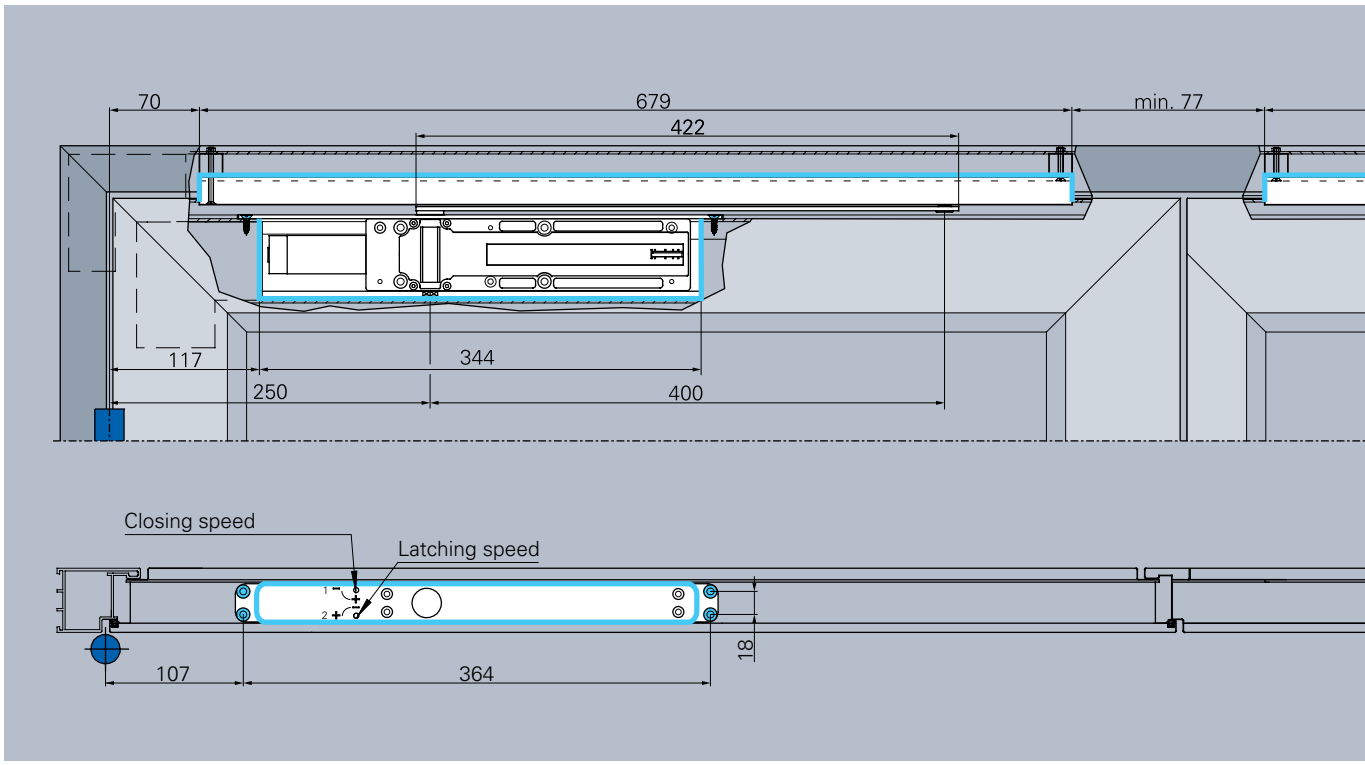

Installation Multi-Genius with slide rail 31 x 21 with SR in a profile frame door with angle brackets, illustration DIN left, DIN right laterally reversed

Swissdoor ApS • Stenhuggervej 2 • 5471 Søndersø • Danmark Telefon +45 86 28 00 00 • mail@swissdoor.dk • www.swissdoor.dk

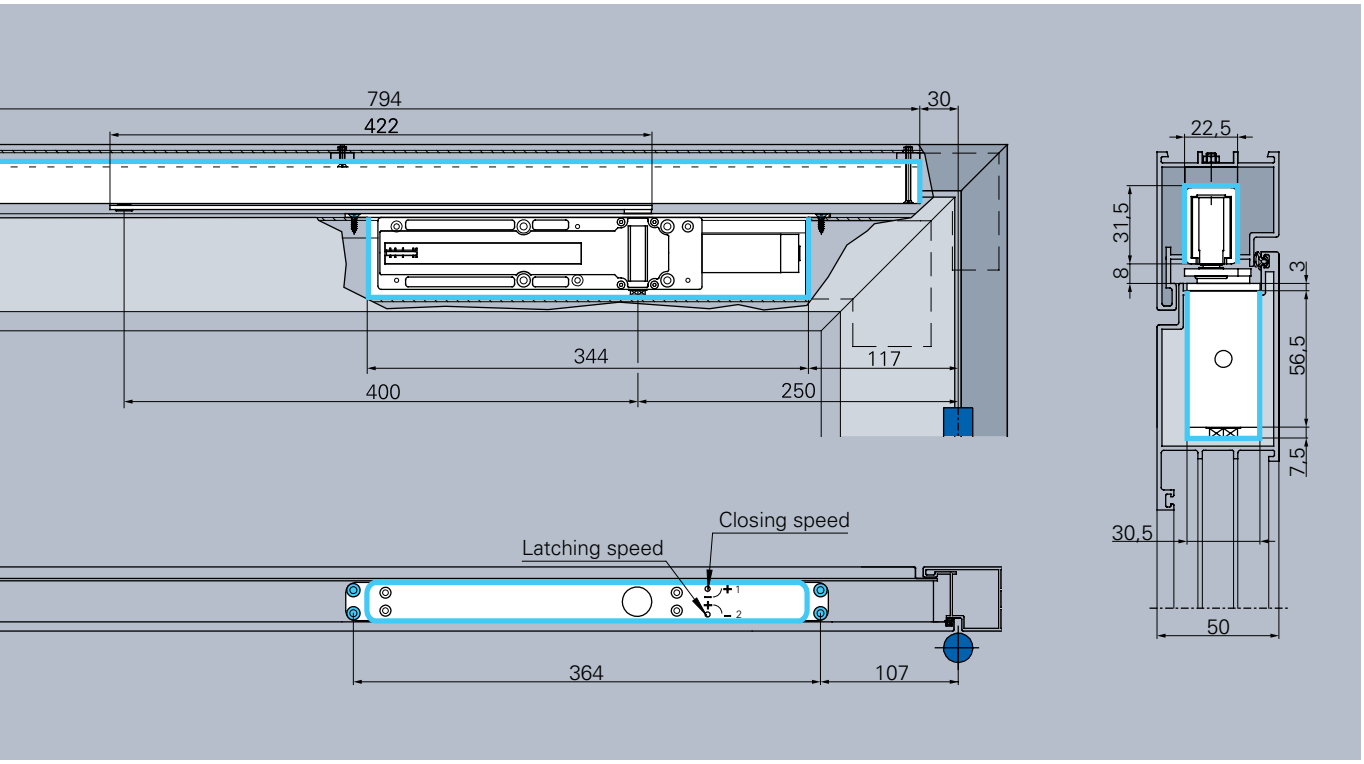
794
422
30
22,5
31,5
8
3
56,5
7,5
344
117
400
250
30,5
50
Closing speed
Latching speed
364
107

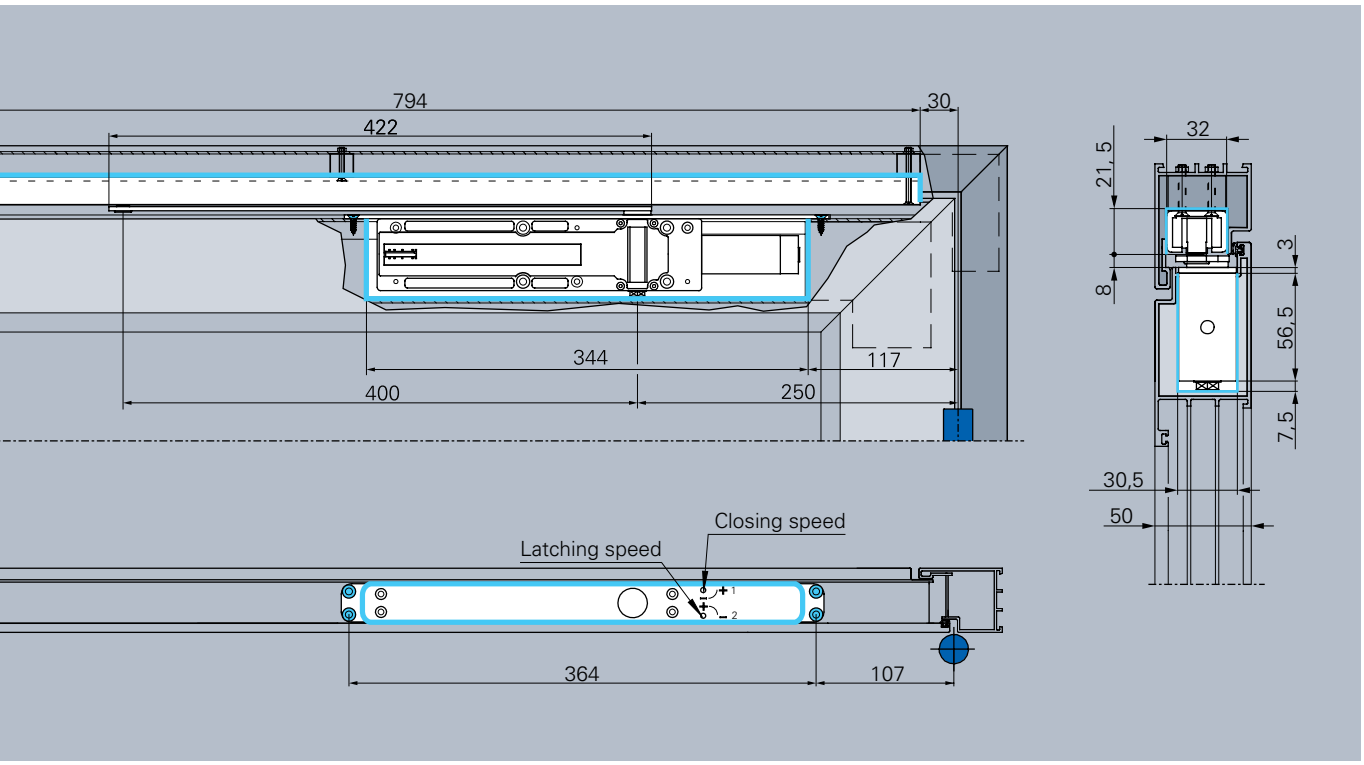
794
422
30
32
21,5
8
3
56,5
7,5
344
117
400
250
30,5
50
Closing speed
Latching speed
364
107

Installation drawing

SR-EF in a wooden door

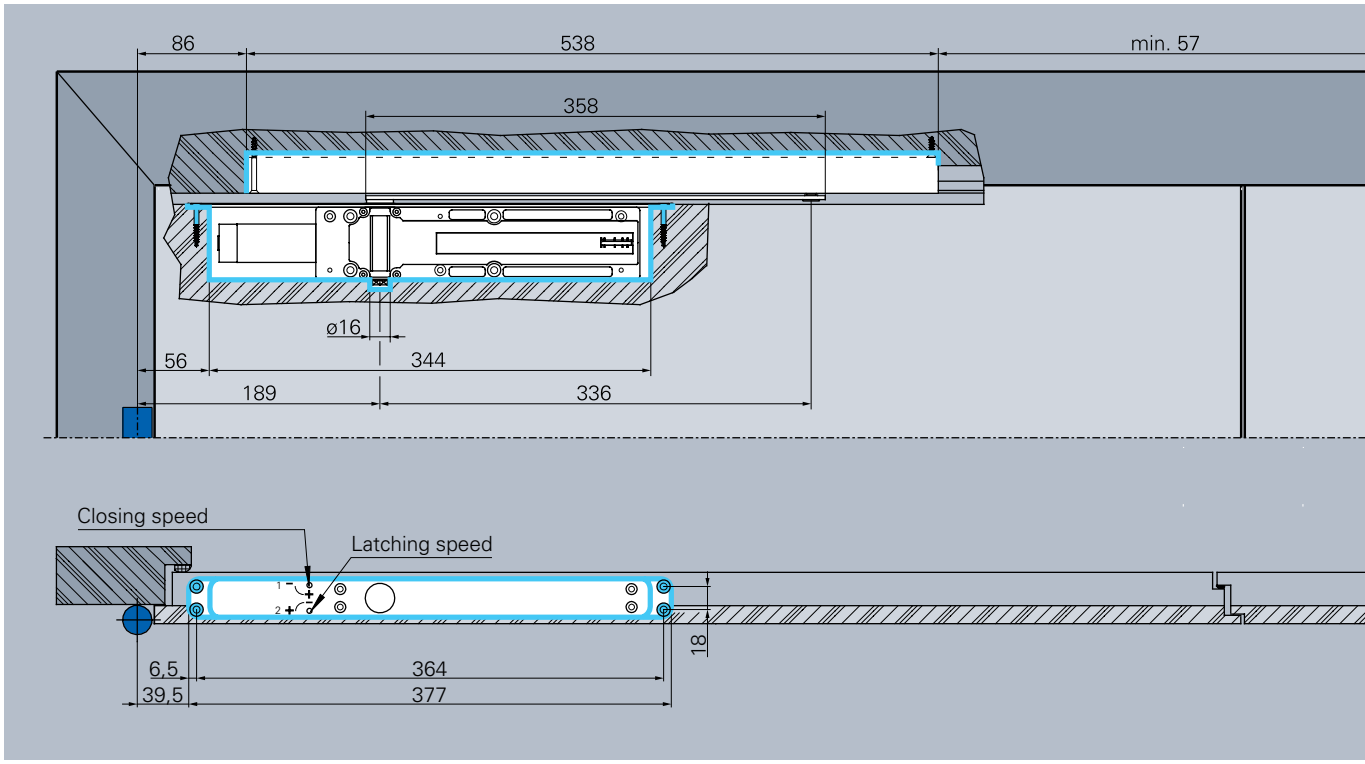

Installation Multi-Genius with slide rail 21,5 x 31 with SR-EF in a wooden door, illustration DIN left, DIN right laterally reversed

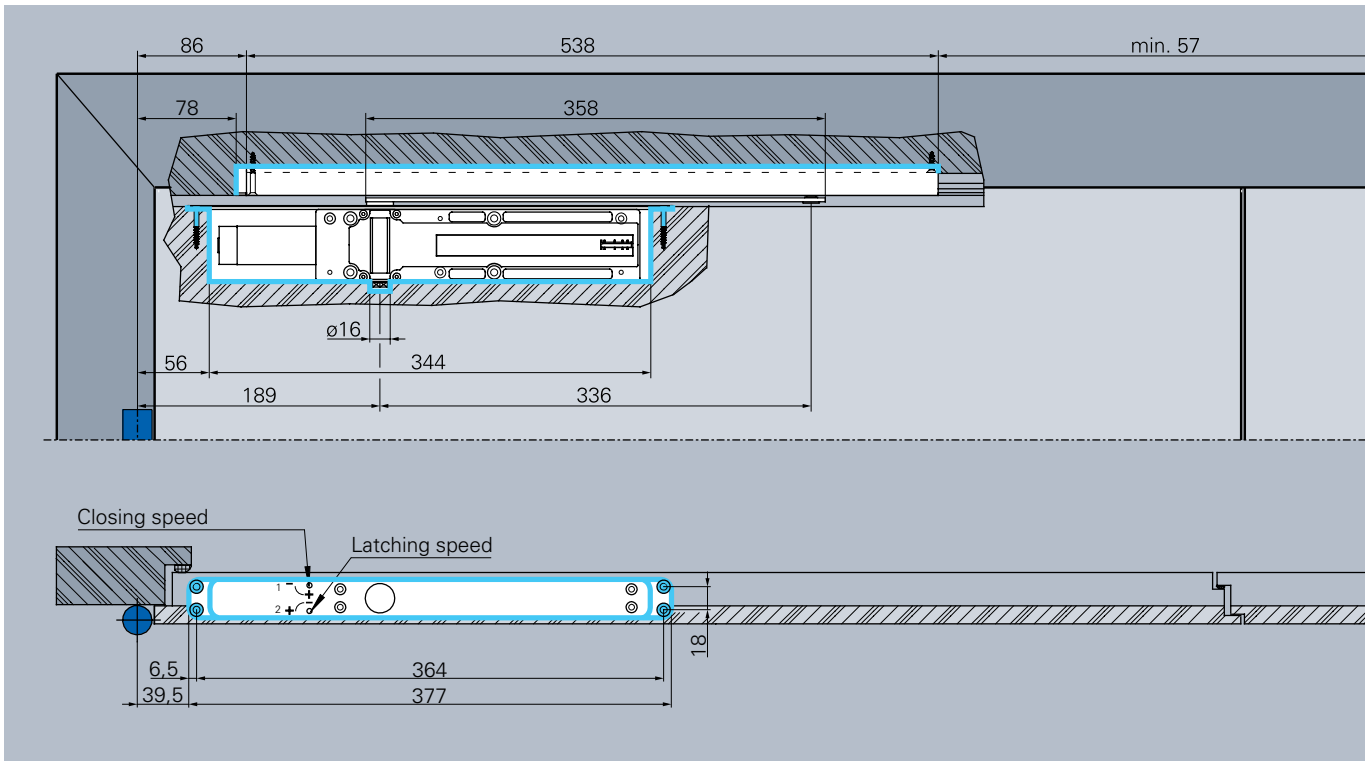

Installation Multi-Genius with slide rail 31 x 21 with SR-EF in a wooden door, illustration DIN left, DIN right laterally reversed

Swissdoor ApS • Stenhuggervej 2 • 5471 Søndersø • Danmark Telefon +45 86 28 00 00 • mail@swissdoor.dk • www.swissdoor.dk

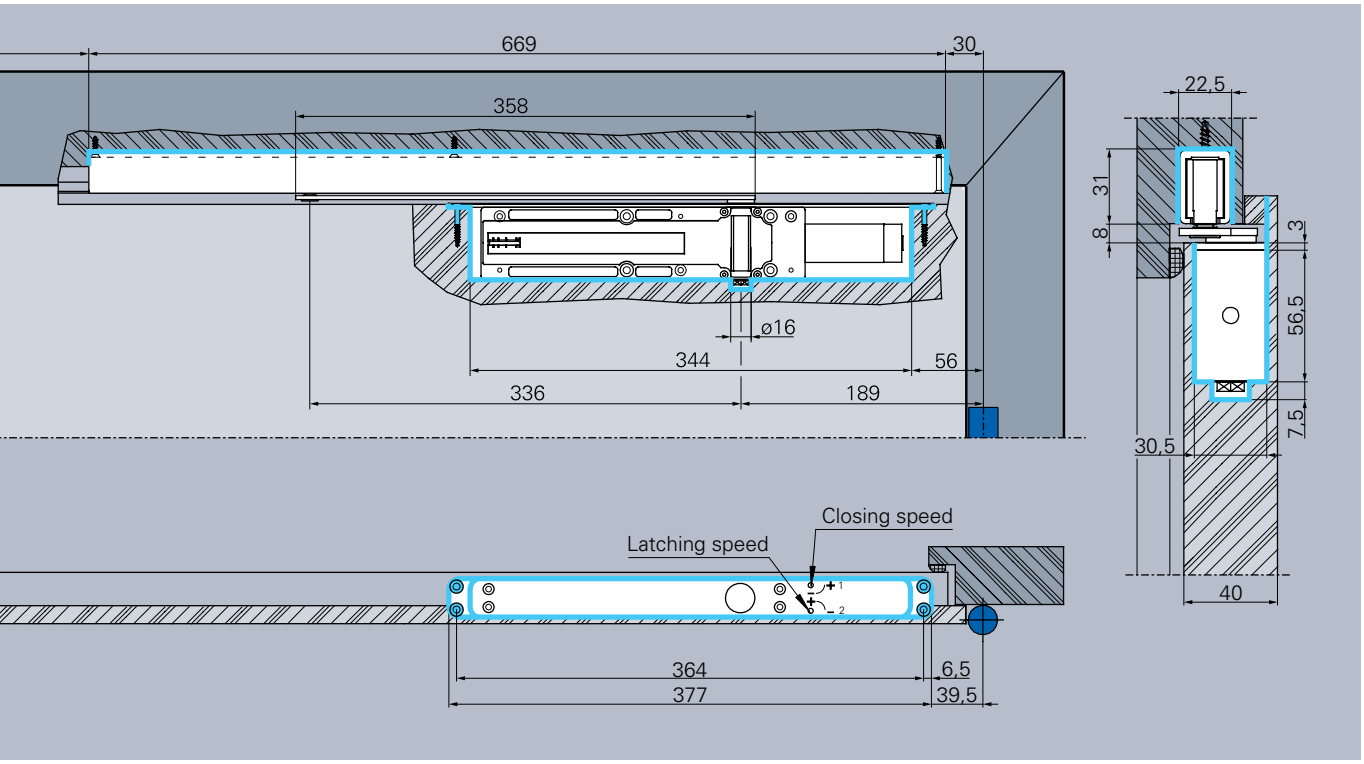
669
30
358
22,5
31
8
3
56,5
7,5
30,5
40
ø16
344
56
336
189
Closing speed
Latching speed
364
377
6,5
39,5

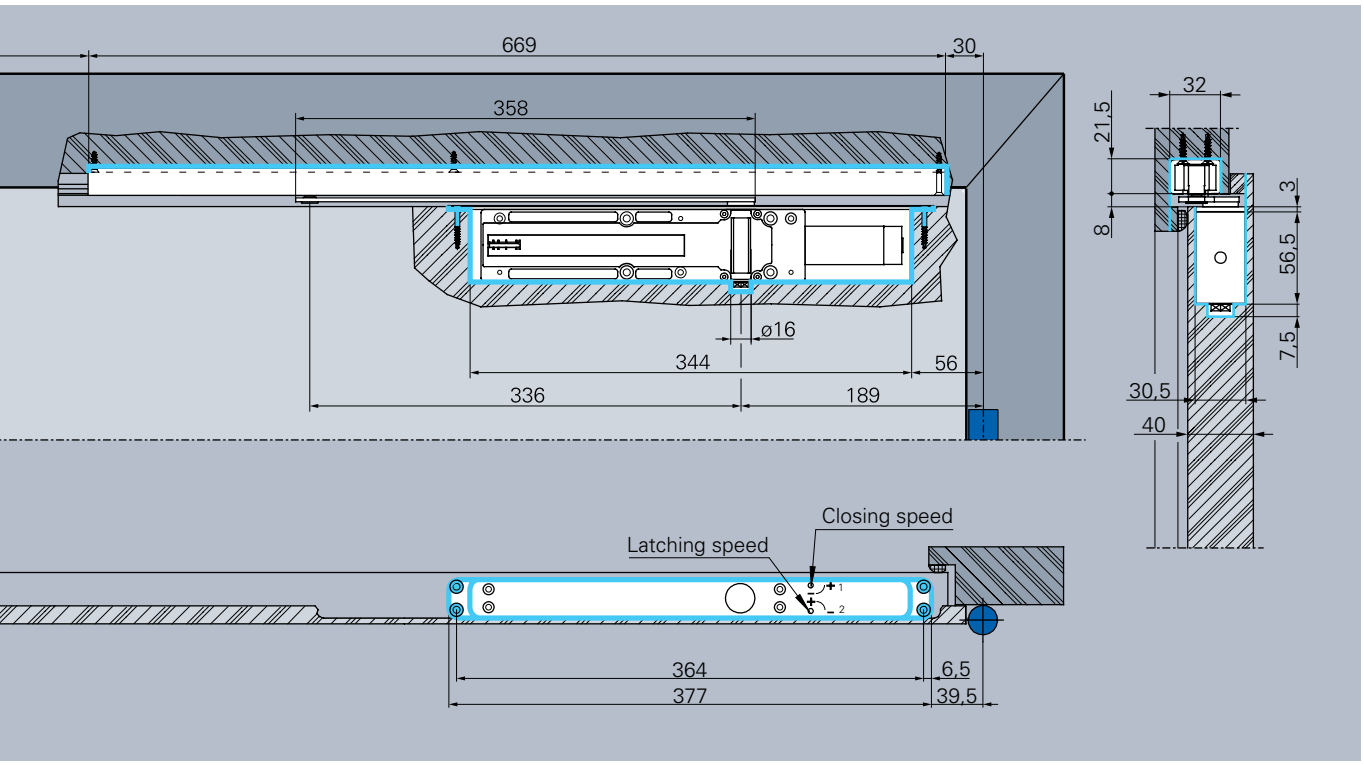
669
30
358
32
21,5
8
3
56,5
7,5
30,5
40
ø16
344
56
336
189
Closing speed
Latching speed
364
377
6,5
39,5

Installation drawing

SR-EF in a profile frame door

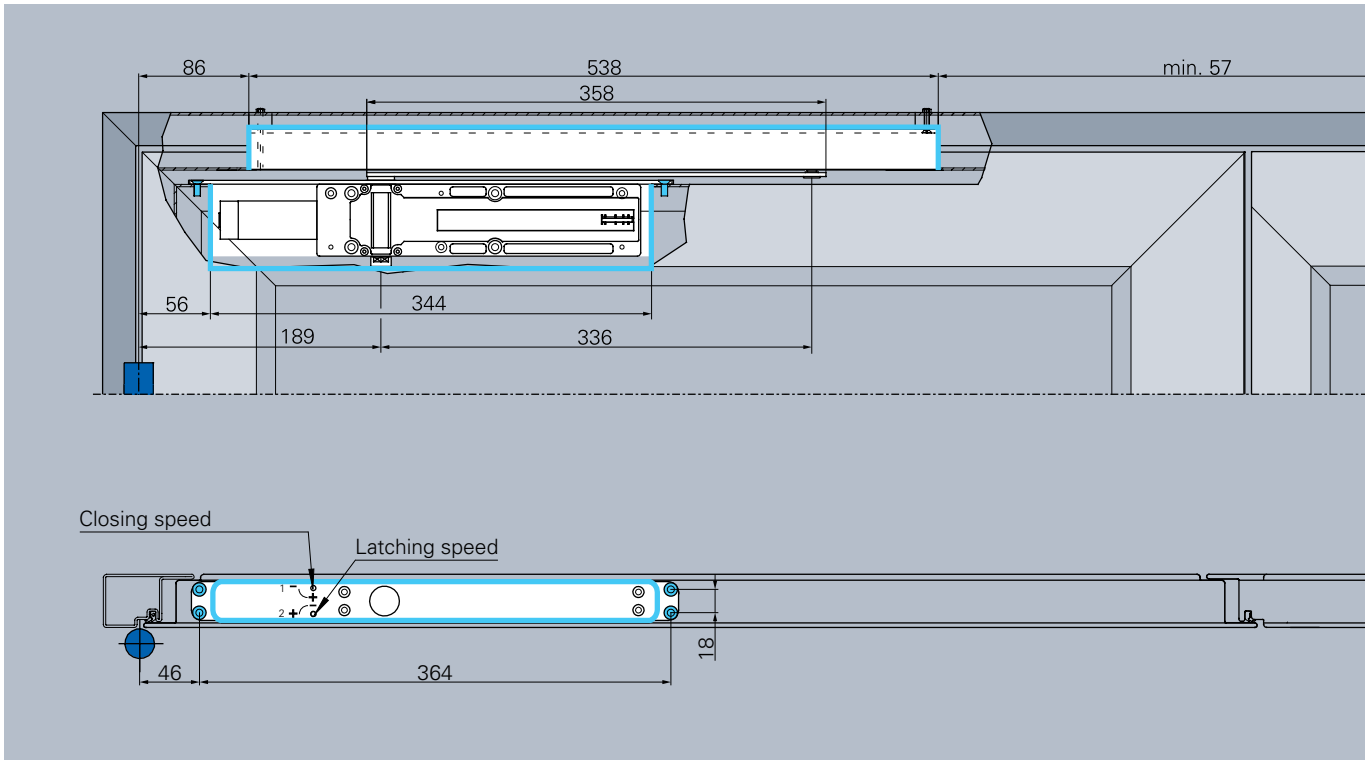

Installation Multi-Genius with slide rail 21,5 x 31 with SR-EF in a profile frame door, illustration DIN left, DIN right laterally reversed

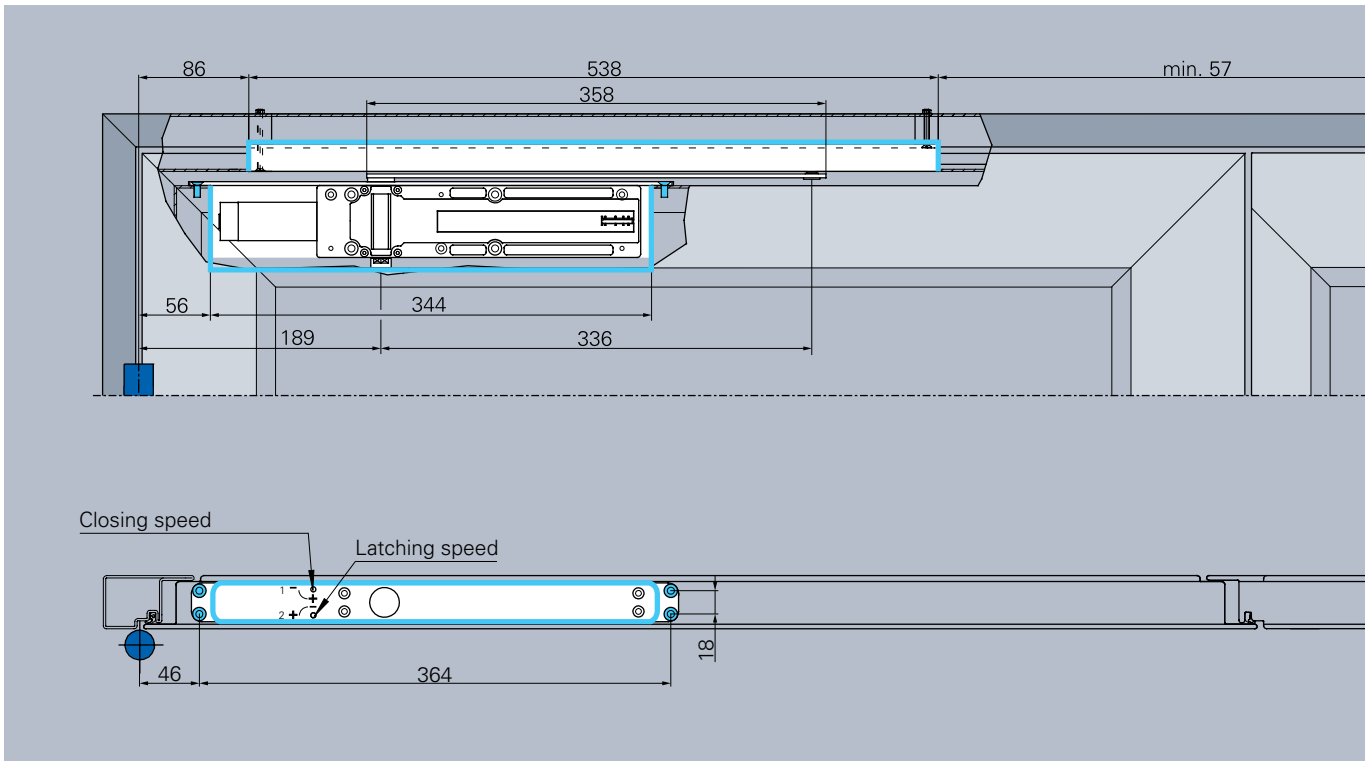

Installation Multi-Genius with slide rail 31 x 21 with SR-EF in a profile frame door, illustration DIN left, DIN right laterally reversed

Swissdoor ApS • Stenhuggervej 2 • 5471 Søndersø • Danmark Telefon +45 86 28 00 00 • mail@swissdoor.dk • www.swissdoor.dk

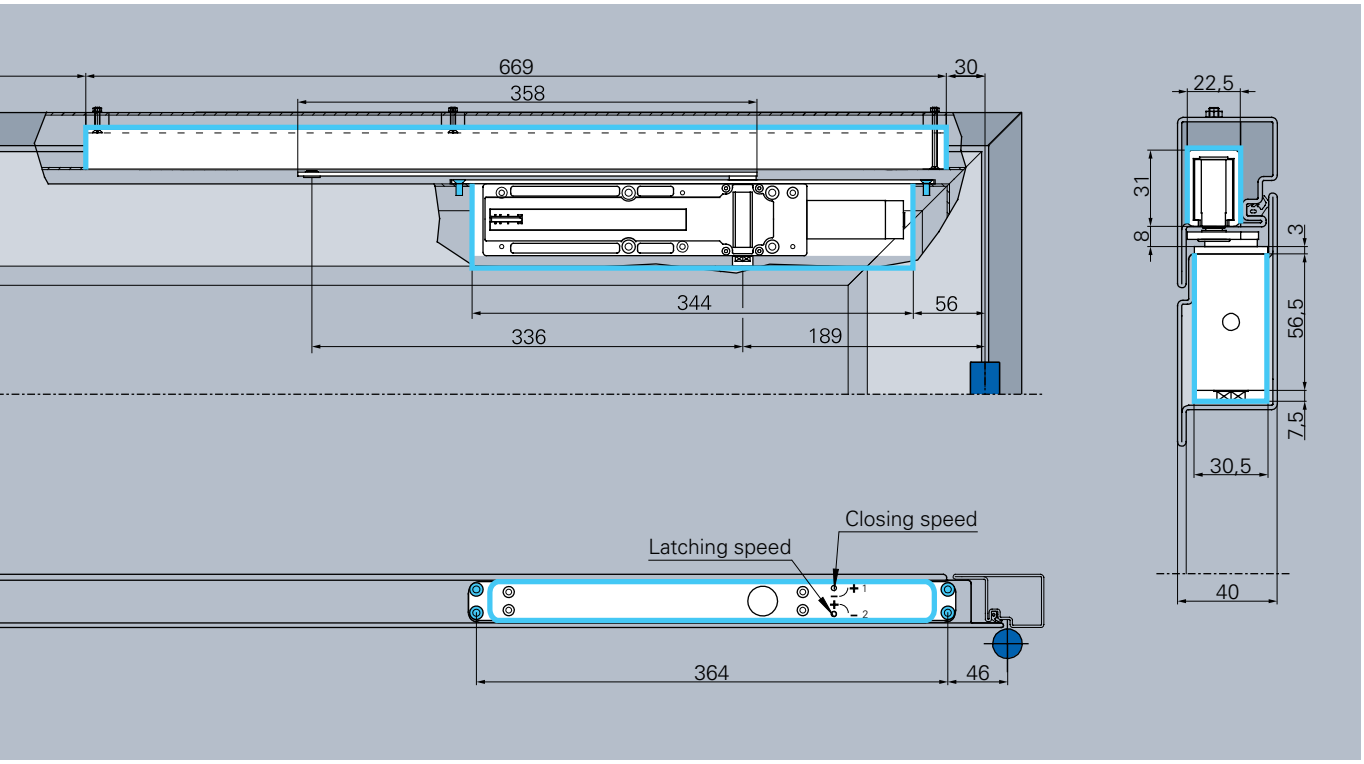
669
358
30
344
56
336
189
364
46
Latching speed
Closing speed
22,5
31
8
3
56,5
7,5
30,5
40

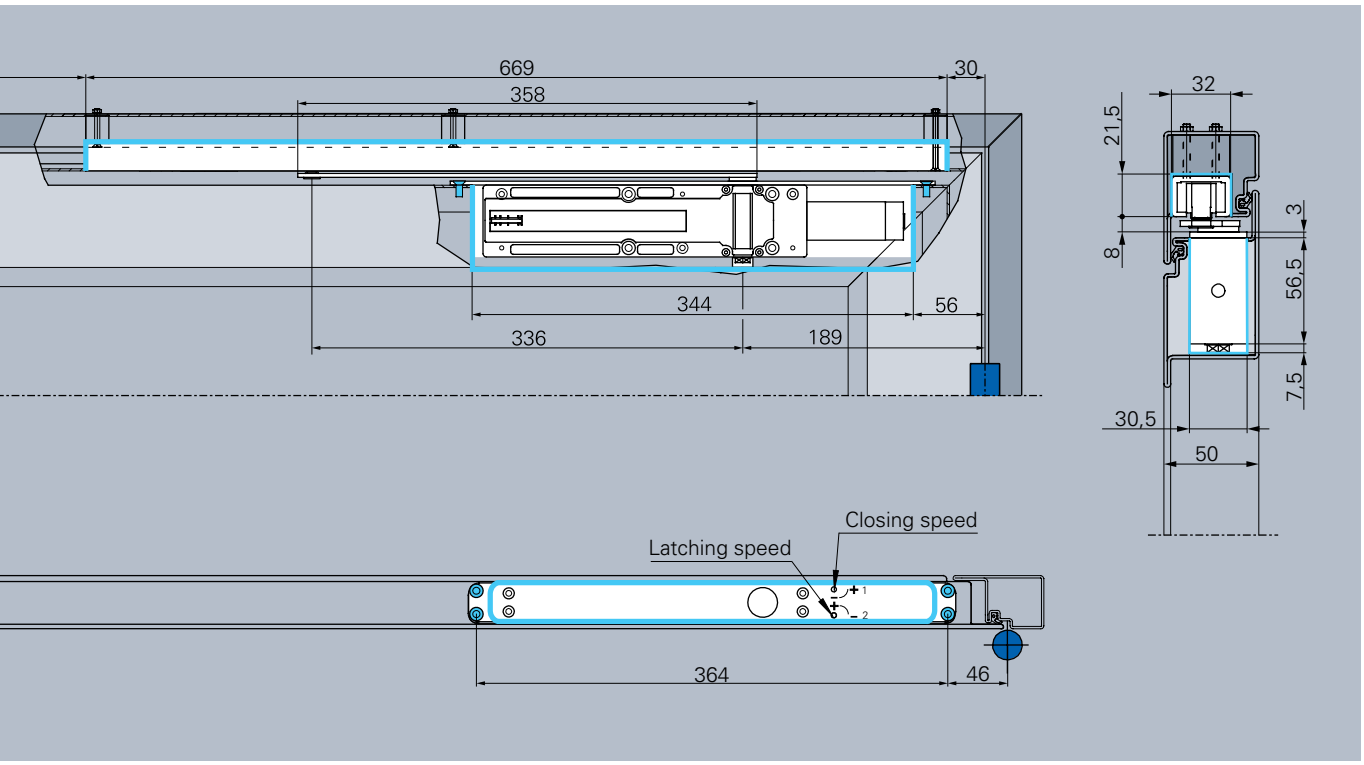
669
358
30
344
56
336
189
364
46
Latching speed
Closing speed
32
21,5
8
3
56,5
7,5
30,5
50

Installation drawing

SR-EF in a profile frame door with angle brackets

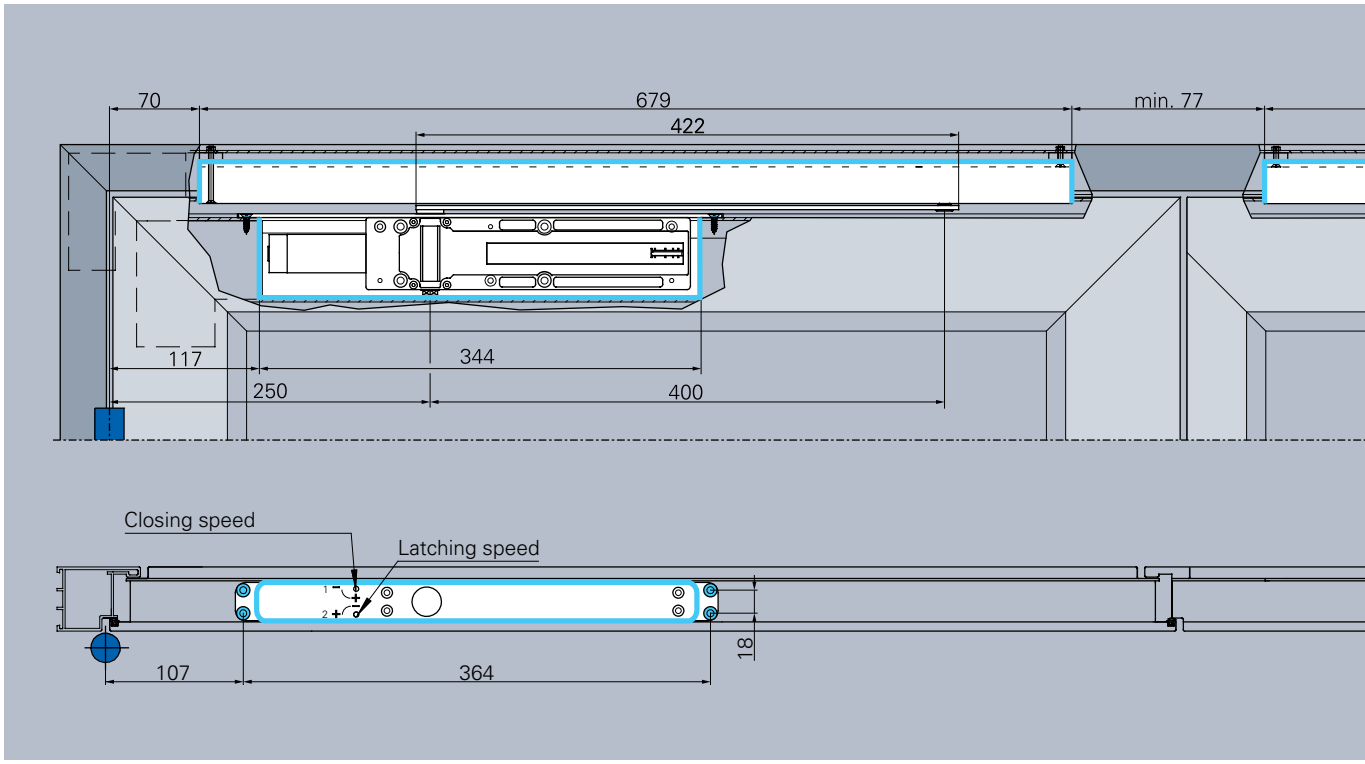

Installation Multi-Genius with slide rail 21,5 x 31 with SR-EF in a profile frame door with angle brackets, illustration DIN left, DIN right laterally reversed

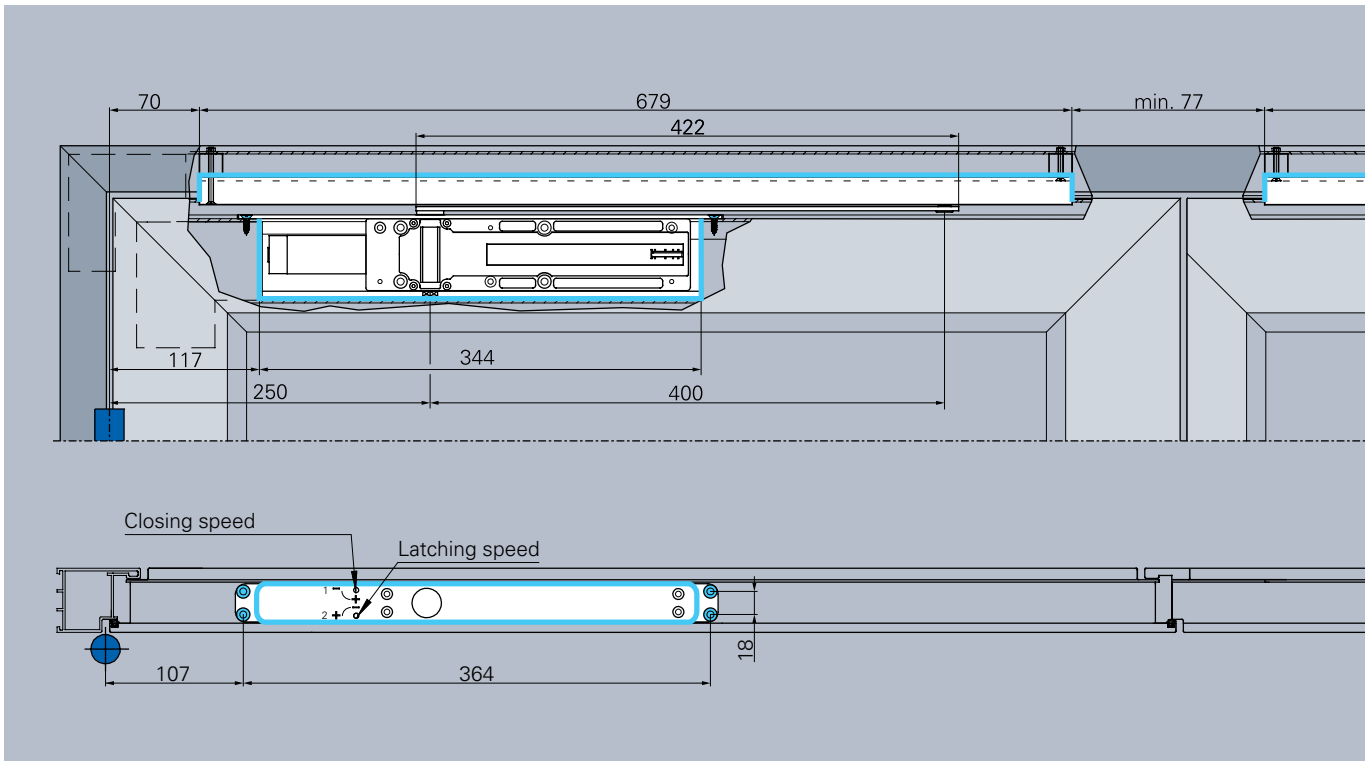

Installation Multi-Genius with slide rail 31 x 21 with SR-EF in a profile frame door with angle brackets, illustration DIN left, DIN right laterally reversed

Swissdoor ApS • Stenhuggervej 2 • 5471 Søndersø • Danmark Telefon +45 86 28 00 00 • mail@swissdoor.dk • www.swissdoor.dk

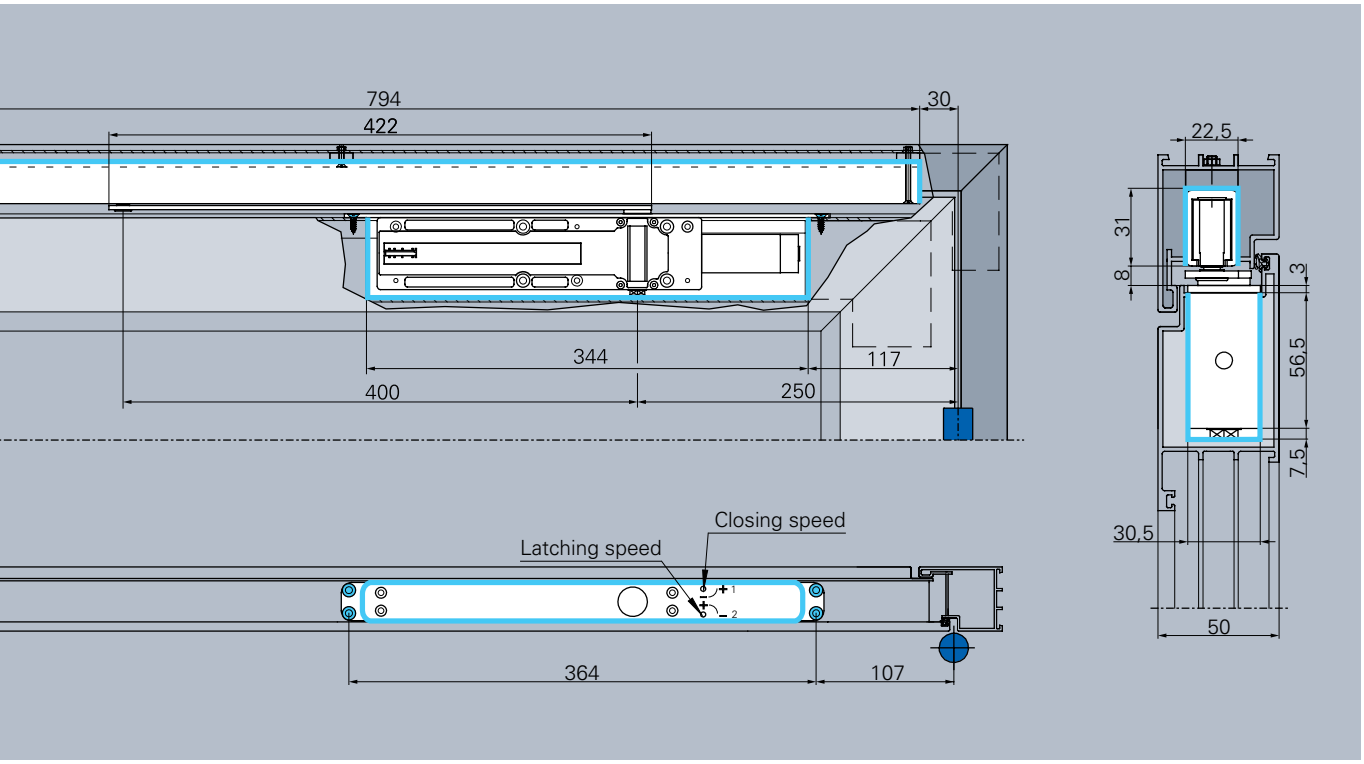
794
422
30
22,5
31
8
3
56,5
7,5
344
117
400
250
30,5
50
Closing speed
Latching speed
364
107

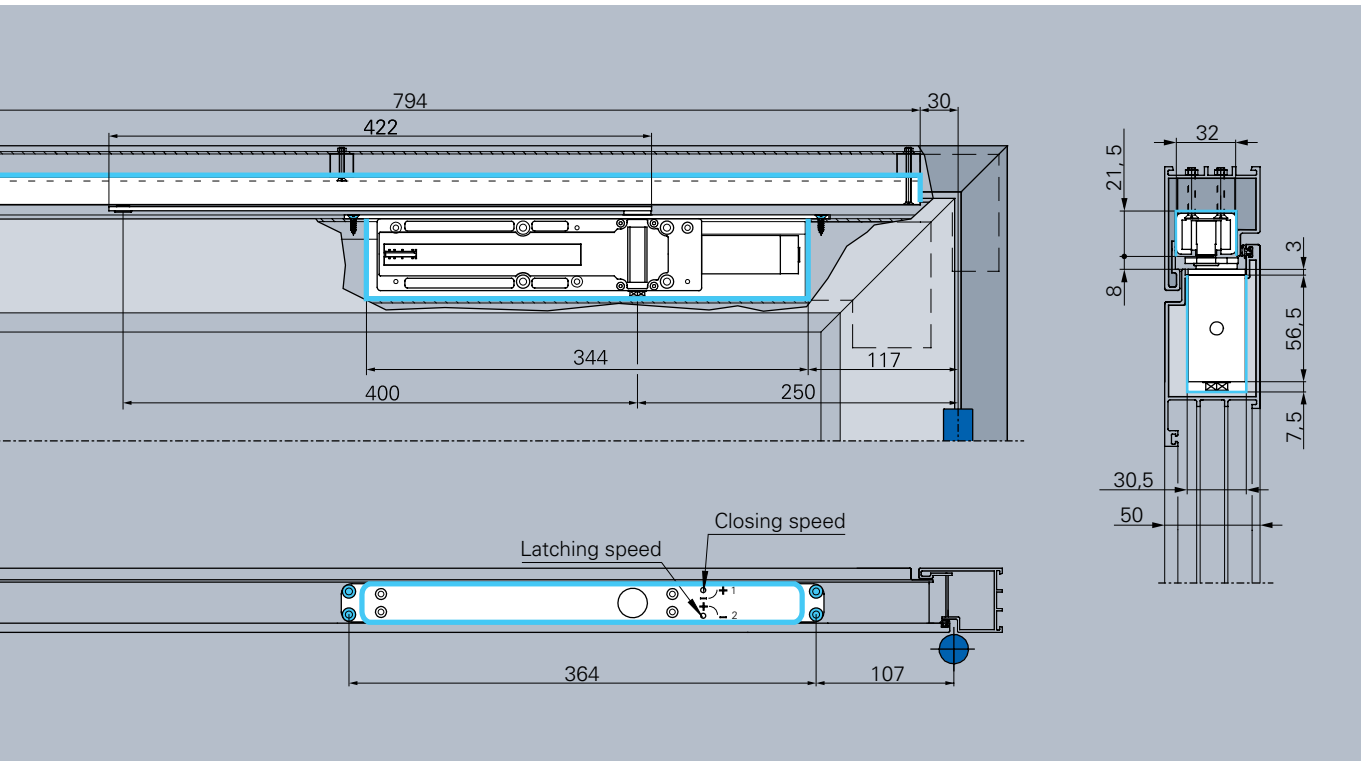
794
422
30
32
21,5
8
3
56,5
7,5
344
117
400
250
30,5
50
Closing speed
Latching speed
364
107

Hinge side

with slide rail B, illustration DIN left-door, DIN right laterally reversed

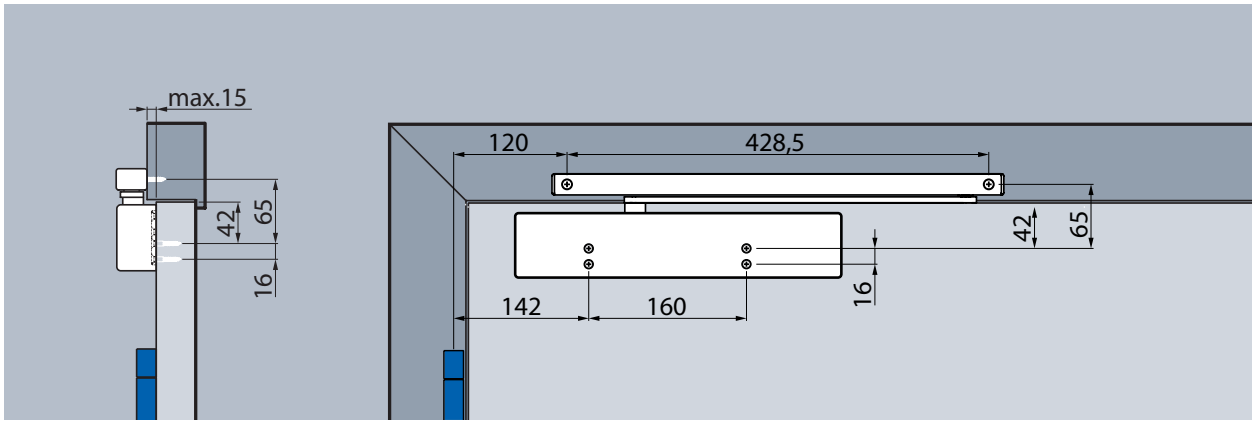

Standard mounting, hinge side

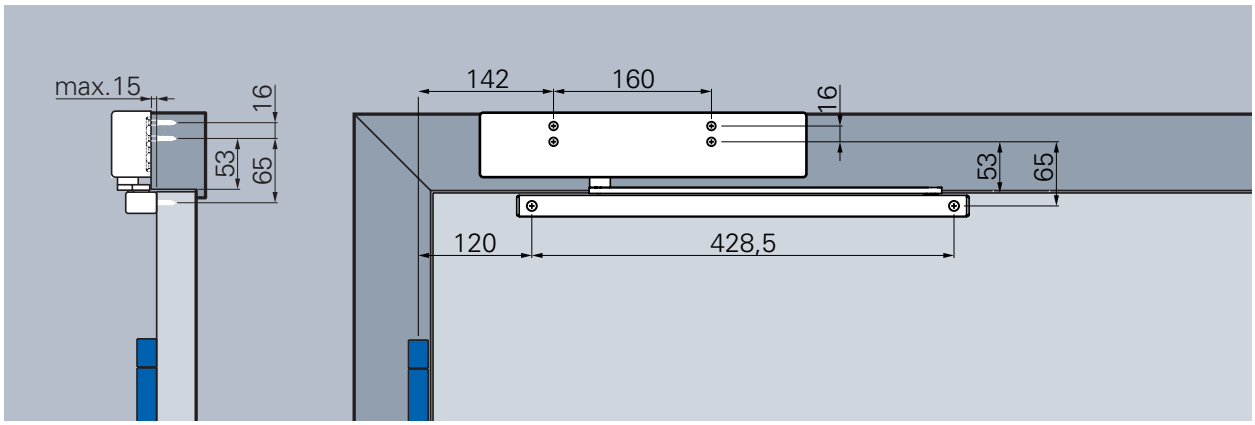

Head mounting, hinge side

Closing speed
Continuously adjustable closing speed from approx. 180° to 0°.

Latching speed
Increases the closing speed and thus the safe closing of the door, for example to overcome door seals, door locks and high air pressure.
Continously adjustable, works between 10 to 0°

Closing force diagram Multi-Genius, hinge side

Closing force:	
Continuously adjustable	min. size 1 max. size 4
or	
Continuously adjustable	min. size 2 max. size 5
Default delivery condition:	size 3

Swissdoor ApS • Stenhuggervej 2 • 5471 Søndersø • Danmark Telefon +45 86 28 00 00 • mail@swissdoor.dk • www.swissdoor.dk

Hinge-opposite side

with slide rail B, illustration DIN right-door, DIN right laterally reversed

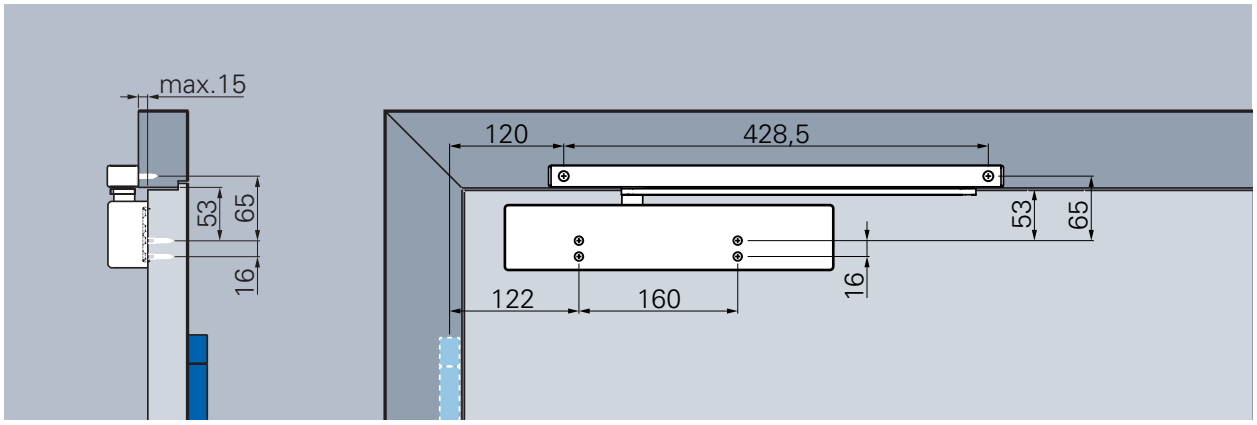

Standard mounting, hinge-opposite side

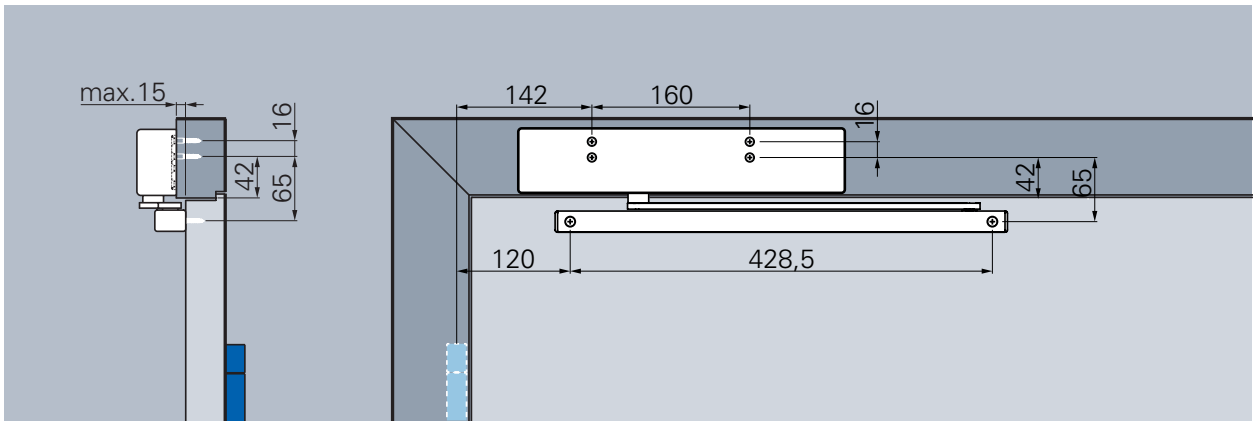

Head mounting, hinge-opposite side (not permitted for fire protection doors)

Closing speed
Continuously adjustable closing speed from approx. 140° to 0°.

Latching speed
Increases the closing speed and thus the safe closing of the door, for example to overcome door seals, door locks and high air pressure.
Continously adjustable, works between 10 to 0°

Closing force diagram Multi-Genius, hinge-opposite side

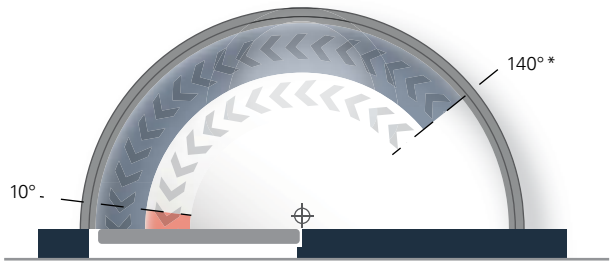

*Varies according to door thickness and type of hinge

A door stopper for opening limit is a must!

ECO Multi-Genius slide rails

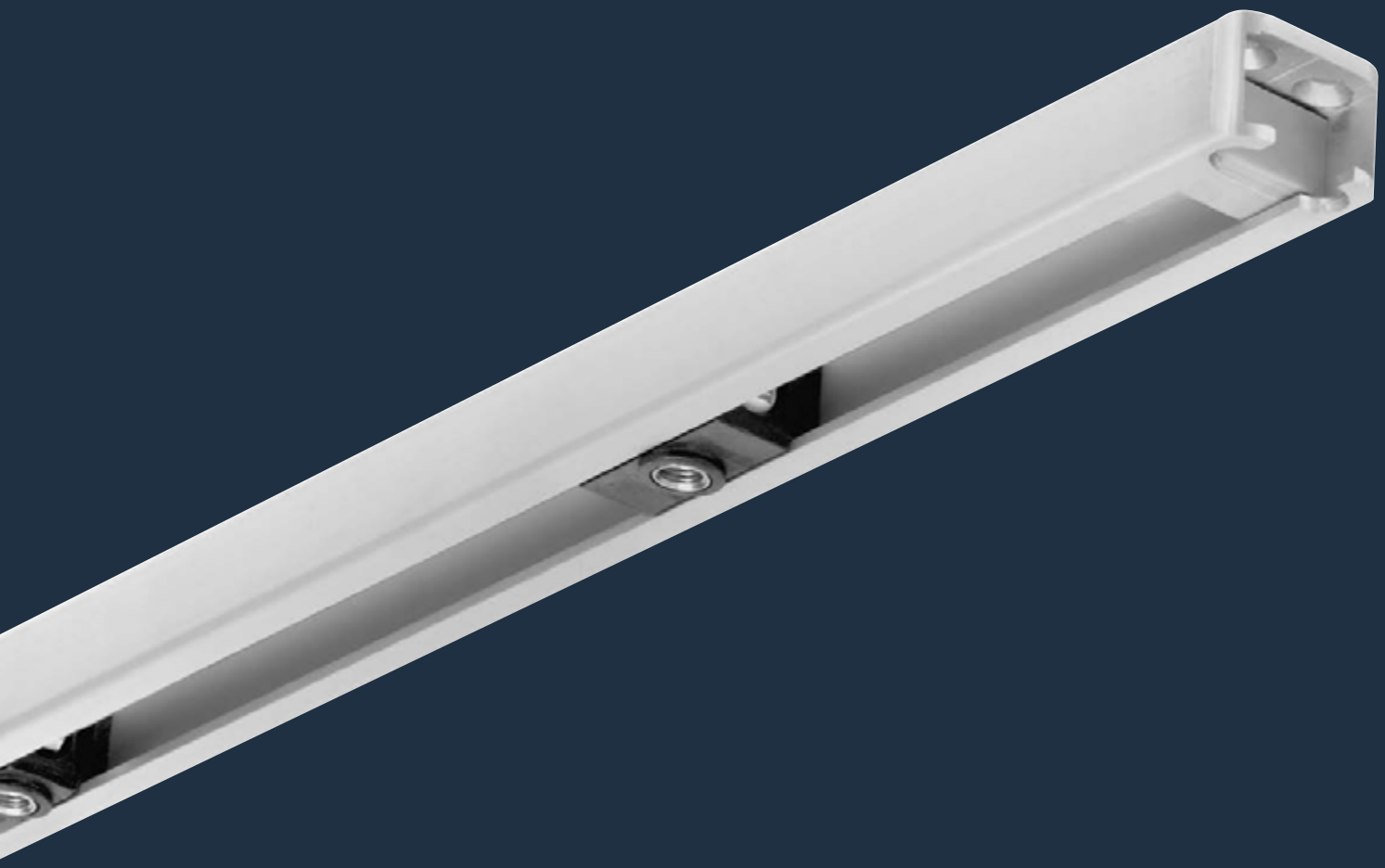

Swissdoor ApS • Stenhuggervej 2 • 5471 Søndersø • Danmark Telefon +45 86 28 00 00 • mail@swissdoor.dk • www.swissdoor.dk

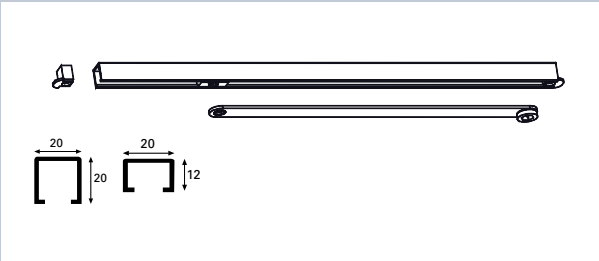

ITS

Slide rail ITS
for **ITS Multi-Genius** (concealed door closer)

Same version DIN left and DIN right. Slide rail available in 20 mm or 12 mm height.

Scope of delivery: slide rail ITS, arm, lock plate and fixing accessories.

Slide rail ITS is tested in combination with ITS Multi-Genius according to **EN 1154 A** for the use in fire- and smoke control doors.

Slide rail ITS	Profile	*Counter-flap length x	Article number
ITS 20 8/12	20 x 20 mm	8 - 12 mm	350100000O93000
ITS 20 12/16	20 x 20 mm	12 - 16 mm	350100000O93100
ITS 20 16/20	20 x 20 mm	16 - 20 mm	350100000O93200

Slide rail ITS	Profile	*Counter-flap length x	Article number
ITS 12 8/12	20 x 12 mm	8 - 12 mm	350100000O92000
ITS 12 12/16	20 x 12 mm	12 - 16 mm	350100000O92100
ITS 12 16/20	20 x 12 mm	16 - 20 mm	350100000O92200

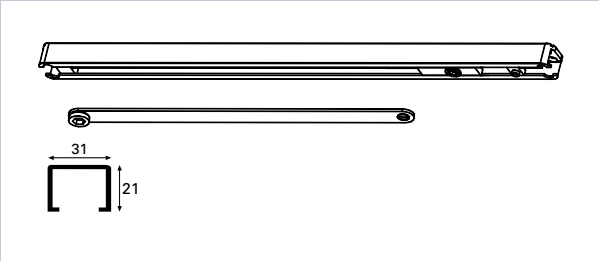

Mounting slide rail ITS-MFA

ITS-MFA

Slide rail ITS with mechanic hold-open of the door
for **ITS Multi-Genius** (concealed door closer)

Hold-open can be switched off manually from 70° to 150°. Same version DIN left and DIN right

Scope of delivery: slide rail ITS-MFA, arm, lock plate and fixing accessories.

Not approved for fire- and smoke control doors.

Slide rail MFA	Profile	*Counter-flap length x	Article number
ITS MFA 8/12	31 x 21 mm	8 - 12 mm	350100000O94000
ITS MFA 12/16	31 x 21 mm	12 - 16 mm	350100000O94100
ITS MFA 16/20	31 x 21 mm	16 - 20 mm	350100000O94200

*Please mention the correct counterflap length when ordering
See related information on page 140.

Slide rails for single-leaf doors (concealed mounted)

EN 1155 F CE

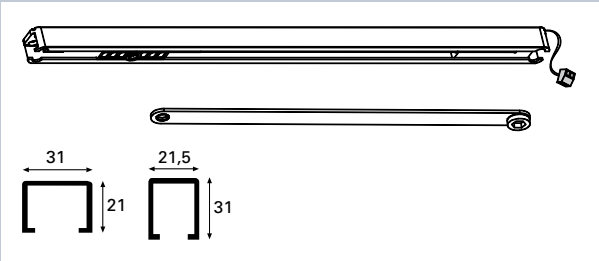

Mounting slide rail ITS-EF

ITS-EF

Slide rail ITS with electromagnetic hold-open
for **ITS Multi-Genius** (concealed door closer)

The electromagnetic hold-open is adjustable from 70° to 120°. In case of fire, this hold-open is released and the closing of the door by the door closer is triggered. The hold-open is controlled by an external fire alarm unit or a smoke switch.

Input power 24 V DC, maximum 1,8 W. Same version DIN left and DIN right.

Scope of delivery: slide rail ITS-EF, arm, lock plate and fixing accessories.

The slide rail ITS-EF is tested in combination with ITS MULTI-GENIUS according to **EN 1155** for the use in fire- and smoke control doors. Approved by DIBt.

Slide rail **ITS**	Profile	*Counter-flap length x	Article number	Slide rail **ITS**	Profile	*Counter-flap length x	Article number
ITS 31 8/12	31 x 21 mm	8 - 12 mm	350100000O97001	**ITS 21,5 8/12**	21,5 x 31 mm	8 - 12 mm	350100000O97001
ITS 31 12/16	31 x 21 mm	12 - 16 mm	350100000O97101	**ITS 21,5 12/16**	21,5 x 31 mm	12 - 16 mm	350100000O97101
ITS 31 16/20	31 x 21 mm	16 - 20 mm	350100000O97201	**ITS 21,5 16/20**	21,5 x 31 mm	16 - 20 mm	350100000O97201

*Please mention the correct counterflap length when ordering
See related information on page 140.

Swissdoor ApS • Stenhuggervej 2 • 5471 Søndersø • Danmark Telefon +45 86 28 00 00 • mail@swissdoor.dk • www.swissdoor.dk

Slide rails for double-leaf doors (concealed mounted)

EN 1155 EN 1158 F CE

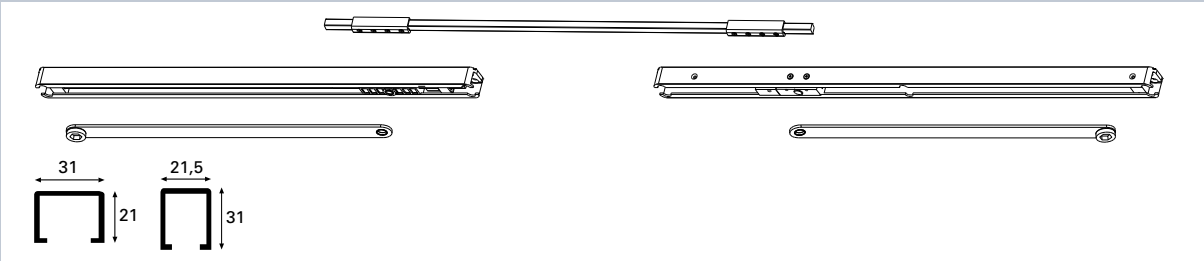

ITS-SR

Slide rail-Closing sequence selector
for **ITS Multi-Genius** (concealed door closer)

The closing sequence selector ensures that the door leafs are closing in the correct order. E.g.: the passive leaf first, active leaf last.

When opening the passive leaf, sliding shoes inside the active-leaf slide rail make sure that the active leaf stops as soon as the passive leaf opens.

Scope of delivery: closing sequence selector ITS-SR, 2 x arm, 2 x lock plate and fixing accessories.

The slide rail ITS-SR is tested in combination with ITS MULTI-GENIUS according to **EN 1158** for the use in fire- and smoke control doors. Approved by DIBt.

Slide rail **ITS**	Profile	*Counter-flap length x	Article number	Slide rail **ITS**	Profile	*Counter-flap length x	Article number
ITS SR 31 8/12	31 x 21 mm	8 - 12 mm	35M200000AK1401	**ITS SR 21,5 8/12**	21,5 x 31 mm	8 - 12 mm	35M210000AK1401
ITS SR 31 12/16	31 x 21 mm	12 - 16 mm	35M200000AK1402	**ITS SR 21,5 12/16**	21,5 x 31 mm	12 - 16 mm	35M210000AK1402
ITS SR 31 16/20	31 x 21 mm	16 - 20 mm	35M200000AK1403	**ITS SR 21,5 16/20**	21,5 x 31 mm	16 - 20 mm	35M210000AK1403

EN 1155
EN 1158
F
CE

ITS-SR-EF

Slide rail closing sequence selector with electromagnetic hold-open in door leaf
for **ITS Multi-Genius** (concealed door closer)

The closing sequence selector ensures that the door leafs are closing in the correct order. E.g.: the passive leaf first, active leaf last.

Electromagnetic hold-open adjustable from 70° to 120°. Hold-open in passive leaf ITS-SR-EF-1S, hold-open in active leaf via SR. In case of fire, this hold-open is released and the closing of the door by the door closer is triggered. The hold-open is controlled by an external fire alarm unit or a smoke switch.

Scope of delivery: closing sequence selector ITS-SR-EF, 2 x arm, 2 x lock plate and fixing accessories.

Input power 24 V DC, maximum 1,8 W. Same version DIN left and DIN right.

The slide rail ITS-SR is tested in combination with ITS MULTI-GENIUS according to **EN 1155** and **EN 1158** for the use in fire- and smoke control doors. Approved by DIBt.

Slide rail **ITS**	Profile	*Counter-flap length x	Article number	Slide rail **ITS**	Profile	*Counter-flap length x	Article number
ITS 31 8/12	31 x 21 mm	8 - 12 mm	35M200000AK3401	**ITS 21,5 8/12**	21,5 x 31 mm	8 - 12 mm	35M210000AK3201
ITS 31 12/16	31 x 21 mm	12 - 16 mm	35M200000AK3402	**ITS 21,5 12/16**	21,5 x 31 mm	12 - 16 mm	35M210000AK3202
ITS 31 16/20	31 x 21 mm	16 - 20 mm	35M200000AK3403	**ITS 21,5 16/20**	21,5 x 31 mm	16 - 20 mm	35M210000AK3203

*Please mention the correct counterflap length when ordering
See related information on page 140.

Rebate space measurements

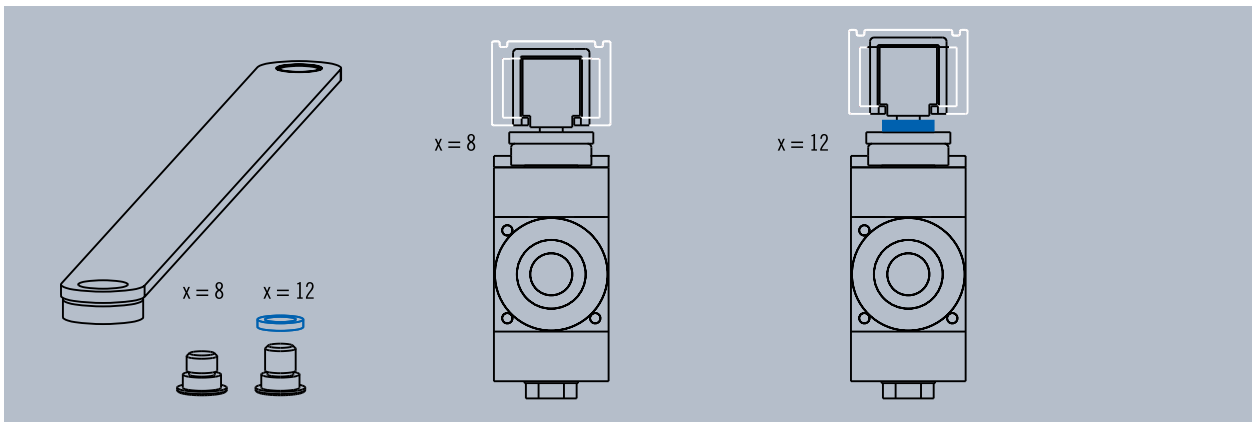

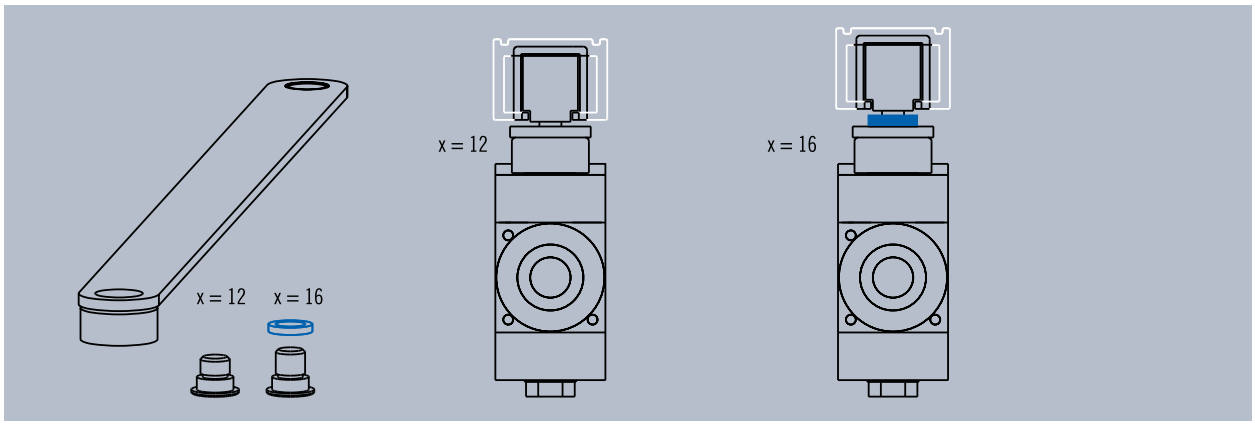

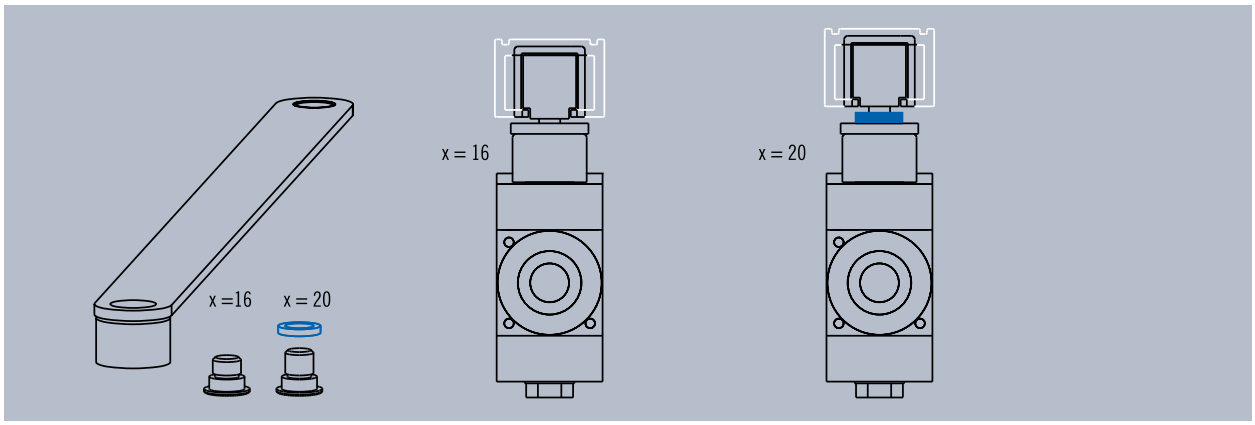

The integrated ITS Multi-Genius door closer system can be used in different door profiles with different rebate space measurements. This is enabled by different counterflap lengths (x) on the arm.

Please mention the correct counterflap length when ordering slide rails for Multi-Genius.

Swissdoor ApS • Stenhuggervej 2 • 5471 Søndersø • Danmark Telefon +45 86 28 00 00 • mail@swissdoor.dk • www.swissdoor.dk

Milleniumtower, Vienna, Austria

ECO **Schulte**
Worldwide trust.

Whether under our own trademark or as an OEM partner product of renowned door manufacturers, solutions from ECO Schulte make doors functional all over the world. Where there's a door, ECO Schulte is not far away.

All over the planet, builders and investors are realizing demanding projects together with architects and planners. Clever solutions for doors are always in demand. Our philosophy of system security and reliability in the door is to be found just as much in contemporary architecture as in impressive hotels, public buildings, private residences, royal castles, private apartments and stadia.

Swissdoor ApS • Stenhuggervej 2 • 5471 Søndersø • Danmark Telefon +45 86 28 00 00 • mail@swissdoor.dk • www.swissdoor.dk

ECO FTS-63 / R

SWiSSDOOR
DØRTEKNIK FOR PROFESSIONELLE

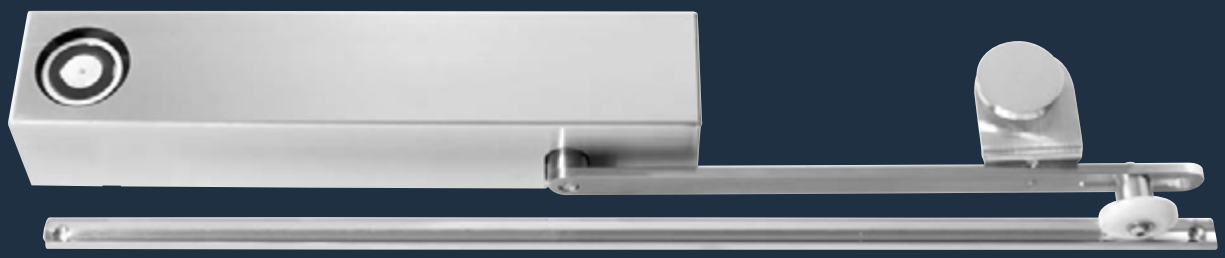

FTS-63 / R

EN 1155 F CE

ECO

Product characteristics		FTS 63	FTS 63-R
Closing force (continuously adjustable)	Size acc. to EN	2 – 5 (2 – 6)	2 – 5 (2 – 6)
Door width acc. to EN	≤ 1.250 mm	■	■
	≤ 1.400 mm	◘	◘
Dimensions (incl. mounting plate)	Length in mm Depth in mm Height in mm	372 62 72	507 62 77
DIN left / right (please order corresponding execution)		■	■
Latching speed (continuously adjustable)		■	■
Back-check (continuously adjustable)		■	■
Closing speed (continuously adjustable)		■	■
Door opening angle	Standard With special arm	85° – 115°* 115° – 155°*	
Tested acc. to EN		EN 1155	
Suitable for fire- and smoke control doors		F	
Certified according to EU-Directive		CE	

■ Yes
- No
◘ Option

*depending on door construction

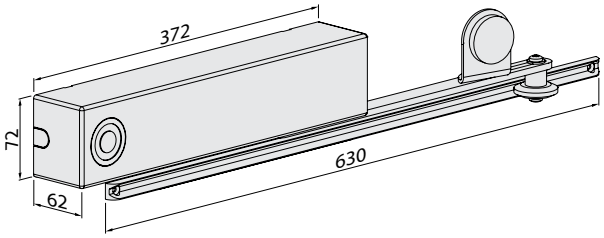

Dimensions: FTS-63

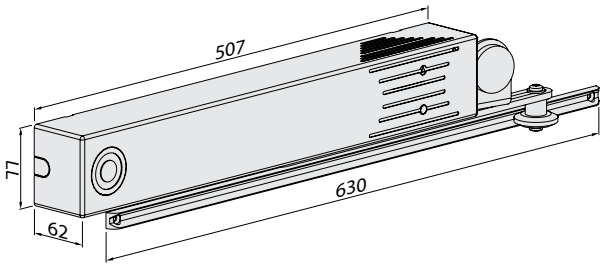

Dimensions: FTS-63 R

ECO FTS-63 / R ▪ … for special applications

With the FTS-63 / R hold-open door closer, ECO Schulte has developed a product for use in special-purpose buildings. Accordingly, the hold-open door closer is used mainly in retirement homes, kindergartens, schools, hospitals and other buildings in which doors have to be opened and closed with as little force as possible.

The FTS-63 / R is designed in such a way that an electromagnet holds the lever arm of the door closer in the open position. This means that the door is separated from the hold-open system, thus guaranteeing the free-running function. In combination with a separate and/or integrated smoke switching system, the magnet is deactivated either automatically or by means of a manual switch when smoke is detected, so that the door closer can assume its normal function and the lever arm closes the door.

FTS-63 / R is available in size 2 - 5 and 2 - 6 (tested acc. to **EN 1155**) for doors with max. 1.400 mm width.

According to the DIBt (German Construction Technology Institute) guidelines for hold-open systems for fire-retarding and smoke protection doors, a red manual switch with the inscription "Close Door" must be installed in a clearly visible, easily accessible place in their immediate proximity. More information on page 179.

Mounting

illustration DIN left-door, DIN right laterally reversed

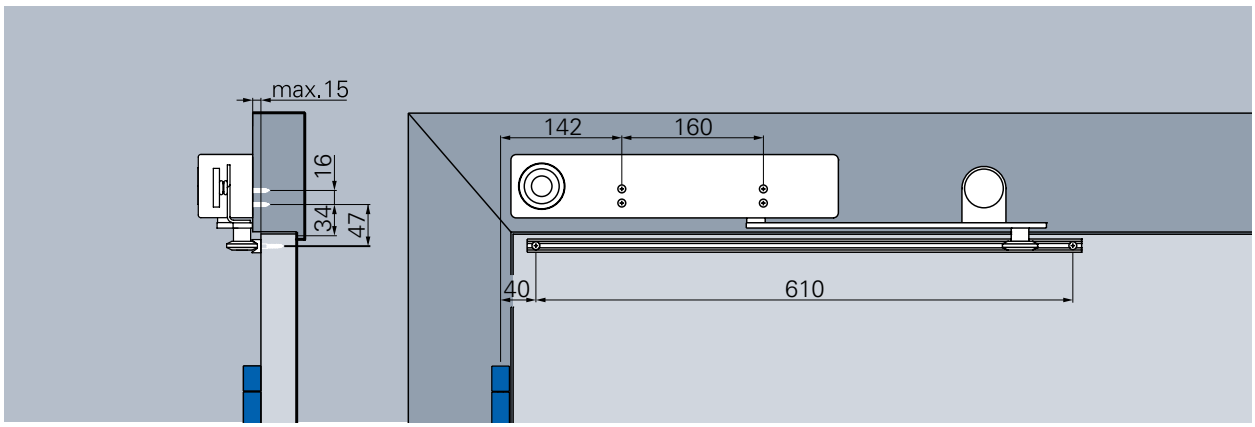

Standard mounting, hinge side – FTS-63

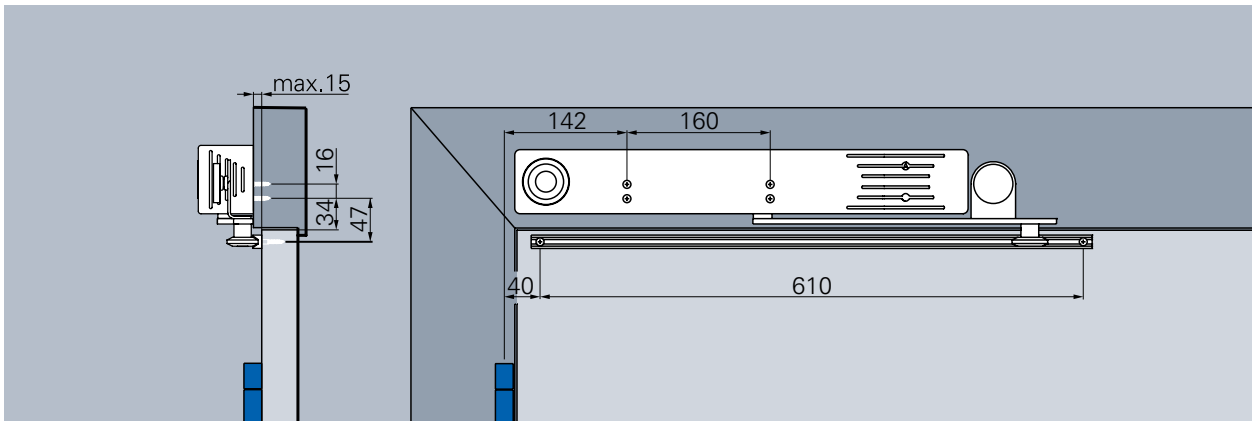

Standard mounting, hinge side – FTS-63 R

Closing speed
Continuously adjustable closing speed from 115° to 0°.

Latching speed
Increases the closing speed and thus the safe closing of the door, for example to overcome door seals, door locks and high air pressure.
Continously adjustable, works between 10 to 0°

Back-check
Reduces the opening speed starting at 70° and avoids the slamming of the door.
Back-check fixed

Closing force diagram FTS, hinge side

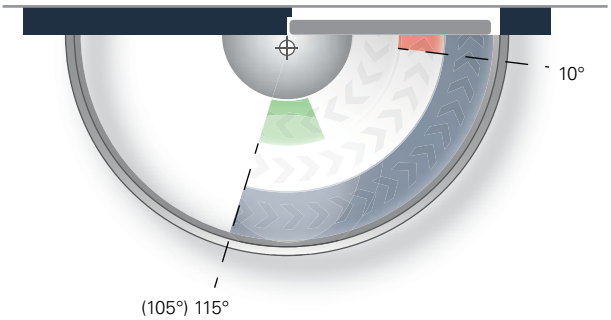

Closing force:	
Continuously adjustable	min. size 2 max. size 5
or	
Continuously adjustable	min. size 2 max. size 6
Default delivery condition:	size 3

The free-swinging function de-activates closing force, closing speed, back-check and latching speed

Swissdoor ApS • Stenhuggervej 2 • 5471 Søndersø • Danmark Telefon +45 86 28 00 00 • mail@swissdoor.dk • www.swissdoor.dk

Order information

ECO FTS-63 / -63 R ▪ Product description

Door closer with free-swinging function ECO FTS 63

- The free-swinging function is activated by locking the arm when opening once
- Opening angle, depending on notch of the door: 85° - 115° (115° - 155° on request)
- External power supply 24 V DC, in order to connect to an external smoke detector
- Closing force, closing speed and latching speed continously adjustable
- Head-mounting on pull side, slide rail on door leaf (optional)
- Adaptor profiles for special structural conditions available

Door closer with free-swinging function ECO FTS 63 R

- The free-swinging function is activated by locking the arm when opening once
- Integrated smoke detector
- Opening angle, depending on notch of the door: 85° - 115° (115° - 155° on request)
- Power supply 230 V AC
- Closing force, closing speed and latching speed continously adjustable
- Head-mounting on pull side, guiding rail on door leaf
- Adaptor profiles for special structural conditions available

According to the rules for hold-open devices of the DBIt, an interrupt button stating „Close door" (red) has to be placed nearby, visible and freely accessible when using the free-swinging door closer. For further information, please refer to page 179.

FTS-63 / R

Door closer without smoke switch	Colour	DIN	Article number	Door closer without smoke switch	Colour	DIN	Article number
FTS-63 (2-5)	Stainless steel satin	DIN L	306113AB5Q05001	FTS-63 (2-6)	Stainless steel satin	DIN L	306113CB5Q05001
FTS-63 (2-5)	Stainless steel satin	DIN R	306113AB5Q06001	FTS-63 (2-6)	Stainless steel satin	DIN R	306113CB5Q06001

Door closer with smoke switch	Colour	DIN	Article number	Door closer with smoke switch	Colour	DIN	Article number
FTS-63 R (2-5)	Stainless steel satin	DIN L	306113AB5Q05011	FTS-63 R (2-6)	Stainless steel satin	DIN L	306113CB5Q05011
FTS-63 R (2-5)	Stainless steel satin	DIN R	306113AB5Q05012	FTS-63 R (2-6)	Stainless steel satin	DIN R	306113CB5Q05012

ECO BTS

SWISSDOOR
DØRTEKNIK FOR PROFESSIONELLE

Swissdoor ApS • Stenhuggervej 2 • 5471 Søndersø • Danmark Telefon +45 86 28 00 00 • mail@swissdoor.dk • www.swissdoor.dk

Product characteristics

Closing force (with closing force display, continuously adjustable)	Size acc. to EN	3	4
Door width	≤ 950 mm	■	■
acc. to EN	≤ 1100 mm	-	■
Door weight acc. to EN	max. in kg	105	150
Dimensions (incl. mounting plate)	Length in mm Depth in mm Height in mm	306 108 40	306 108 40
Latching speed (adjustable)		■	■
Back-check (adjustable)		◘	◘
Closing speed (adjustable)		■	■
Hold open 90° or 105° Not fire proved (continuously adjustable)		◘	◘
DIN left / right		■	■
Door opening angle		130°	
Tested acc. to EN		EN 1154 A	
Suitable for fire- and smoke control doors (no permission when using with hold-open)		F	
Certified according to EU-Directive		CE	

■ Yes
- No
◘ Option

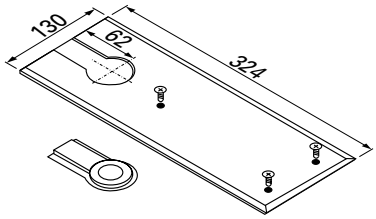

Dimensions: Cover

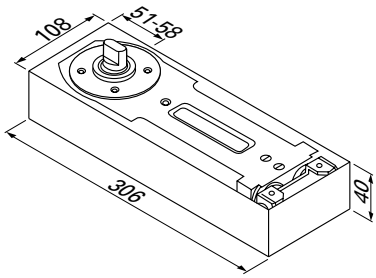

Dimensions: Cement case

ECO BTS ▪ … flattens itself!

The BTS-FH floor door closer is distinguished by its particularly flat design which makes it the ideal door closer for single-leaf latching and swinging doors. The overall height of only 40 mm enables easy installation.

The BTS-FH is available in size 3 and size 4. It is tested acc. to **EN 1154 A** and therefore meets all requirements.

For the use on solid glass doors you need the respective fittings. You can get more information in the chapter "Glass door fittings".

Installation drawing

illustration DIN left-door, DIN right laterally reversed

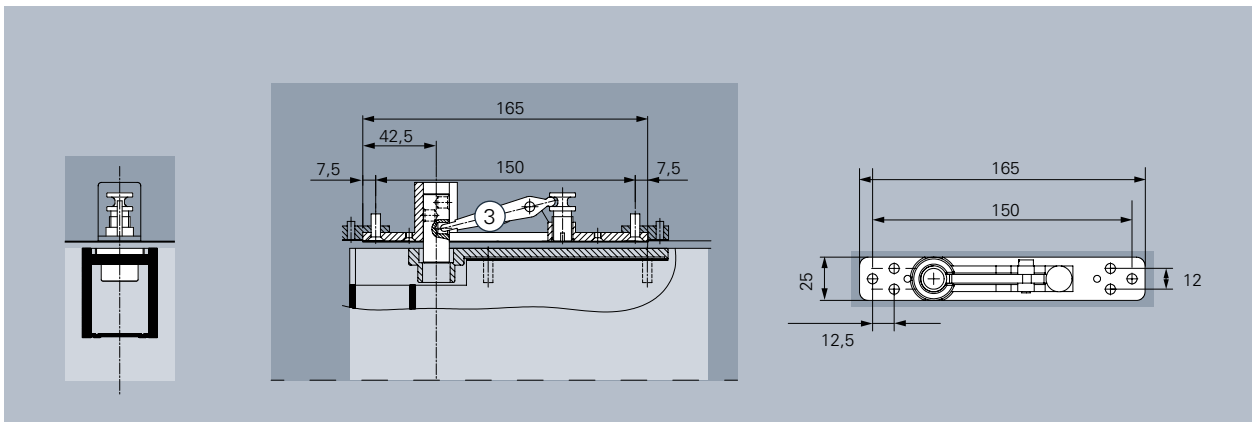

Frame installation, reception on top

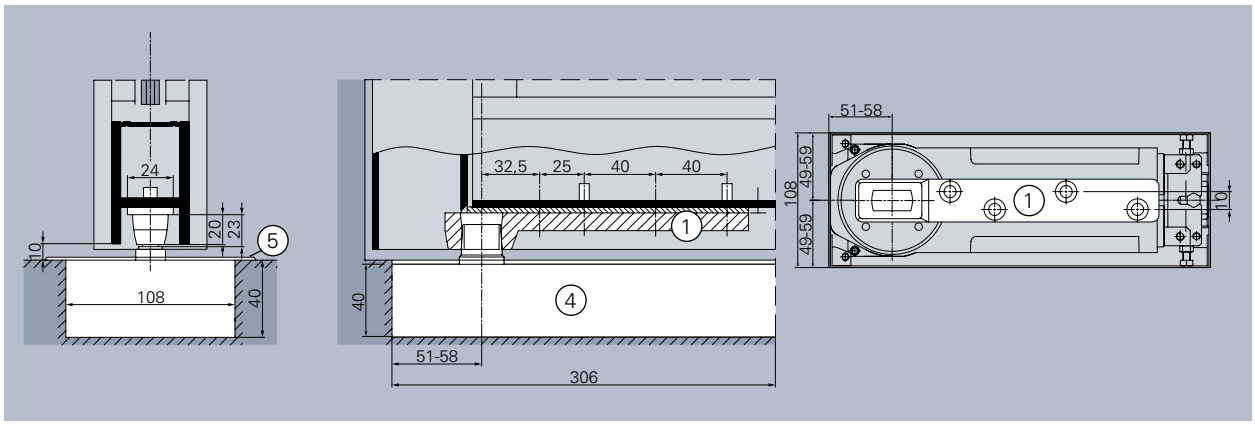

Floor mounting

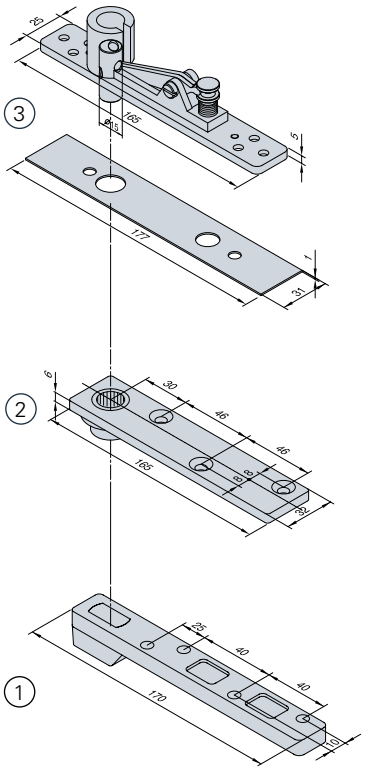

Ilustration: Accessory sets

Closing force diagram BTS, hinge side

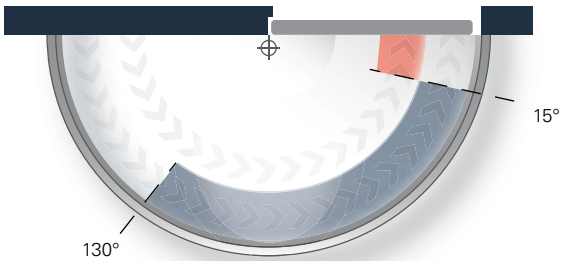

Closing speed
Continuously adjustable closing speed from approx. 130° to 10°

Latching speed
Increases the closing speed and thus the safe closing of the door, for example to overcome door seals, door locks and high air pressure.
Continously adjustable, works between 10° to 0°

Swissdoor ApS • Stenhuggervej 2 • 5471 Søndersø • Danmark Telefon +45 86 28 00 00 • mail@swissdoor.dk • www.swissdoor.dk

Order information

ECO BTS ▪ Product description

Floor spring ECO BTS

Door closer for single-leaf single action doors / double swing door. Installation in the floor incl. accessory set containing

① slide rail for metal and wooden doors
② reception for pivot hinge
③ adjustable pivot hinge
④ cement case
⑤ and cover made of stainless steel

- Dimensions: 306 / 108 / 40 mm
- Closing force: 3 or 4, not adjustable
- Back-check: optional, adjustable
- Closing speed: adjustable
- Latching speed: adjustable
- Opening angle: 130°
- Hold-open as option, 90° or 105°

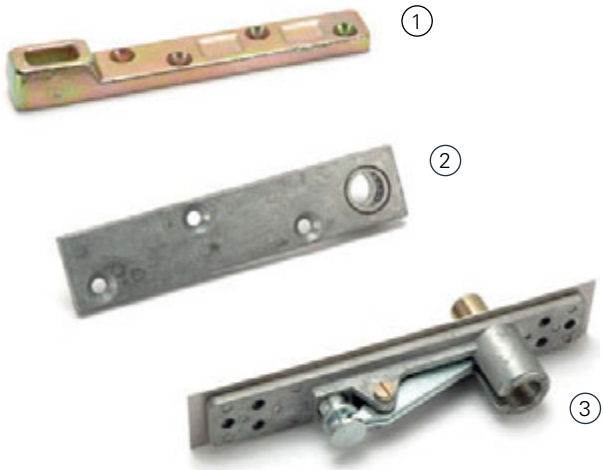

Illustration: Accessory sets

Article numbers

Door closer without back-check	Hold-open	Article number	Door closer with back-check	Hold-open	Article number
FH 843 (3)	Without hold-open	48000O00000			
FH 843 (3)	Hold-open 90°	48000O00001	FH 843 (3)	Hold-open 90°	48000O00003
FH 843 (3)	Hold-open 105°	48000O00002	FH 843 (3)	Hold-open 105°	48000O00004
FH 844 (4)	Without hold-open	48000O20000			
FH 844 (4)	Hold-open 90°	48000O20001	FH 844 (4)	Hold-open 90°	48000O20003
FH 844 (4)	Hold-open 105°	48000O20002	FH 844 (4)	Hold-open 105°	48000O20004

ECO FDC/-B

SWiSSDOOR
DØRTEKNIK FOR PROFESSIONELLE

gervej 2 • 5471 Søndersø • Danmark

Product characteristics		FDC	FDC-B
Closing force (continuously adjustable)	Size acc. to EN	3 – 6	4 – 6
Door width acc. to EN	< 1.400 mm	■	-
	Fire protection doors < 1.400 mm	-	■
Dimensions (incl. mounting plate)	Length in mm Depth in mm Height in mm	530 104 100	530 104 100
Hinge side with slide rail		■	-
Hinge-opposite side with standard arm		■	■
DIN left / right		◘	◘
Opening speed adjustable		■	■
Closing speed adjustable when mains operated, fixed when power failure		■	■
Hold-open time adjustable		1 – 30s	
Driving power adjustable		■	■
Door opening angle		70° - 105°	
TÜV-certified		DIN 18650	
Suitable for fire- and smoke control doors		-	F
Certified according to EU-Directive		CE	

■ Yes
- No
◘ Option

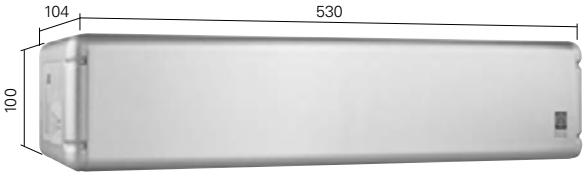

Dimensions: FDC / -B

2

ECO FDC / -B ▪ Opened by an electric motor - Controlled closure

Opened by an electric motor - controlled closure via a spring mechanism. The integrated damper unit stops the door from slamming shut. Automated door closure helps keep out airborne dust, wind gusts, odours and noise. If there is a power cut, the door can be closed by means of its spring mechanism from any position. The use of top quality components guarantees optimum performance and extended product life with minimal maintenance.

ECO FDC / -B Swing-door drive units are ideal both for new installations and building upgrades. The wide range of functions creates user-friendly access, while providing individual configuration of operating functions. Lightweight doors, heavy gates and even fire-rated doors can be automated without difficulty.

Power is intelligently harnessed in order to monitor the system and provide smooth operation with maximum reliability and security. Safety and security elements can include, depending on the building design, light barriers (photoelectric cells) or light scanners. Our drive mechanism is designed for the convenient, automatic operation of standard doors, and can be supplied with reliable fire-protection options when used to operate fire-rated doors. Safety sensors with configurable functions “Reverse” and “Stop” functions offer additional protection at the pinch points and in the event of oncoming traffic.

Risk elimination through planning
Together with the customer, ECO Schulte conducts a joint risk assessment (under consideration of the door user group and specific construction situation) in accordance with the standard DIN 18650 which describes the technical safety requirements for automatic door systems. This then forms the basis for the selection of various safety and security measures. Risk assessment is carried out during the planning phase so that the automatic door system can be installed and operated safely and reliably.

Order information

ECO FDC / -B ■ Product description

Safe and reliable opening and closing

Technical specifications: FDC

Main supply	230 V, 50 Hz, 13 A
Motor power consumption	<100 W
Ambient temperature	–15 to +70 °C
Use in dry rooms	max. relative air humidity 65%
Door opening angle	70 –105°
Opening speed	adjustable
Closing speed	adjustable with mains operation, fixed if there is a power failure
Hold-open time	1 — 30 sec (adjustable)
Driving power	adjustable
TÜV-certified	acc. to DIN 18650
Dimensions	530 x 100 x 104 mm
Weight incl. standard arm	11,3 kg

Basic planning data

	FDC	FDC-B for fire-rated doors
Door panel width	max. 700 — 1400 mm	max. 900 — 1400 mm
Activ range	Doors EN 3 — 6	Doors EN 4 — 6
Opening and closing	Motor-actuated opening, closure by spring force. The spring provides improved closing power to reinforce the shutting action.	
Function «Closing»	The door closes under full control by spring action from any position (self closure if power fails).	If a fire alarm or power cut is activated, the door closes under full control from any position by means of spring action.

A range of individual extra functions is also available:

- Reinforced closure
- Push and go function
- Adjustable opening width
- Safety monitoring with automatic stop/reverse mechanism
- Progressive regulation of opening and closing speed, hold-open time and motor power
- Optical/acoustic signal during movement of door mechanism
- Automatic closing sequence control for two-winged (bi-parting) systems
- Dry contact for further processing of information at a central building control point, or the connection of an electric lock, door open/shut signal, error display

Article numbers

Swing-door drive unit without arm	Colour	Article number
FDC	Stainless steel	358500547100000
FDC-B	Stainless steel	358500547101000

Please order safety elements which offer additional protection at squeezing points and for opposing traffic separately. Infrared **sensor strips acc. to DIN 18650!**
Please refer to page 181 for more information.

A joint casing for both drive units is available as an optional extra.

ECO **FDC / -B**

The convenient, high-performance solution.

Automation considerably enhances the user comfort of a traditional, manually-operated door. The flow of pedestrian traffic is increased. Cumbersome, difficult-to-open doors bECOme much easier to use. A motion detector can be used to provide contact-free access. Reliable door closure prevents a loss of valuable heated or cooled air in the building, resulting in large energy savings. The swing-door drive unit supports management functions such as controlled access and fire safety. Movement is monitored by a series of standard and norm compliant safety elements.

Wherever people work, travel, live, are cared for or congregate, there is a need for doors to facilitate their comings and goings. The automation of doors offers smooth access with unobstructed entry and exit. These drive mechanisms are ideal for use in public buildings, hospitals, hotels, airports, and industrial and commercial premises.

Cable plan FDC-B

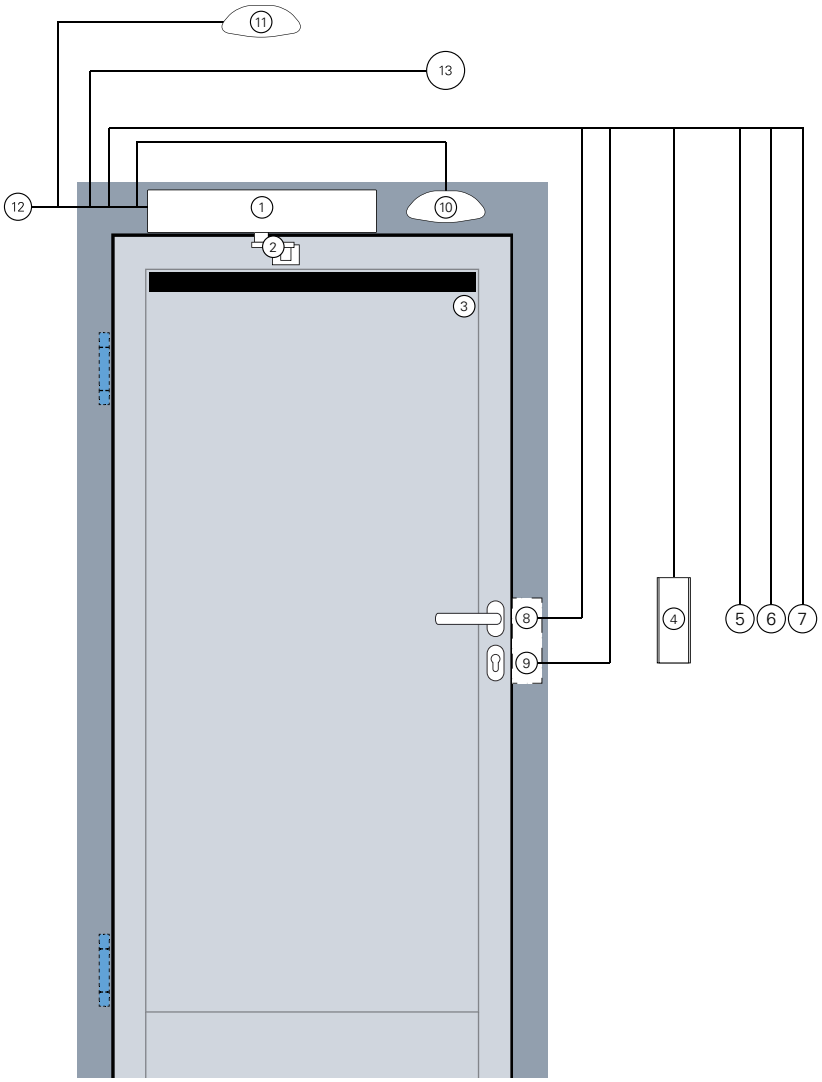

Pos.	Product, safety and handling elements	Description cable information
1	ECO FDC-B hinge-opposite side incl. mounting plate, mounting acc. to EN	3 x 1,5 mm² to Pos.12
2	Standard arm, hinge-opposite side	
3	Sensor strip, hinge-opposite side, revers	Cable by ECO, cable channel by building contractor
3.1	Sensor strip, BS, Stop	Cable by ECO, cable channel by building contractor
4	Flip switch inside, with surface-mounted socket	4 x 0,8 mm²
4.1.	Flip switch outside, with surface-mounted socket	4 x 0,8 mm²
5	Key sense switch	4 x 0,8 mm²
6	Push button "Door close"	4 x 0,8 mm²
7	Bedis - sense switch with LED display	4 x 0,6 mm²
8	Electric opener	4 x 0,8 mm²
9	Dead bolt switch contact	4 x 0,8 mm²
10	Switch ORS 142 W	4 x 0,8 mm²
11	Celling switch ORS 142, inside	4 x 0,8 mm²
11.1	Celling switch ORS 142, outside	4 x 0,8 mm²
12	Home office socket	3 x 1,5 mm² 230 V, 50 Hz, 13A
13	Radar OKI (inside)	
13.1	Radar OKA (outside)	

Swissdoor ApS • Stenhuggervej 2 • 5471 Søndersø • Danmark Telefon +45 86 28 00 00 • mail@swissdoor.dk • www.swissdoor.dk

Assembly FDC

Assembly of ECO FDC

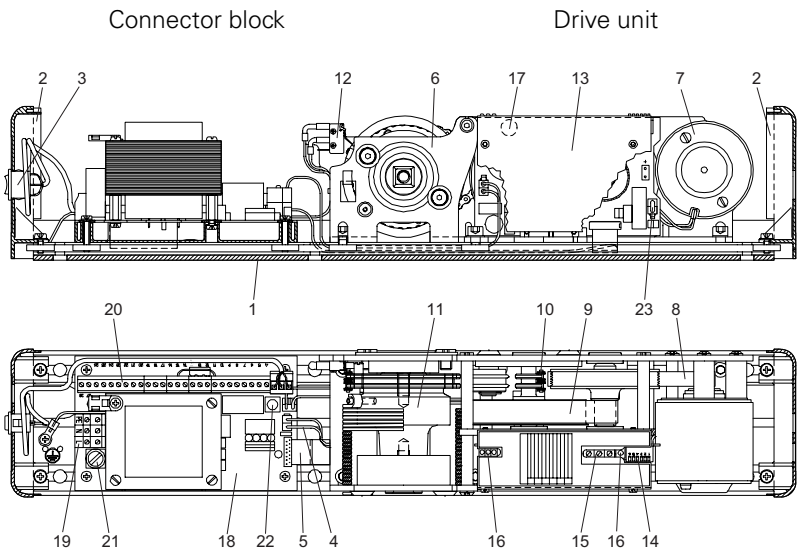

1 Chassis
2 Side cover
3 Sense switch 1-0-2
4 Power cable
5 Logic cable
6 Drive unit
7 DC motor
with interference electronic
8 Poly-V-belt transmission
9 Synchronous belt transmission
10 Linkage transmission
11 Driven shaft
12 Door surveillance switch
13 Controller
(with Logic-Servo-Unit LOSE)
14 DIL switch
15 Potentiometer
16 Light-emitting diode (status indicator)
17 Signal buzzer
18 Connector block
19 Clamp
20 Clamps for operation
and safety elements
21 Fine-wire fuse 1 AT, 5 x 20 mm
22 Reset button
23 Plug (mechanical closing)

Mounting drawing FDC

single-leaf door, illustration DIN right-door, DIN left laterally reversed

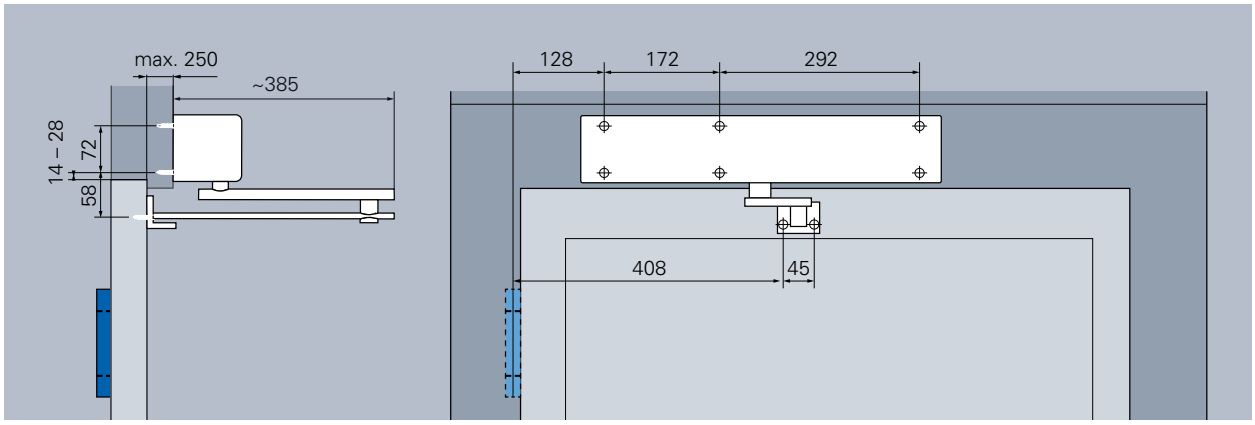

Installation on door frame with standard arm on hinge-opposite side for single-leaf doors (FDC, pushing)

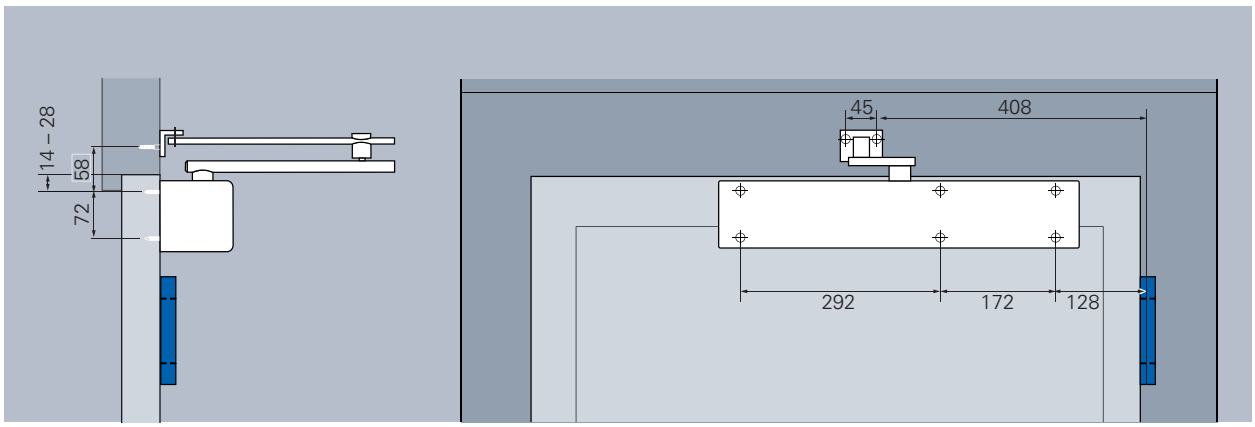

Installation on door leaf with standard arm on hinge-side for single-leaf doors (FDC, pushing)

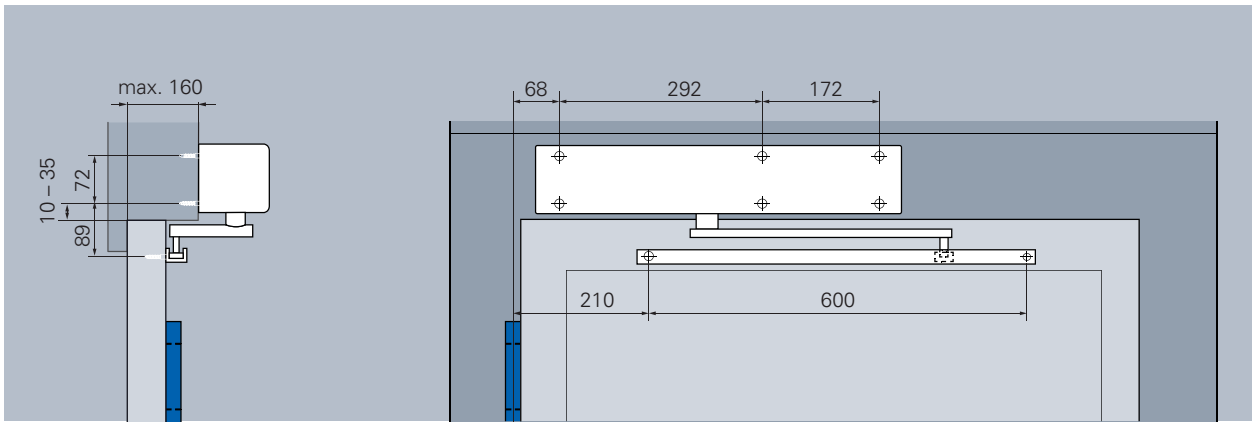

Installation on door frame with slide rail on hinge-side for single-leaf doors (FDC, pulling)

Swissdoor ApS • Stenhuggervej 2 • 5471 Søndersø • Danmark Telefon +45 86 28 00 00 • mail@swissdoor.dk • www.swissdoor.dk

Mounting drawing FDC-B

single-leaf door, illustration DIN right, DIN left laterally reversed

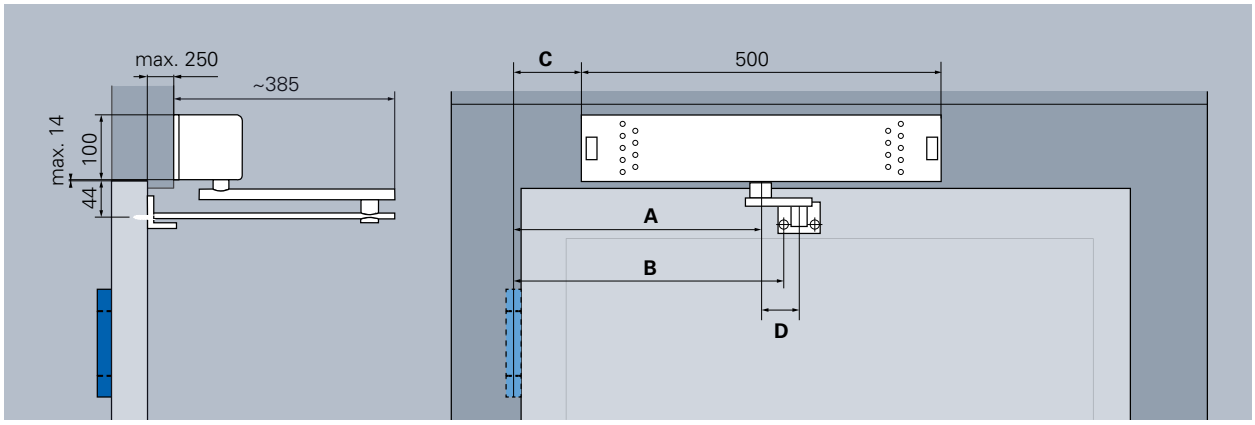

Installation on door frame with standard arm on hinge-opposite side for single-leaf doors (FDC, pushing) F

Please refer to following table in order to check for the corresponding closing force:

EN	Door width	A	B	C	D
EN 4	950 – 1.100 mm	265	378	15	135
EN 5	1.101 – 1.250 mm	285	348	35	85
EN 6	1.251 – 1.400 mm	374	413	124	61

Range of application FDC

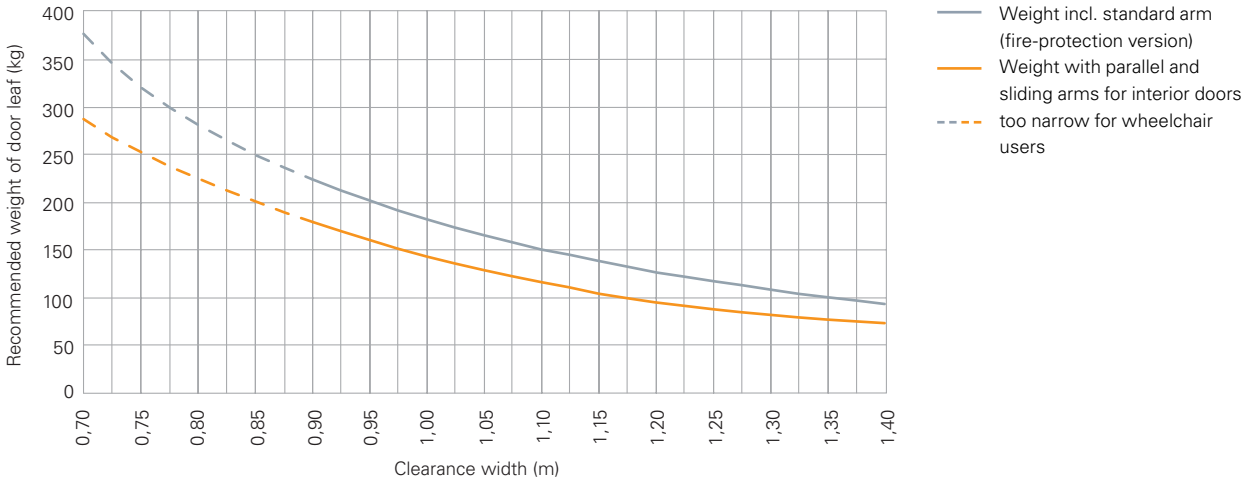

Mounting drawing FDC

Double-wing door, illustration DIN right, DIN left laterally reversed

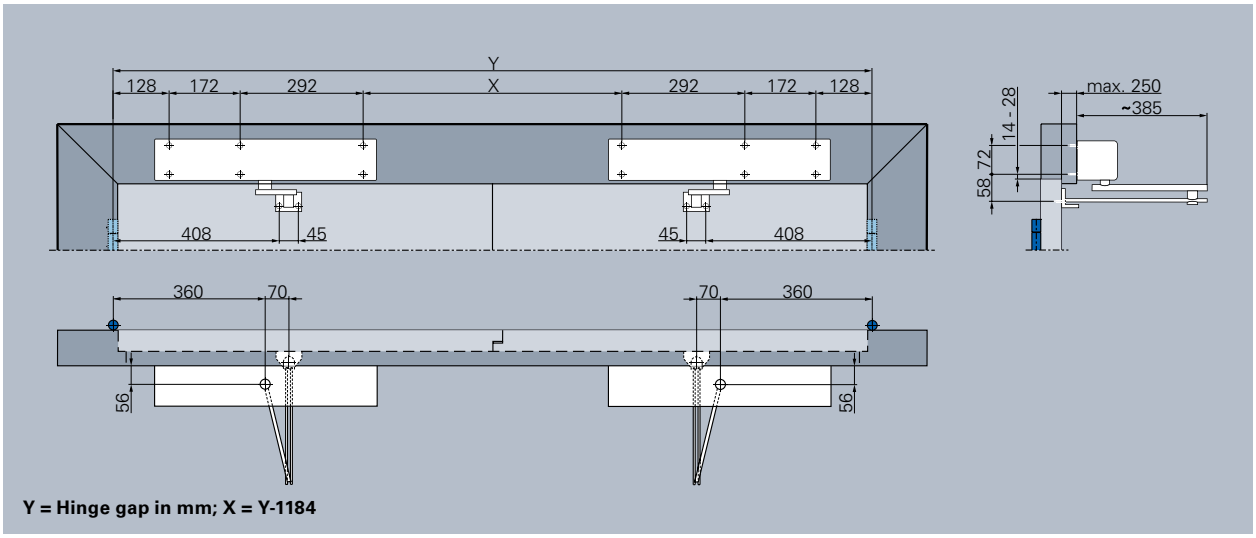

Double-wing execution with master and slave control, mounting with standard arm (hinge-opposite side)

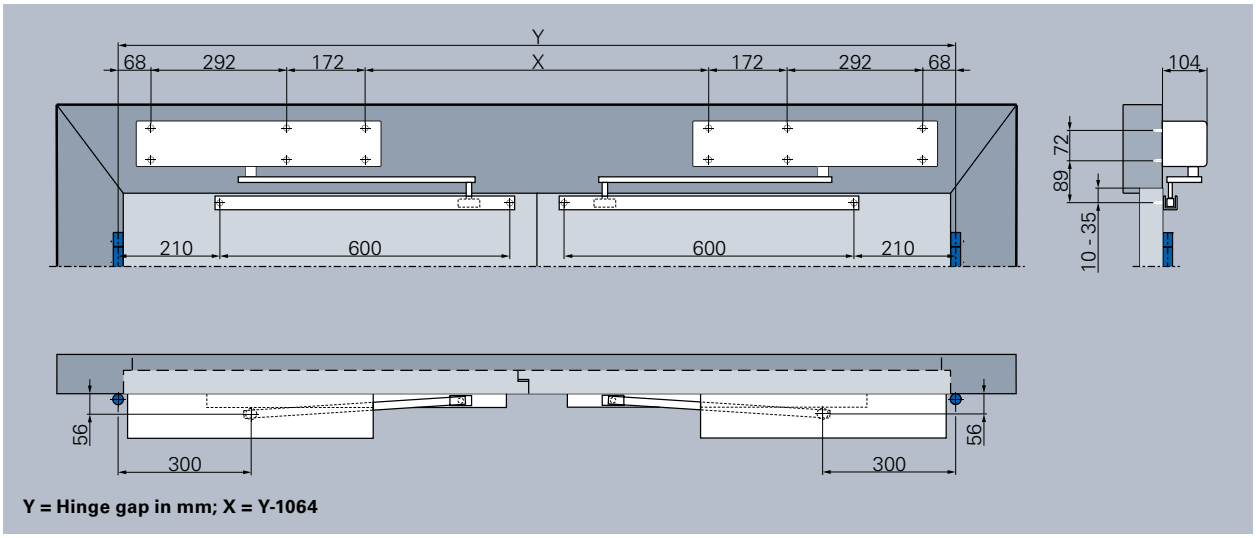

Double-wing execution with master and slave control, mounting with slide rail (hinge side)

Swissdoor ApS • Stenhuggervej 2 • 5471 Søndersø • Danmark Telefon +45 86 28 00 00 • mail@swissdoor.dk • www.swissdoor.dk

Mounting drawing FDC-B

Double-wing door, illustration DIN right, DIN left laterally reversed

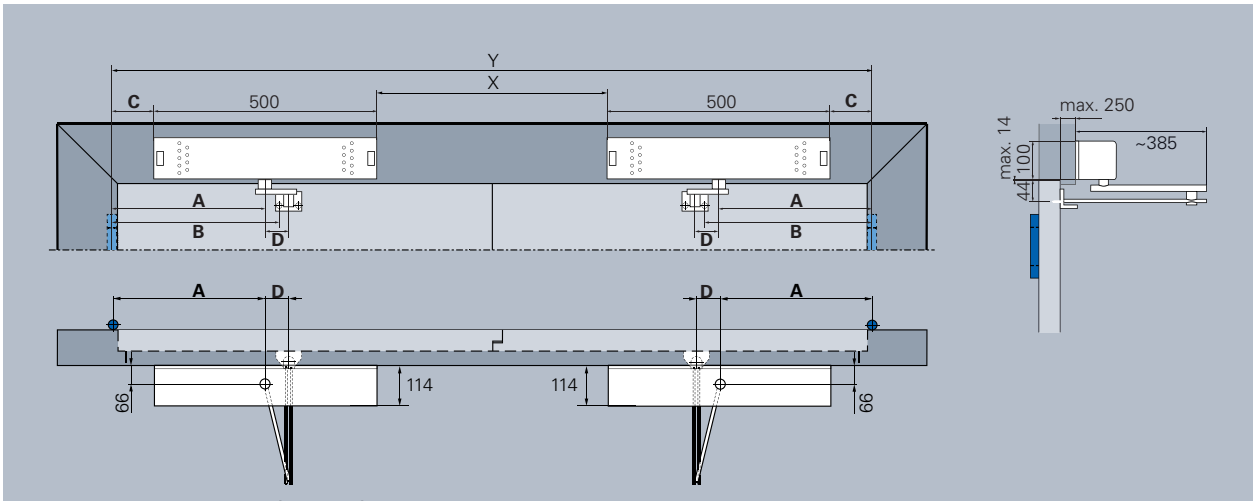

Y = Hinge gap in mm; X = Y-(100+2xC)

Double-wing execution with master and slave control or with mechanical closing sequence SR (for the use on smoke - and fire-protection doors) **F**

Please refer to following table in order to check for the corresponding closing force:

EN	Door width	A	B	C	D
EN 4	950 – 1.100 mm	265	378	15	135
EN 5	1.101 – 1.250 mm	285	348	35	85
EN 6	1.251 – 1.400 mm	374	413	124	61

Mechanical closing sequence system for FDC / -B

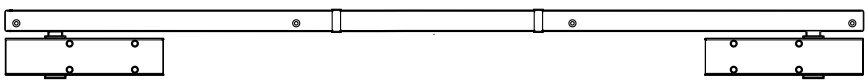

The closing sequence selector ensures that in case of fire or power failure the door leafs are closing in the correct order. That means: passive leaf (1) first, active leaf (2) last.

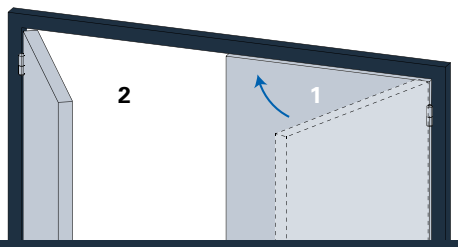

Closing sequence selector	
Closing sequence selector SR	incl. two pivot hinges, automisation of active and passive leaf
Closing sequence selector SR-TS	incl. pivot hinge and TS-61, automisation of active leaf
Closing sequence selector SR-EF-1S	incl. pivot hinge and TS-61, automisation of active leaf, hold-open in passive leaf
Dual locking device 1 / 2	for automatic locking and unlocking of passive leaf
MK Basis-1	Panic flap for full panic doors in fire protection

Airport Düsseldorf,
Germany

SWiSSDOOR
DØRTEKNIK FOR PROFESSIONELLE

ECO **Schulte**
Worldwide trust.

For years, ECO products have been used everywhere in the world where quality, reliability and safety are important. ECO systems obtained acceptance by the connection of functionality and design.

We would like to take this opportunity to say how much we appreciate the trust ECO products enjoy throughout the world. We regard this as a challenge to meet the future requirements of our customers and of the market through continuous further development and demand-oriented production.

Swissdoor ApS • Stenhuggervej 2 • 5471 Søndersø • Danmark Telefon +45 86 28 00 00 • mail@swissdoor.dk • www.swissdoor.dk

SWiSSDOOR
DØRTEKNIK FOR PROFESSIONELLE

ECO Accessories

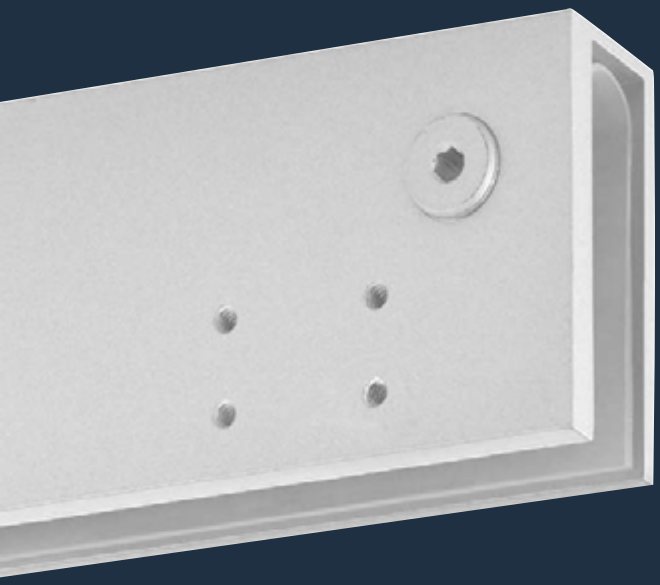

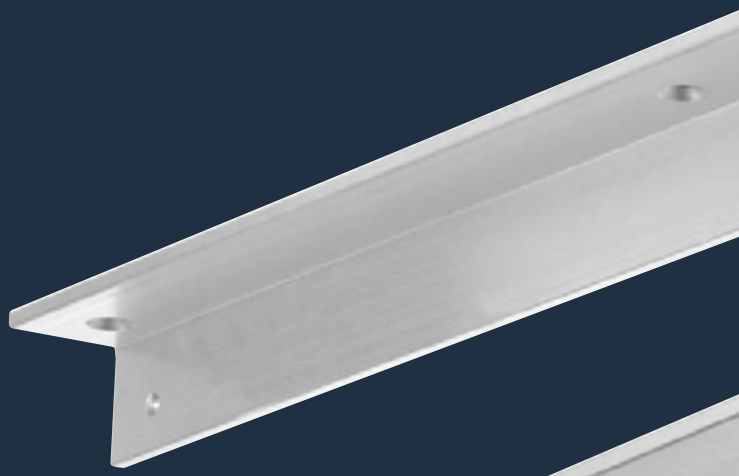

ECOMount

The special feature of the ECO Newton assembly system is that the mounting plate is completely concealed by the aluminium body of the closer, thus making it invisible. The mounting plate has standardized drill holes which guarantee time-saving, secure and simple attachment.Same version DIN left / right!

EN 1154 A

F

CE

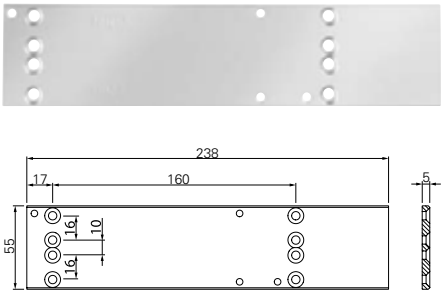

For ECO **Newton TS-61**

with DIN EN holes

Acc. to **EN 1154**, supplemetary sheet 1.

Mounting plate	Article number	Material
TS-61	300300310000000	Aluminium F1, anodized

EN 1154 A

F

CE

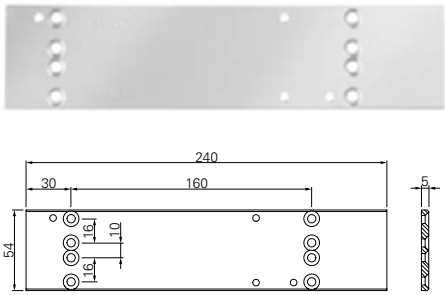

For ECO **Newton TS-51**

with DIN EN holes

Acc. to **EN 1154**, supplemetary sheet 1.

Mounting plate	Article number	Material
TS-51	300300320000000	Aluminium F1, anodized

EN 1154 A

F

CE

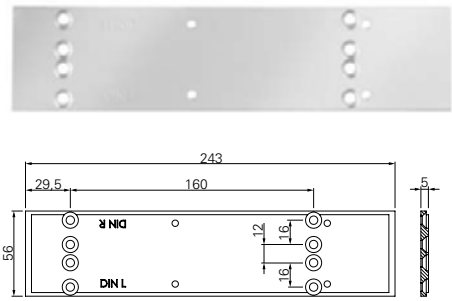

For ECO **Newton TS-41, TS-31, TS-50**

with DIN EN holes
After mounting the sides of the mounting plate are still visible.

Acc. to **EN 1154**, supplemetary sheet 1, only with slide rail B and TS-50

Mounting plate	Article number	Material
TS-41,TS-31,TS-50	30960011A	Aluminium F1, anodized
TS-41,TS-31,TS-50	30960011E	White RAL 9016
TS-41,TS-31,TS-50	30960011D	Brown RAL 8014
TS-41,TS-31,TS-50	30960011G	Black RAL 9005

Swissdoor ApS • Stenhuggervej 2 • 5471 Søndersø • Danmark Telefon +45 86 28 00 00 • mail@swissdoor.dk • www.swissdoor.dk

ECO COVER²

The full cover is an optional stainless steel covering for the ECO Newton door closers and related slide rails. The overall appearance is perfected by a lever arm with a stainless steel look. A cover on the closer body is available for standard arm closers.

ECO**cover²** can be ordered as set on request.

For the door closer body

Finish: Stainless steel polished or satin

Full cover for	Colour	Article number	**Full cover for**	Colour	Article number
ECO **Newton TS-61**	Stainless steel satin	350400052Q00001	ECO **Newton TS-61**	Stainless steel polished	350400052Q00002
ECO **Newton TS-51**	Stainless steel satin	350400053Q00001	ECO **Newton TS-51**	Stainless steel polished	350400053Q00002
ECO **Newton TS-41**	Stainless steel satin	350400054Q00001	ECO **Newton TS-41**	Stainless steel polished	350400054Q00002
ECO **Newton TS-31**	Stainless steel satin	350400054Q00001	ECO **Newton TS-31**	Stainless steel polished	350400054Q00002
ECO **Newton TS-50**	Stainless steel satin	350400054Q00001	ECO **Newton TS-50**	Stainless steel polished	350400054Q00002
ECO **Newton TS-20**	Stainless steel satin	350400054Q00001	ECO **Newton TS-20**	Stainless steel polished	350400054Q00002

For the slide rail

Finish: stainless steel polished or satin

Full cover for	Colour	Article number	**Full cover for**	Colour	Article number
Slide rail B	Stainless steel satin	350400050Q00001	**Slide rail B**	Stainless steel polished	350400050Q00002

Arm for slide rail B

Steel zinc plated, lacquered in silver

Arm for slide rail B	Colour	Article number
ECO **Newton TS-61/51**	Silver RAL 9006	3056100013
ECO **Newton TS-41/31**	Silver RAL 9006	30S4100013

Stainless steel polished

Arm for slide rail B	Colour	Article number
ECO **Newton TS-61/51**	Stainless steel	30S6100046
ECO **Newton TS-41/31**	Stainless steel	30S1100000Q1

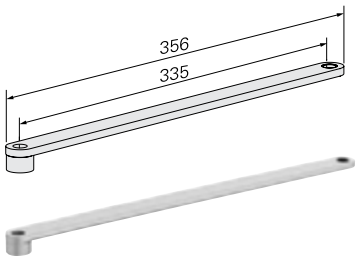

Arm for slide rail B

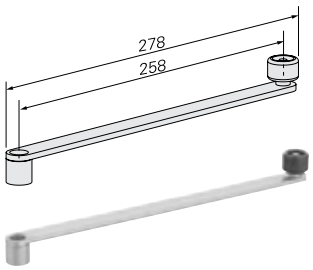

Arm for slide rail K

Arm for slide rail K

Steel zinc plated, lacquered in silver

Arm for slide rail K	Colour	Article number
ECO **Newton TS-41/31**	Silver RAL 9006	30S3100013

Standard arm

Steel zinc plated

Standard arm	Colour		Article number	Standard arm	Colour		Article number
ECO **Newton TS-20/50**	Silver	RAL 9006	350100000A70000	ECO **Newton TS-14-16**	Silver	RAL 9006	350100000A70000
ECO **Newton TS-20/50**	White	RAL 9016	350100000E70000	ECO **Newton TS-14-16**	White	RAL 9016	350100000E70000
ECO **Newton TS-20/50**	Brown	RAL 8014	350100000D70000	ECO **Newton TS-14-16**	Brown	RAL 8014	350100000D70000
ECO **Newton TS-20/50**	Black	RAL 9005	350100000G70000	ECO **Newton TS-14-16**	Black	RAL 9005	350100000G70000

Hold-open arm

The hold-open offers an additional hold-open function to fix the door. Steel zinc-plated. Hold-open angle 70° - 130°. Hold-open force adjustable.

Not allowed for the use on fire-protection doors.

Hold-open arm	Colour		Article number	Hold-open arm	Colour		Article number
ECO **Newton TS-20/50**	Silver	RAL 9006	350100000A77000	ECO **Newton TS-14/15/16**	Silver	RAL 9006	350100000A77000
ECO **Newton TS-20/50**	White	RAL 9016	350100000E77000	ECO **Newton TS-14/15/16**	White	RAL 9016	350100000E77000
ECO **Newton TS-20/50**	Brown	RAL 8014	350100000D77000	ECO **Newton TS-14/15/16**	Brown	RAL 8014	350100000D77000
ECO **Newton TS-20/50**	Black	RAL 9005	350100000G77000	ECO **Newton TS-14/15/16**	Black	RAL 9005	350100000G77000

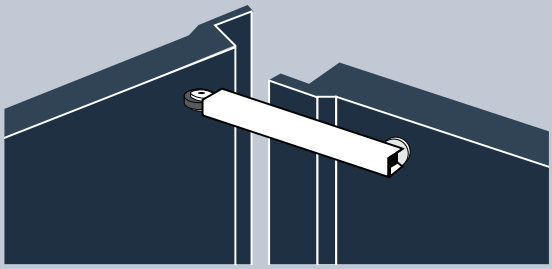

Panic flap MK Basis-1

Panic flap MK Basis

The closing squence ensures that the active and passive leaf are closing in the correct order, e.g. the passive leaf first, active leaf last. The function of the closing sequence is only given if the active leaf is opened up to a certain angle. If the passive leaf is opened first (full panic version), the panic flap ensures that also the active leaf opens to such extend that the closing sequence can control the active leaf. Material: steel with nylon roll, zinc-plated (silver colour)

When mounting on the closing sequence hinge-opposite side, please order the extended version MK Basis-2.
Tested by MPA-NRW (state-owned testing facility).

Panic flap	Colour		Article number
MK Basic-1 (hinge-opposite side)	Silver	RAL 9006	306107024300080
MK Basis-2 (for closing sequence hinge-opposite side)	Silver	RAL 9006	306107331300225

Swissdoor ApS • Stenhuggervej 2 • 5471 Søndersø • Danmark Telefon +45 86 28 00 00 • mail@swissdoor.dk • www.swissdoor.dk

Accessories – Under-lintel angle

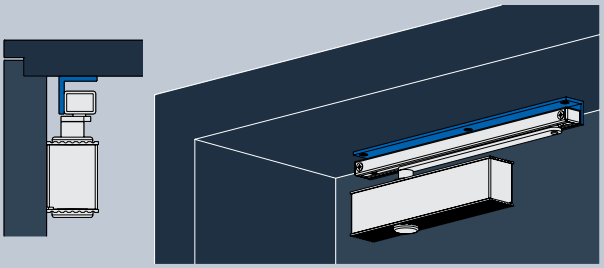

Under-lintel angle for standard mounting door closer with slide rail

Under-lintel angle for slide rail B and K

For standard mounting installation of the slide rail on hinge-opposite side for doors with deep door lintels. Under-lintel angle made of aluminium.

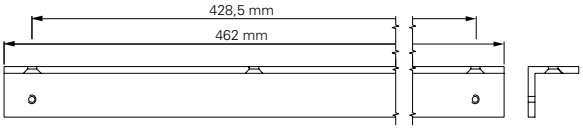

Under-lintel angle for slide rail B

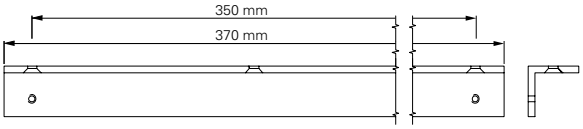

Under-lintel angle for slide rail K

Under-lintel angle	Material	Article number
Under-lintel angle slide rail B	Aluminium	350300J00A00000
Under-lintel angle slide rail K	Aluminium	300340E00A00000

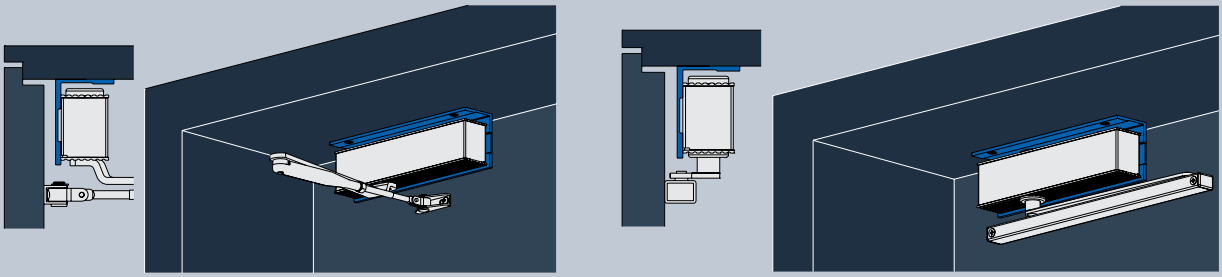

Under-lintel angel for head mounting door closer with standard arm (l.) or door closer with slide rail (r.).

Under-lintel angle for door closers with slide rail / standard arm

For head mounting of the door closer on hinge-opposite side for doors with deep door lintels. Under-lintel angle made of aluminium.

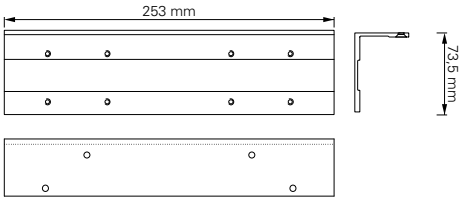

Under-lintel angle	Article number
ECO **Newton TS-61**	350310E00A00000
ECO **Newton TS-51**	350320E00A00000
ECO **Newton TS-41/31/50/20**	300330E00A00000

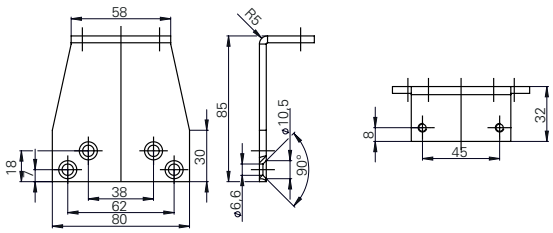

Angle bracket for standard arm

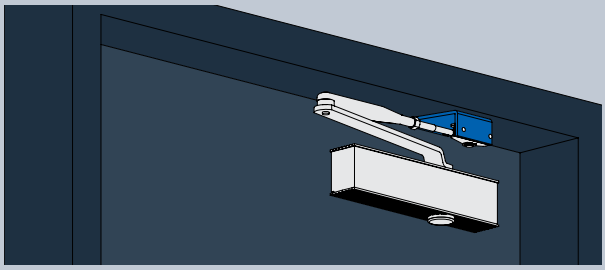

Angle bracket parallel arm mounting door closer with standard arm

Angle bracket for ECO **Newton TS-50/20**

For mounting the standard arm on the hinge-opposite side an profile frame constructions as well as over-rebated wooden doors with slim steel frames.

Not permitted to use on fire-and smoke control doors.

Angle bracket	Material	Article number
Angle bracket	Steel zinc plated	350300B00A00000

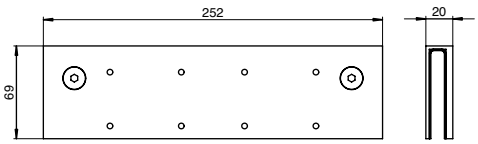

Glass clamping device ECO Newton TS-41

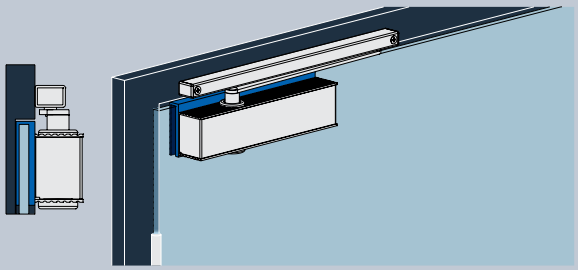

Mounting of glass clamping device

Glass clamping device for ECO **Newton TS-41**

Clamping device made of aluminium, silver coated for fixing an ECO door closer ECO Newton TS-41 onto a glass door.

Suitable for 8-10 mm glass (toughened safety glass). Same version DIN left and DIN right. Including threaded holes for the door closer. Aluminium F1 silver coated.

Glass clamping device	Colour	Article number
Aluminium	F1 coated	350310600A00000
Aluminium	White RAL 9016 coated	350310600E00000
Aluminium	Brown RAL 8014 coated	350310600D00000
Aluminium	Stainless steel finish coated	350310600Q00000

Swissdoor ApS • Stenhuggervej 2 • 5471 Søndersø • Danmark Telefon +45 86 28 00 00 • mail@swissdoor.dk • www.swissdoor.dk

Accessories – Adaptor profile

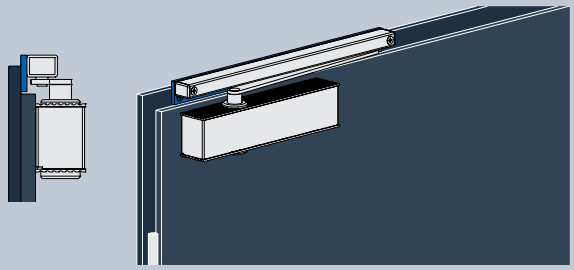

Adaptor profile for standard mounting door closer with slide rail

Adaptor profile for slide rail B and K

For installation of the slide rail on the pull side on profile door constructions as well as over-rebated wooden doors with slim steel frames.

Adaptor profile	Dimen-sions	Material	Article number
Adaptor profile B	428,5 mm	Steel zinc plated	350300R00A00010
Adaptor profile K	350 mm	Steel zinc plated	350300S00A00000

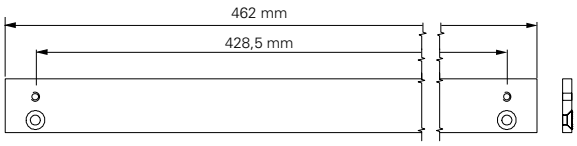

Adaptor profile for slide rail B

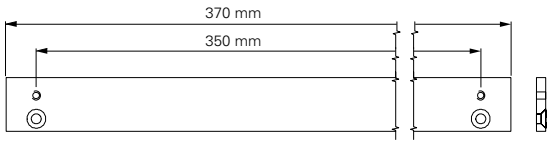

Adaptor profile for slide rail K

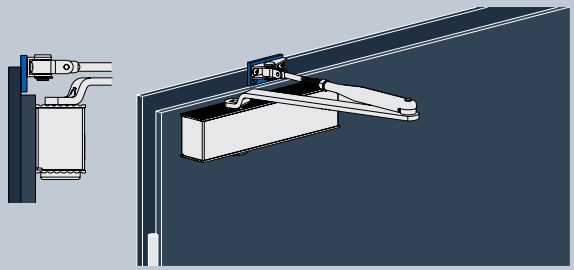

Adaptor profile for standard mounting door closer with standard arm

Adaptor profile for door closer with standard arm
ECO **Newton TS-50/20**

For installation of the slide rail on the pull side on profile door constructions as well as over-rebated wooden doors with slim steel frames.

Adaptor profile	Dimen-sions	Material	Article number
Door closer with standard arm	58 mm	Steel zinc plated	300300A00( )00000

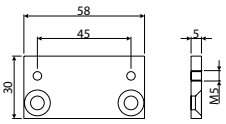

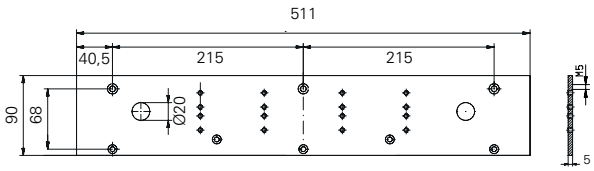

Adaptor profile for FTS

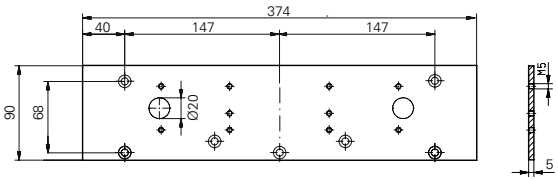

Adaptor profile for FTS-R

Adaptor profile

for steel frame installation of FTS 63 and FTS 63 R

For installation of the FTS on the pull side on steel frame door constructions.

Mounting plate	Article number	Material
FTS-63	350300M00A00001	Steel zinc plated
FTS-63 R	350300M00A00000	Steel zinc plated

Swissdoor ApS • Stenhuggervej 2 • 5471 Søndersø • Danmark Telefon +45 86 28 00 00 • mail@swissdoor.dk • www.swissdoor.dk

Accessories - Hold open

Accessory set FKL

Mechanical locking device for belated assembly in slide rail B. Not permitted for use in fire protection. 30 x 21 mm.

Suitable for slide rail B.

Mechanical locking device FKL	Article number
FKL-GS-B	350100000056200

Accessory set MOL I slide rail Basis *

Mechanically adjustable opening limit for the slide rail B (Basis) The opening angle can be locked by moving the MOL in the slide rail. 30 x 20 mm.

Mechanically adjustable opening limit	Article number
ÖB-GS-B	350100000054000

Accesory set MOL II ITS 20 x 20 *

Mechanically adjustable opening limit for the slide rail ITS 20 mm x 20 mm. The opening angle can be locked by moving the MOL in the slide rail.

Mechanically adjustable opening limit	Article number
ÖB-ITS-BII	350100000053600

Accesory set MOL III ITS 20 x 12 *

Mechanically adjustable opening limit for the slide rail ITS 20 mm x 12 mm. The opening angle can be locked by moving the MOL in the slide rail.

Mechanically adjustable opening limit	Article number
ÖB-ITS-BIII	350100000053500

ECO **pivot hinge MOL 31 with door stopper function**

Free-running pivot hinge with adjustable opening limit. Opening angle can be adjusted between 80 - 130° by moving the MOL in the slide rail. The door shock is absorbed by the rubber part and thus takes over the door stopper function if no floor stopper can be installed.

Consists of

Pivot hinge with stainles steel cover (TS-31 body empty, without spring and oil), mounting plate, slide rail B with MOL, arm (long) with four edges

Mechanically adjustable opening limit	Article number
Pivot hinge MOL 31 with mechanically adjustable opening limit	30311100A01010

* **NOTE**!
To be used on light interior doors only. Normal use of door is recommended. Incorrect use or heavy doors increases the load on the hinges! Standard mounting pull side or push side (using an under-lintel angle). Installation according to DIN holes acc. to EN.

Accessories for hold-open devices (except ITS / FTS)

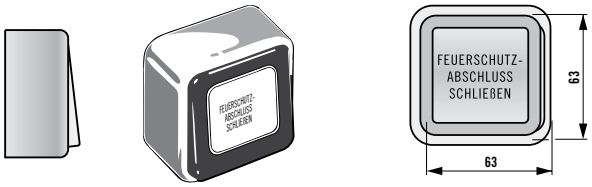

Interrupt button for hold-open devices - surface mounted

Contact: opener
Switching voltage: Max. 30 VDC
Switching current: Max. 1 A
Degree of protection: IP 20

Interrupt button	Article number
Interrupt button for hold-open devices	35040005

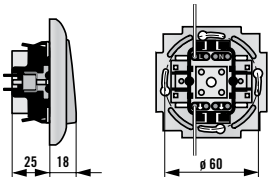

Interrupt button for hold-open devices - in-wall mounted

Contact: opener
Switching voltage: Max. 30 VDC
Switching current: Max. 1 A
Degree of protection: IP 20

Interrupt button	Article number
Interrupt button for hold-open devices	35040053

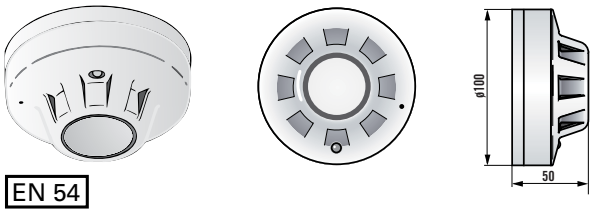

Floor smoke detector for hold-open devices

Supply voltage: 9 - 33 V direct current
Power consumption: 25 mA bei 24 V
Temperature range: -20°C to 60°C
Loading capacity: 1 A bei 24 V DC
Casing: white (nylon)

Smoke detector	Article number
RM 3000	350200000052000

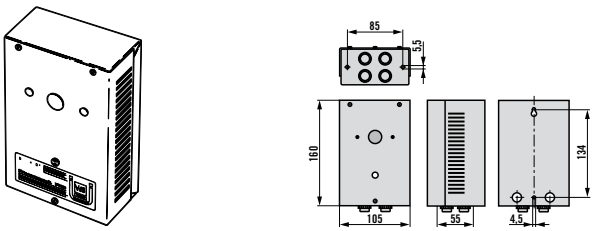

Power supply unit

Supply voltage: 230 V AC
Power consumption: 0,1 A
Output voltage: 24 V DC
Output current: 450 mA
Ambient temperatur: -10°C to 40°C
Colour: stainless steel white coated

	Article number
Power supply unit	35SVE24VDC

Swissdoor ApS • Stenhuggervej 2 • 5471 Søndersø • Danmark Telefon +45 86 28 00 00 • mail@swissdoor.dk • www.swissdoor.dk

Accessories for hold-open devices (except ITS / FTS)

Electromagnetic door retainer with swinging head

EM GD 60 S 175
Colour: zinc-plated / powder-coated RAL 9010
Supply voltage: 24 V DC
Power consumption: 79 mA (1,9 W)
Temperature range: -20°C to 60°C
Holding force: 1.000 N

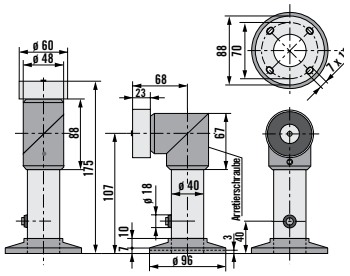

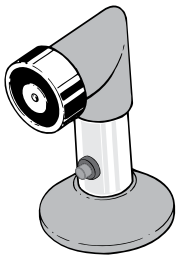

DIN EN 1155

Electromagnetic door retainer	Article number
Electromagnetic door retainer with swinging head	35EMGD605175

Electromagnetic door retainer with connection terminal

EM GD 60 F 26
Colour: magnet and base plate zinc-plated
Supply voltage: 24 V DC
Power consumption: 67 mA (1,6 W)
Temperature range: -20°C to 60°C
Holding force: 700 N

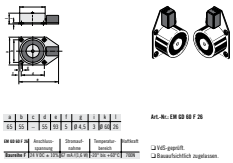

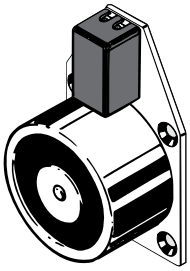

DIN EN 1155

Electromagnetic door retainer	Article number
Electromagnetic door retainer with connection terminal	35EMGD60F26

Electromagnetic door retainer with cover cap

EM GD 60 F 26
Colour: magnet and base plate zinc-plated
Supply voltage: 24 V DC
Power consumption: 79 mA (1,9 W)
Temperature range: -20°C to 60°C
Holding force: 1.000 N
Casing: white (nylon)

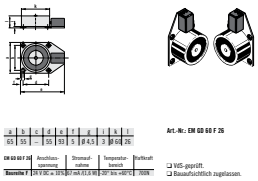

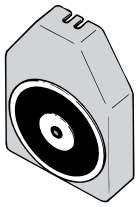

Electromagnetic door retainer	Article number
Electromagnetic door retainer with cover cap	35EMGD60F26A

Electromagnetic door retainer with interrupt button

EM GD 60 F 26 T
Colour: magnet and base plate zinc-plated
Supply voltage: 24 V DC
Power consumption: 79 mA (1,9 W)
Temperature range: -20°C to 60°C
Holding force: 1.000 N
Casing: white (nylon)

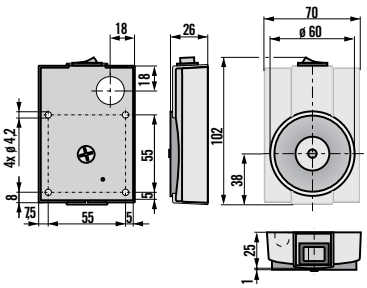

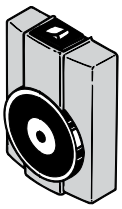

Electromagnetic door retainer	Article number
Electromagnetic door retainer with interrupt button	35EMGD60F26T

Accessories for hold-open devices (except ITS / FTS)

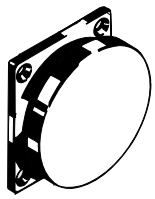

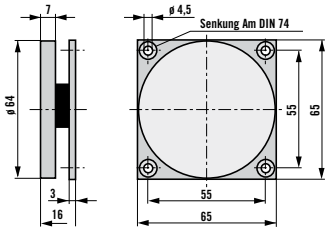

Flexible armature
with rubber base
AP GD 60 G 16
Anchor plate: Ø 64 mm x 7 mm
Rubber-based support: 20 mm

Anchor	Article number
Flexible armature	35APGD60G16

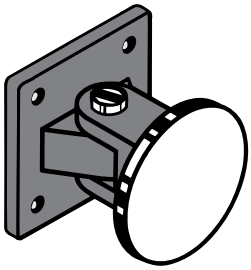

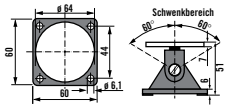

Durchmesser 64 mm

Anchor plate swivelling armature
AP GD 60 W 50
Anchor plate: Ø 64 mm x 7 mm
Angular freedom: ± 60°

Anchor plate	Article number
Swivelling armature	35APGD60W50

Swissdoor ApS • Stenhuggervej 2 • 5471 Søndersø • Danmark Telefon +45 86 28 00 00 • mail@swissdoor.dk • www.swissdoor.dk

Accessories for hold-open devices (with ITS / FTS)

Power supply unit NAG 02

Input voltage: 230 V AC, power consumption: 21 VA, output voltage: 24 V DC, output current: 460 mA, power output: 10,8 W, relay contact: potential-free changer, switching voltage: 30 V DC, switching current: 1A, switching capacity: 30 W, degree of protection in case: IP 40, security class: II, UeSpKat.: II, ambient temperature: +5°C - + 40°C

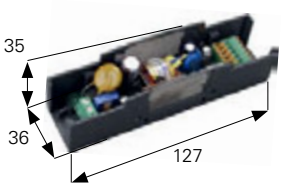

Power supply unit	Article number
NAG 02	35NAG025400082
Cover for NAG	354300735

Smoke switch ORS 142 W - standard

Function: scattered light, alarm level smoke: acc. to **EN 54**, part 7, release temperature: 70 ± 5° C, supply voltage: 18 to 24 VDC, power input at 28 VDC max. 22 mA, degree of protection: IP 42, ambient temperature: -20 to +75° C

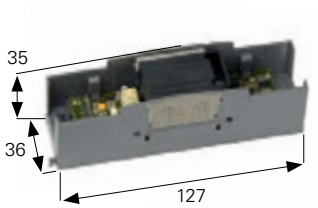

Smoke switch	Article number
ORS 142 W	355000572
Cover for ORS 142 W	354300735

EN 54

RSZ standard (smoke inducting system)

Smoke inducting system consists of smoke detector ORS 142 and power supply NAG 02.

Smoke inducting system	Article number
Standard	35RSZ1420008

EN 54

Accessories for combination with ITS / FTS

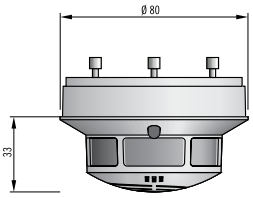

EN 54

ORS 142 smoke switch

Smoke detection: acc. to **EN 54**, part 7, temperature: 70°C, supply voltage: 18 – 28 V DC, power input at 28 V DC, at rest 22 mA, at an alarm 11 mA, at a disruption 16 mA, relay contact: opener, switch voltage: 30 V DC, switch flow: 1 A, breaking capacity: 30 W, degree of protection: IP 42, temperature range: -20°C to 60°C, casing: white (nylon)

Smoke switch	Colour		Article number
ORS 142	White	RAL 9010	350200000052100

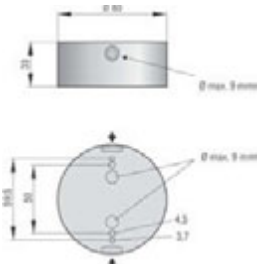

Mounting plate for ORS 142

For installation of smoke switch ORS 142 on-wall.

Mounting plate for ORS 142	Colour		Article number
ORS 143 A	White	RAL 9010	35500350

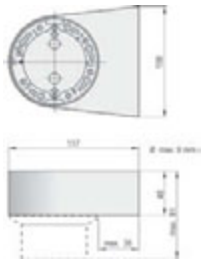

Mounting plate for ORS 142

Mounting plate for wall-mounting.

Mounting plate for ORS 142	Colour		Article number
ORS 143 W	White	RAL 9010	355000513

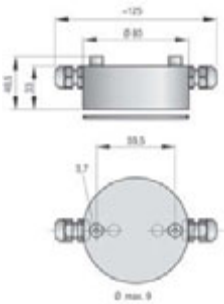

Surface-mounted mounting plate for ORS 142 in moist rooms

For installation of smoke switch ORS 142 on-wall in moist rooms.

Mounting plate for ORS 142	Colour		Article number
ORS 143 AF	White	RAL 9010	355000356

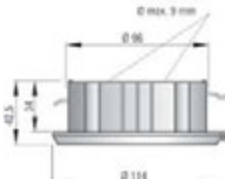

Mounting plate for ORS 142 in hollow ceilings

For installation of smoke switch ORS 142 in hollow ceilings.

Mounting plate for ORS 142	Colour		Article number
ORS 143 UH	White	RAL 9010	355000359

Swissdoor ApS • Stenhuggervej 2 • 5471 Søndersø • Danmark Telefon +45 86 28 00 00 • mail@swissdoor.dk • www.swissdoor.dk

Accessories for combination with ITS / FTS

Electromagnetic door retainer THM 413

Rated operating voltage: 24 VDC
Power consumption: 63 mA
Input power: 1,5 W
Holding force: 490 N
Duty rating: 100%
Degree of protection: IP 40

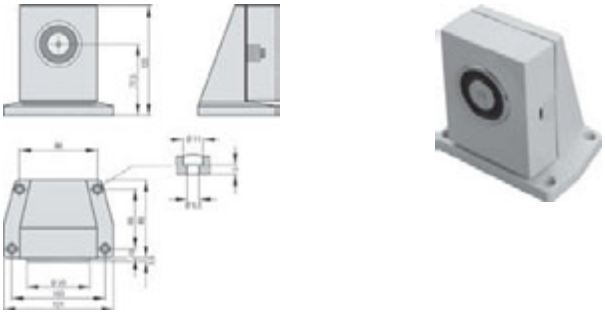

Electromagnetic door retainer	Article number
THM 413	356500002

Electromagnetic door retainer THM 425/425-1

Rated operating voltage: 24 VDC
Power consumption: 63 mA
Input power: 1,5 W
Duty rating: 100%
Degree of protection: IP 40

Electromagnetic door retainer	Adhesive force (Newton)	Article number
THM 425	490 N	356500016
THM 425-1	1372 N	356500020

Electromagnetic door retainer THM 433/433-1

Rated operating voltage: 24 VDC
Power consumption: 63 mA
Input power: 1,5 W
Duty rating: 100%
Degree of protection: IP 40

Electromagnetic door retainer	Adhesive force (Newton)	Article number
THM 433	490 N	356500096
THM 443-1	1372 N	356500097

Electromagnetic door retainer THM 439/185 with swinging head

Rated operating voltage: 24 VDC
Power consumption: 63 mA
Input power: 1,5 W
Holding force: 490 N
Duty rating: 100%
Degree of protection: IP 40

Electromagnetic door retainer	Length	Article number
THM 439/185	185 mm	356500129
THM 439/335	335 mm	356500127
THM 439/485	485 mm	356500128

Electromagnetic door retainer THM 440

Rated operating voltage: 24 VDC
Power consumption: 63 mA
Input power: 1,5 W
Holding force: 490 N
Duty rating: 100%
Degree of protection: IP 40

Electromagnetic door retainer	Article number
THM 440	356500109

Accessories for combination with ITS / FTS

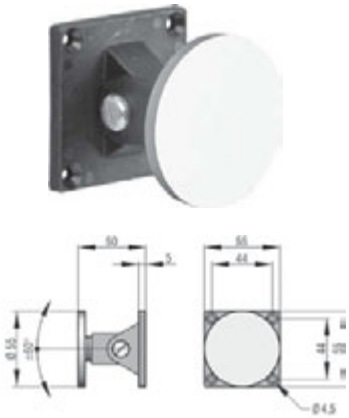

Anchor plate AFS 55 - Flexible armature suitable for THM 413, 433, 439 and 440
Anchor plate: Ø 55 mm x 5 mm
Angular freedom: ± 60°

Anchor plate	Article number
AFS 55	356500102

Anchor plate AFS 75 - Flexible armature suitable for THM 425, 425-1, 433-1
Anchor plate: Ø 75 mm x 5 mm
Angular freedom: ± 60°

Anchor plate	Article number
AFS 75	356500103

Anchor plate ATS 55 - Telescopic anchor suitable for THM 413, 433, 439 and 440
Anchor plate: Ø 55 mm x 5 mm
Swept volume: 20 mm

Anchor plate	Article number
ATS 55	356500100

Anchor plate ATS 75 - Telescopic anchor suitable for THM 425, 425-1 and 433-1
Anchor plate: Ø 75 mm x 5 mm
Swept volume: 20 mm

Anchor plate	Article number
ATS 75	356500101

Swissdoor ApS • Stenhuggervej 2 • 5471 Søndersø • Danmark Telefon +45 86 28 00 00 • mail@swissdoor.dk • www.swissdoor.dk

Accessories for combination with ITS / FTS

Anchor plate ASS 55
suitable for THM 413, 433, 439 and 440
Anchor plate: Ø 55 mm x 5 mm
Rubber-based support: 8 mm

Anchor plate	Article number
ASS 55	356500023

Anchor plate ASS 65
suitable for THM 425
Anchor plate: Ø 65 mm x 5 mm
Rubber-based support: 8 mm

Anchor plate	Article number
ASS 65	356500024

Anchor plate ASS 75
suitable for THM 425-1
Anchor plate: Ø 75 mm x 5 mm
Rubber-based support: 8 mm

Anchor plate	Article number
ASS 75	356500025

Test gas 918/5
Test gas 918/5 for operation test (simulating the smoke detection) of the smoke switches / smoke buttons.
Free from halogenated carbon hydride (FCKW or other).

Test gas	Article number
918/5	356900124

Accessories FDC / -B

Mounting plate

Neccessary for fire-rated doors as well as mounting on brickwork

Mounting plate	Article number
MPL	358500547394000

Door stop

Mechanical stop where no floor stop can be set.

Range of use: FDC/-B in connection with standard or slide arms. Not possible with short shims and low-level installation.

When connected with the FC-B, the mounting plate must also be installed.

Must be installed +50 mm with axis extension!

Door stop	Article number
OA	358500547124000

Brake for holding magnet

For a 90° setting for the function "permanent open" (retrofit kit)

Brake for holding magnet	Article number
HMB	358500547467000

Axis extension

To be used for special mountings

Axis extension		Article number
Axis extension 20 slide arm	20 mm	358500547111000
Axis extension 50 slide arm	50 mm	358500547112000
Axis extension 20 standard arm	20 mm	358500547111000
Axis extension 50 standard arm	50 mm	358500547112000

Swissdoor ApS • Stenhuggervej 2 • 5471 Søndersø • Danmark Telefon +45 86 28 00 00 • mail@swissdoor.dk • www.swissdoor.dk

Accessories FDC / -B

BEDIS control device complete

For setting all control functions as well as programming via switch function with LED status display.

Sense switch	Article number
Bedis	35850723150000

Key sense switch (in-wall mounted)

For setting the functions "permanent open" "automatic" or "manual open" for authorized persons.

Sense switch	Article number
SPS	358506442602000

Interrupt button HAT 02 AP / UP

Surface mounted / in-wall mounted
Contact: Opener switching voltage: Max. 30 VDC
Switching current: Max. 1 A, Degree of protection IP 20

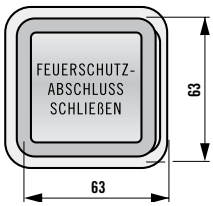

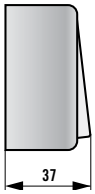

Interrupt button	Article number
HAT 02 AP/UP	356500143

Flip switch

Function Door "OPEN".
System of protection IP 40
80x80 mm

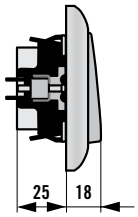

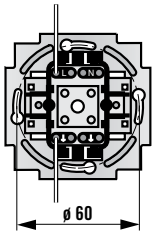

Interrupt button	Article number
HAT AUF AP/UP	358506443211000

Accessories FDC / -B

Flip switch

Function Door "OPEN". Supply voltage 250 VAC / 30 VDC Current consumption max. 10 AAC / 2 ADC
System of protection IP 40 225x83 mm

Flip switch		Article number
GFT	platinum grey (RAL 7036)	358506443210000

Elbow switch

For the use with arm or elbow.
For the use in sanitary areas.

Elbow switch	Article number
EBT	358500734282000

Radar 1000 Domino

Radar motion detector which acts as surge generator for automatic doors.

Radar 1000 Domino	Article number
Domino 1000	358506466127000

Radar Merkur SE/F

Radar motion detector which acts as surge generator for automatic doors, direction - sensitive.

Radar Merkur SE/F	Article number
Merkur SE/F	358506466126000

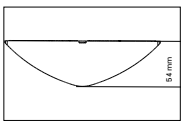

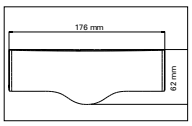

Swissdoor ApS • Stenhuggervej 2 • 5471 Søndersø • Danmark Telefon +45 86 28 00 00 • mail@swissdoor.dk • www.swissdoor.dk

Accessories FDC / -B

Sensor strip

DIN 18650

Active infrared sensor for automatic doors. Secures the pedestrian traffice area. Stops and reverses when detecting obstacles.

Sensor strip	Article number
with 2 sensors, length up to 1100 mm (can be shortened)	358506452243000
with 3 sensors, length up to 1500 mm (can be shortened)	358506466402000

Finger protection shade

Protection of squeezing points between door leaf and door frame at the hinge-opposite side.

Belated mounting possible.

Finger protection shade	Height	Article number
FSR	1920 mm	3504710132

Door stop / Wall stop

Stainless steel, satin
Including fixing material.

Door stop	Article number
BS 65	257009.46
WS 46	257008.46

Door stop BS 65

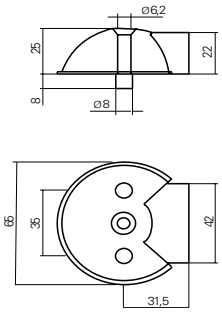

Wall stop WS 46

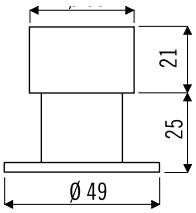

Accessories FDC / -B

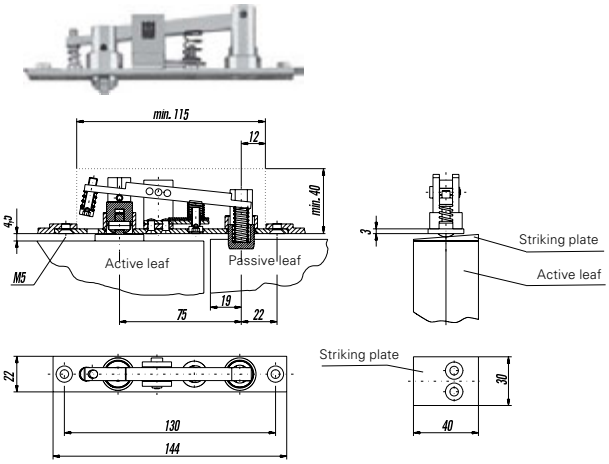

Dual locking device system 1

The passive door leaf is locked when the active door leaf is closed since the indexing bolt is pushed up, causing the locking bolt to engage in the passive door leaf. The passive door leaf is likewise unlocked when the active door leaf is opened since the locking bolt is retracted by spring pressure. The pressure of the door closer ensures that the passive door leaf remains in closed position.

Delivery includes striking plate.

Dual locking device system	Article number
Dual locking device system 1	204585500000000

Dual locking device system 2

In addition to system I the top fastening, the passive door leaf can also be locked at the bottom. A continous locking bar is built into the passive door leaf in a resilient mounting. The locking bolt presses against the locking bar which engages in the ground, securing the passive door leaf. When the active door leaf is opened, the locking bolt is pulled back and the locking bar is in its initial position.

Scope of delivery included locking bar (2.500 mm).

Dual locking device system	Article number
Dual locking device system 2	204586500000000

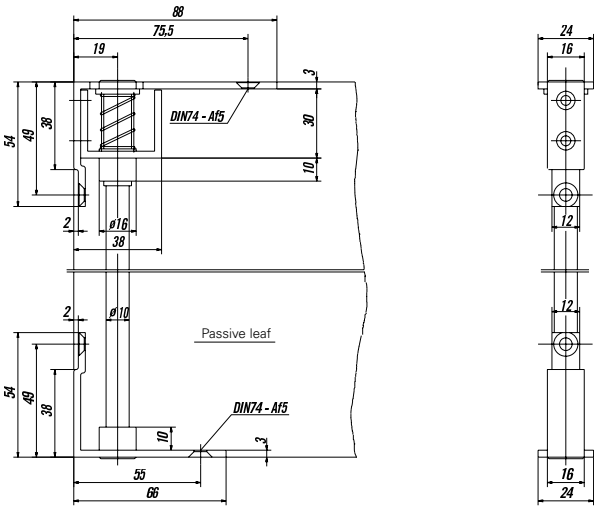

Swissdoor ApS • Stenhuggervej 2 • 5471 Søndersø • Danmark Telefon +45 86 28 00 00 • mail@swissdoor.dk • www.swissdoor.dk

SWiSSDOOR
DØRTEKNIK FOR PROFESSIONELLE

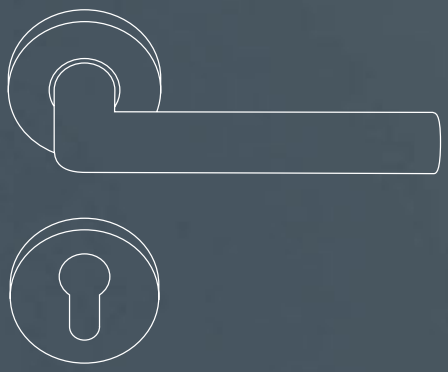

Handle Technology

Latching on to things.

Swissdoor ApS • Stenhuggervej 2 • 5471 Søndersø • Danmark Telefon +45 86 28 00 00 • mail@swissdoor.dk • www.swissdoor.dk

Comings and goings

The door handle (or door latch) is one of the most frequently used functional elements in the home: it's the very first object that people make contact with when they enter a building and it hardly ever comes to rest in busy places. But the door handle is much more than a mere functional element of household technology. A person's first physical perception of a house is made through the door handle – and as we all know, you only get one chance to leave a good first impression.

The tactile encounter with the handle is aesthetic and ergonomic at the same time. The first thing is "what the handle feels like" and this refers not only to its shape but also to its mechanical qualities when pressed. The high-quality bearings in the handle not only allow it to function for a long time, they also convey a feeling of quality. ECO Schulte underscores this by granting a five-year warranty on its handle range.

The ergonomic shape of the handle results mainly from its function. It must of course be possible to locate and operate it intuitively. A good grip and reliable power transfer have to be guaranteed, because considerable forces are required when opening a door if its form is to help prevent fingers from getting jammed or squeezed. In addition to this, a design that complies with standards also provides the highest possible level of functional security.

Swissdoor ApS • Stenhuggervej 2 • 5471 Søndersø • Danmark Telefon +45 86 28 00 00 • mail@swissdoor.dk • www.swissdoor.dk

Users and handles

European Standard **EN 1906** defines the utilization classes for door handle and handle systems. These classes depend on the intensity of use and level of care exercised by the users. ECO Schulte only offers handle systems in utilization categories 3 and 4.

Utilization Categories:

Class 1:

Moderate utilization frequency by persons motivated to exercise great care and from whom there is a low risk of improper use. Typical areas of application: interior doors of residential buildings.

Class 2:

Moderate utilization frequency by persons motivated to exercise care but from whom there is a certain risk of improper use. Typical areas of application: interior doors of office buildings.

Class 3:

High utilization frequency by the general public or other persons with low motivation to exercise care and from whom there is a high risk of improper use. Typical areas of application: interior doors of office buildings open to the general public.

Class 4:

For use in doors that are frequently subjected to violence or damage. Typical areas of application are football stadia, barracks or public toilets.

Timeless forms and classics

Even though door handles are subject to fashion trends, there are still a number of classics or even archetypes which can have an aesthetically striking effect on the first contact with a building. ECO Schulte focuses on timeless and functional classics in its product range. They are always available for profile frame doors too (OVR oval rosette handle) and as protective door handle sets. ECO Schulte also offers matching window handles.

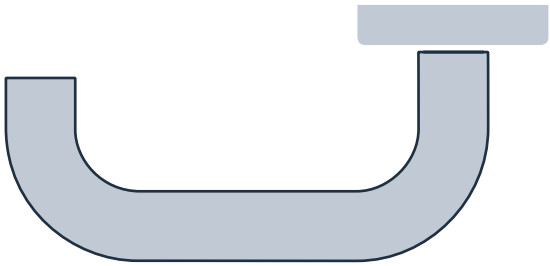

ECO D-110

ECO **D-100 Archetype: U-shaped handle**

A classic with value added: the advantage of the u-shaped handle lies in the second 90 degree bend. It was used traditionally to prevent people or material from getting "threaded on". The rear bend helps to prevent shopping bags or coat sleeves from getting caught in the handle. The u-shaped handle also has comfort qualities, because the rear turn supports the ball of the hand when opening the door. ECO Schulte has the u-shaped handle in its product range as factory design draft D-110.

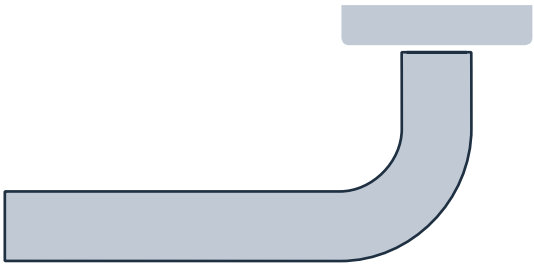

ECO D-210

ECO **D-200 Archetype: Frankfurt standard L-shape handle**

In their efforts to lower house construction prices and rents in the 1920s, many architects became involved with the standardization of construction components. The ECO D-200 is a variation of the draft that once made a name for itself as the Frankfurt standard handle where a round rod was bent to 90 degrees and positioned on a simple rosette. All of the Frankfurt versions are based on the idea of the right angle. ECO Schulte has included the Frankfurt standard handle in its product range in a high-quality modern interpretation as factory design draft D-210.

Swissdoor ApS • Stenhuggervej 2 • 5471 Søndersø • Danmark Telefon +45 86 28 00 00 • mail@swissdoor.dk • www.swissdoor.dk

ECO **D-300 Archetype: Frankfurt mitred handle**

The ECO D-300 is a variation of a geometric handle draft design from the 1920s which stands out through the legible simplicity of the construction: a circular tube is separated with a mitred cut before the two halves are joined together again at right angles. This handle was given the attribute "Frankfurt" not only through its close geometric relationship with the Frankfurt standard handle but also because it was used when the Frankfurt Architecture Museum was built. ECO Schulte has included its interpretation of the Frankfurt mitred handle in its product range as factory design draft D-310.

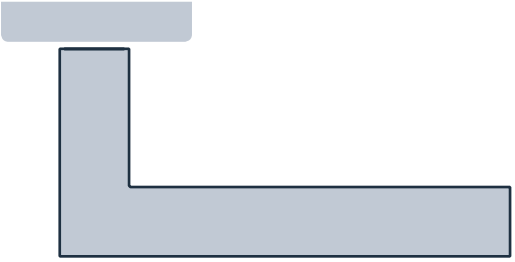

ECO D-310

ECO **D-400 Archetype: Ulm handle**

Made for getting to grips with! The archetype of this u-shaped handle was named after the Ulm School of Design where it was first used in the 1950s. The draft was based at the time on the door handles of the trains run by the Swiss railway. ECO Schulte reworked the Ulm handle with its own factory design version D-400.

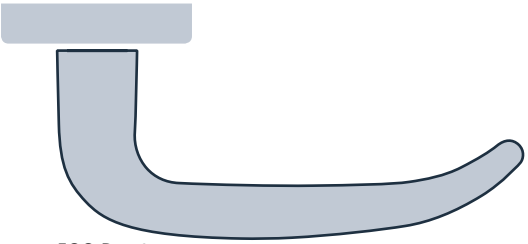

ECO D-410

ECO **D-500 Archetype: Hand-shape handle**

As far as the typology is concerned, this handle constitutes a connection between the Frankfurt mitred handle and the Ulm handle. The design of this factory design draft D-500 is discreet, easy to grip and orientated towards the direction of movement.

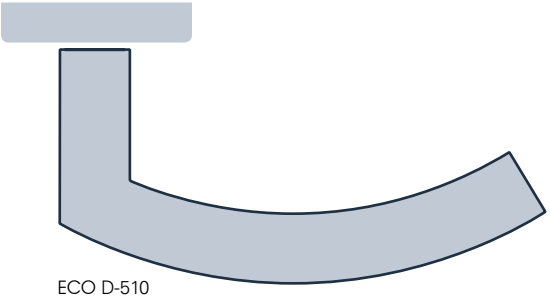

ECO D-510

Handles in all versions

Where form is concerned, ECO Schulte deliberately focuses its handle solutions on classic designs while ensuring at the same time that all areas of application can be served with the solutions on offer, from protective handles to window handles.

Rosette handles

The classic for apartment doors is the two-piece rosette handle which is available with a handle or a round or flat knob. The rosette that goes with it comes in warded lock, oval hole or profile cylinder versions.

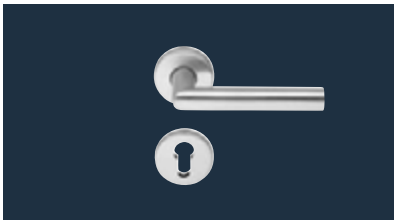

Oval rosette handles

Oval rosettes are used on profile frame doors made of steel, plastic or aluminium. They permit the mounting of the handle onto narrow frame profiles which conceal the risk of hand injuries, which is why the use of offset handles is recommended.

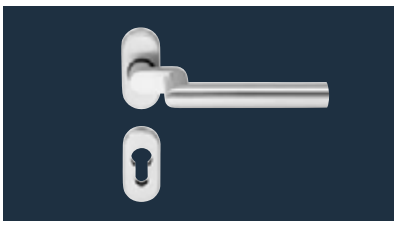

Long and short plate handles

With long and short plate handles, the handle and keyhole are covered by a single continuous plate. This combination provides additional hold for the handle handle on the door and additional screw attachment options. This makes these handles suitable for high levels of wear and tear, such as in schools.

Protective handles

Protective handles on exterior doors provide the prerequisites for break-in security. They are bolted through the door, thus providing good break-in protection. The standard **DIN 18257** splits protective handles into resistance classes from ES 0 to ES 3, whereby ES 3 covers protective handles which are extremely resistant to break-ins. Available with an optional cylinder protection system.

Window handles

ECO Schulte offers a range of window handles to match its programme of classical door handles. This guarantees that houses and apartments can be fitted out in a uniform form language in high-grade stainless steel with a satin surface.

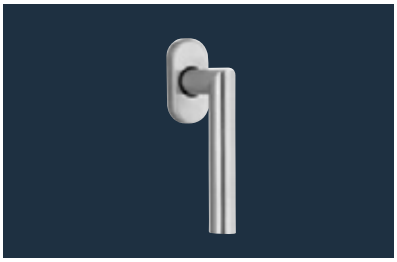

Swissdoor ApS • Stenhuggervej 2 • 5471 Søndersø • Danmark Telefon +45 86 28 00 00 • mail@swissdoor.dk • www.swissdoor.dk

Three materials on offer

The choice of the handle material is not only a question of aesthetics. Different materials are available, depending on hygiene requirements and the place and intensity of use.

High-grade stainless steel handles

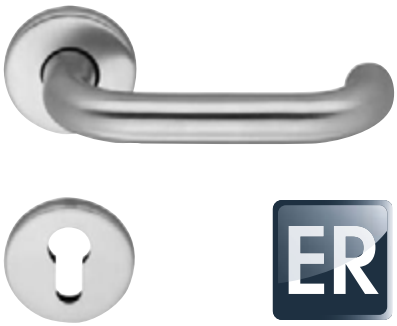

Stainless steel handles from ECO are distinguished by their wear resistancey and insensitive surface. Even when used intensively, stainless steel shows hardly any dents or scratches and is therefore recommended as the ideal material on frequently used doors (e.g. in public buildings, gastronomy businesses and sports facilities). Stainless steel handles are corrosion resistant, which makes them very well suited for outdoor areas. They do not require much care and are distinguished by their durability. Stainless steel is a hygienic material which can be disinfected and which inhibits the transfer of bacteria thanks to its smooth, non-porous surface, and this makes it very well suited for use in hospitals and medical and nursing practices.

Aluminium handles

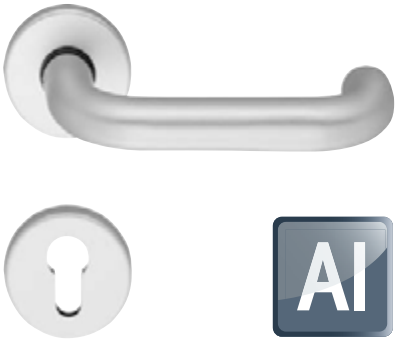

The ECO light alloy handle programme is distinguished by the quality of its surfaces. Because they are anodized, they are easy-care, lightfast and weather-proof. The advantages of the material lie in its low weight and outstanding malleability which open up virtually unlimited design possibilities. The typical ECO surface is additionally condensed through a sand-blasting process, thus giving it a particularly high level of toughness and durability.

Nylon handles

Used as basics, ECO handles made of high-quality nylon offer the option of setting colourful accents in architecture. A steel core is covered with polyamide, thus combining a pleasant feel with toughness and durability. ECO nylon handles are wearproof, colour and lightfast. The surfaces are harmless from a health and hygiene point of view, not susceptible to electrostatic charging and dimensionally stable in hot and cold temperatures. ECO shows a preference for clear forms in the plastic range too and offers a wide range of handles and accessories in addition to the door handles.

Good, better, best: Quality bearings with a system

Because people don't always treat doors gently, we have developed three different bearing technologies - all the way up to the high-class OKL version - to take this fact into account in all situations. ECO Schulte grants a five-year warranty on all handle products. And ECO Schulte doesn't make any compromises either where utilization categories are concerned. Our range consists exclusively of handle systems which comply with user categories 3 and 4, as defined by the standard.

OKL - Premium handles with ball-bearing technology

OKL Bearings
Industrial ball bearings are characteristic for these high-quality handles. A precise and maintenance-free, fully encapsulated grooved ball bearing ensures the well-balanced, play-free bearing mounting of the handle.

Free Movement
The movement of the handle is well adjusted and has a top-quality feeling to it. An integrated return torsion spring supports the lock's reset mechanism. A wave spring washer equalizes the axial play of the bearing.

Reliable Assembly
The screw attachments are covered by the cover rosette which is firmly connected to the base rosette once the handle has been bolted on. With ECO Schulte handles, the handle and rosette always form a solid unit. The stainless steel base rosette with support cams is firmly connected to the door with self-retaining screws. The door/handle connection is protected against turning out of position. Furthermore, it is fixed axially. This means that there is no accidental risk due to the loosening of the locking screws and detachment of the handle from the pinion square. The stainless steel handle hub is firmly welded to the stainless steel tube of the handle. The result of this technique is that the tested permanent load bearing capacity exceeds the requirements of the norm by the factor ten.

Quality/Standard
OKL handles have been subjected to more than two million test cycles by independent test institutes without any failures. They are certified in accordance with **EN 1906**, class 4 and have fire protection certification in line with **DIN 18273**.

Swissdoor ApS • Stenhuggervej 2 • 5471 Søndersø • Danmark Telefon +45 86 28 00 00 • mail@swissdoor.dk • www.swissdoor.dk

OGL - Handles with friction bearing technology

OGL Bearings

The maintenance-free plastic friction bearing is characteristic of these high-quality handles. The highly stable friction bearing floats in the base steel rosette and compensates the axial and radial forces. A wave washer spring compensates the angle tolerances between the pin and the support bracket of the base rosette.

Reliable Assembly

The screw attachments are concealed by the cover rosette which is firmly connected to the base rosette once the handle has been bolted on. With ECO Schulte handles, the handle and rosette always form a solid unit. The stainless steel base rosette with support cams is firmly connected to the door with self-retaining screws. The door/handle connection is protected against skewing on a fixed axle. This means that there is no accident risk due to the loosening of the locking screws and detachment of the handle from the pinion square. The stainless steel handle hub is firmly welded to the stainless steel tube of the handle and set to a torsional strength of 75 Nm.

Quality/Standard

OGL handles have been subjected to more than 200,000 user cycles by independent test institutes without any failures. They are certified in accordance with **EN 1906**, class 4 and have fire protection certification in line with **DIN 18273**.

SGL - Standard handles with friction bearing technol-

SGL Bearings

The base rosette made of reinforced plastic guides the axial movement of the handle. A wave washer spring compensates the angle tolerances between the pin and the support bracket of the base rosette.

Reliable Assembly

The screw attachments are concealed by the cover rosette which is firmly connected to the base rosette once the handle has been bolted on. With ECO Schulte handles, the handle and rosette always form a solid unit. The base rosette with support cams is firmly connected to the door with self-retaining screws. The door/handle connection is protected against skewing on a fixed axle. This means that there is no accident risk due to the loosening of the locking screws and detachment of the handle from the pinion square. The stainless steel handle hub is firmly welded to the stainless steel tube of the handle and set to a torsional strength of 75 Nm.

Quality/Standard

SGL handles have been subjected to more than 200,000 user cycles by independent test institutes without any failures. They are certified in accordance with **EN 1906**, class 3.

Handle technology ▪ Standard handles
Round rose handles (ROS) ▪ Handles on plate (L and K)

ER AI OKL OGL SGL

Round rose handle
D-110
Page 198

Round rose handle
D-120
Page 210

Round rose handle
D-190
Page 216

Round rose handle
D-210
Page 220

Round rose handle
D-310
Page 226

Round rose handle
D-330
Page 236

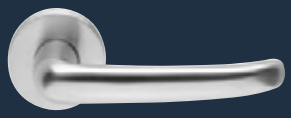

Round rose handle
D-410
Page 244

Round rose handle
D-490
Page 252

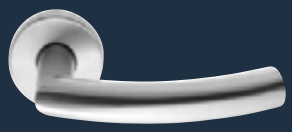

Round rose handle
D-510
Page 256

For the international identification of stainless steel see page 630.

Swissdoor ApS • Stenhuggervej 2 • 5471 Søndersø • Danmark Telefon +45 86 28 00 00 • mail@swissdoor.dk • www.swissdoor.dk

Handle technology ▪ Oval rose handles (OVR)

ER AI

OGL

Oval rose handle
D-115
Page 264

Oval rose handle
D-116
Page 268

Oval rose handle
D-310
Page 272

Oval rose handle
D-315
Page 276

Oval rose handle
D-335
Page 280

Oval rose handle
D-410
Page 284

Oval rose handle
D-415
Page 288

Oval rose handle
D-515
Page 292

For the international identification of stainless steel see page 630.

Handle technology ▪ Security handle sets

ER AI OGL

Security handle
D-110
Page 298

Security handle
D-111
Page 308

Security handle
D-310
Page 312

Security handle
D-116
Page 320

Security handle
D-315
Page 324

For the international identification of stainless steel see page 630.

Swissdoor ApS • Stenhuggervej 2 • 5471 Søndersø • Danmark Telefon +45 86 28 00 00 • mail@swissdoor.dk • www.swissdoor.dk

Accessories

Window handles

F-110 Page 328
F-120 Page 328
F-210 Page 328
F-310 Page 328
F-410 Page 328

Knobs

K-130 Page 330
K-135 Page 330
K-165 Page 330

Security roses

Short plates Page 331
Roses Page 331
Security roses set PZ ER Page 331
Security roses set ZA ER Page 331
Security roses set PZ AL Page 332
Security roses set ZA AL Page 332
Security roses set ZA AL square Page 332
Security roses set ZA AL two-parted Page 332

Door stop

Door stop BS 44 Page 333
Door stop BS 45 Page 333
Door stop BS 65 Page 333
Door stop for walls WS 46 Page 333
Door stop for walls WS 76 Page 333

Push-pull handles

Push-pull handle straight Page 334
Push-pull handle cranked Page 334
Push-pull handle triangular Page 334
Push-pull handle semi-circular Page 334
Fixing solution for push pull handles Page 335

Spindles

Spindle for standard handles Page 336
Spindle with offset drilling Page 337
Spreaded spindle Page 338
Panic pin Page 339
Spindle for knob / lever sets Page 340
Spindle for knob / lever sets with offset drilling Page 341

Sets of back plates

Set of back plate with PZ-hole Page 342
Set of back plate with BB-hole Page 342
Set of back plate UG (blind) Page 342
WC-set Page 342
Spindle with clamp Page 342

Accessories

Pop rivet nut for oval rose counter handles Page 343
Set of screws for levers on plate Page 343
Set of screws for levers on rose Page 343
Accessories-Set BB-insert Page 343

Sleeves

Sleeve nut Page 344
Adjustment sleeves Page 344

Drilling templates

Drilling template with centering pin for interior doors Page 345
Drilling template with centering pin for interior doors and fire-protection handle sets Page 345
Drilling template with centering pin for security handle sets Page 345

For the international identification of stainless steel see page 630.

SWiSSDOOR
DØRTEKNIK FOR PROFESSIONELLE

ECO **D-110**

Swissdoor ApS • Stenhuggervej 2 • 5471 Søndersø • Danmark Telefon +45 86 28 00 00 • mail@swissdoor.dk • www.swissdoor.dk

ECO **ROUND ROSE HANDLES · D-110**

EN 1906 | EN 179 | F

ECO

Product characteristics

Tested acc. to	EN 1906
With 9 mm spindle tested Fire-protection tested	F
Lever form for escape doors and emergency exits	EN 179
Restoring spring	■
Fixable bearing	■
Steel base with positioning studs	■
Concealed through-screw technology	■
DIN left / right	■

■ Yes - No ◘ Option

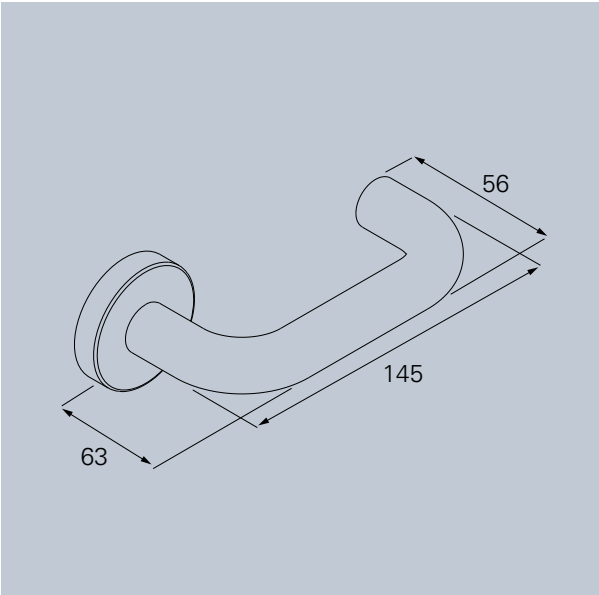

OKL
OGL
SGL

Material:

ER Stainless steel
Al Aluminium
Ku Nylon

3

PRODUCT FAMILY D-100

Standard handle

D-110 . Page 198

D-120 . Page 210

D-190 . Page 216

Handle on plate

D-110 . Page 201, 207

D-110 . Page 204

Oval rose handle

D-115 . Page 264

D-116 . Page 268

Security handle

D-110 . Page 298

D-111 . Page 308

D-116 . Page 320

Window handle

F-110 . Page 328

D-110 Round rose handle

OKL

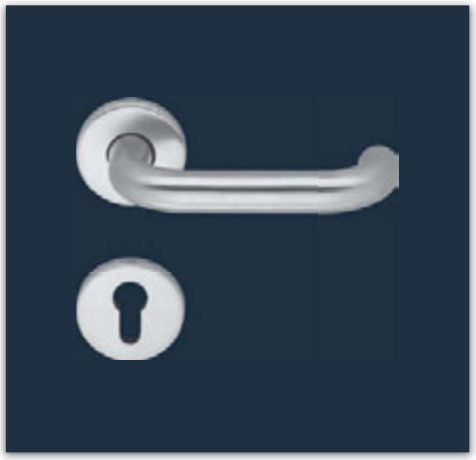

D-110 Round rose handle with OKL – ball-bearing technology

Lever guidance consists of a closed, maintenance-free ball bearing. Fixable bearing with restoring spring, DIN left / DIN right useable. Stainless steel base with positioning studs. Concealed, continous screw connection.

User category: class 4

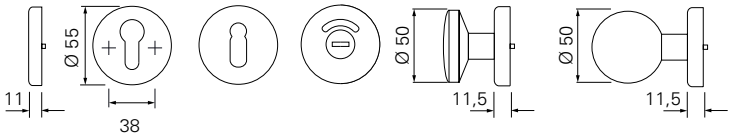

PZ	BB	WC	WSG K-130	WSG K-165
FS-PZ F		SK	FS-WSG K-130 F	FS-WSG K-165 F

OKL – ROUND ROSE HANDLE

ER

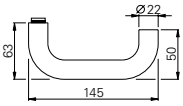

EN 1906 EN 179 F

OKL

	∅	⧄	Kit sets				
S	22 mm	8 mm	153005.46	153000.46	153015.46	153016.46	153020.46
F	22 mm	9 mm	353005.46		353015.46	353018.46	

Finish: stainless steel matt. PVD and polished on request.

Swissdoor ApS • Stenhuggervej 2 • 5471 Søndersø • Danmark Telefon +45 86 28 00 00 • mail@swissdoor.dk • www.swissdoor.dk

D-110 Long plate handle (L)

OKL

D-110 Long plate handle (L) with OKL – ball-bearing technology

The lever is clenched inside the inner ring of the ball-bearing. The outer ring of the ball-bearing is fixed into the base construction. This connection guarantees an additional lasting of the lever sets on the door leafs and is known for high capacity in axial and radial direction.

User category: class 4

PZ 92 on request

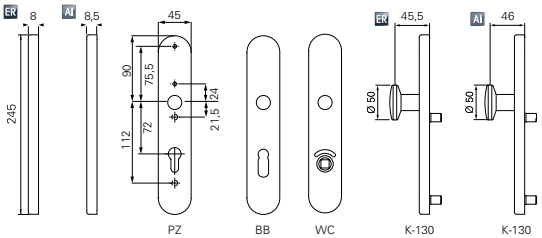

OKL – LONG PLATE HANDLE

ER

EN 1906 EN 179 F

OKL

	∅	⧄	Kit sets			
S	22 mm	8 mm	1k6505.46	1k6500.46	1k6515.46	1k6520.46
F	22 mm	9 mm	3k6505.46		3k6515.46	

Finish: Stainless steel matt.

AI

EN 1906 EN 179 F

OKL

	∅	⧄	Kit sets			
S	22 mm	8 mm	1k7505.30	1k7500.30	1k7515.30	1k7520.30
F	22 mm	9 mm	3k7505.30		3k7515.30	

Finish: Aluminium anodised, further colours on request.

For door thickness 38 – 45 mm. Fire-proof lever sets for door thickness 40 – 65 mm. Please advise door thickness when ordering.

D-110 Round rose handle

OGL

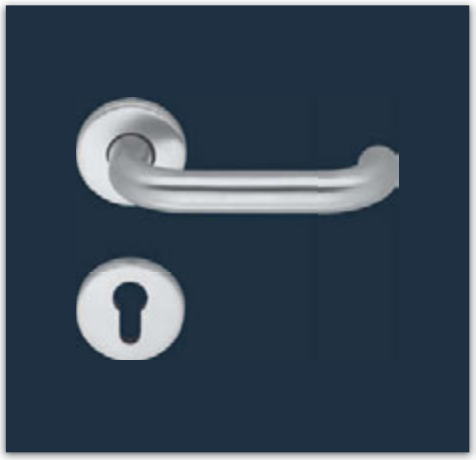

D-110 Round rose handle
with OGL – friction bearing technology
Lever guidance consists of a closed, maintenance-free friction bearing with self-lubricating plastic. Fixable bearing. DIN left / DIN right useable. Steel base with positioning studs. Concealed, continous screw connection.

User category: class 4

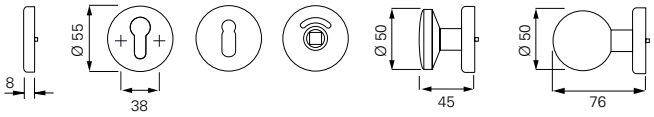

PZ FS-PZ F	BB	WC AV	WSG K-130 FS-WSG K-130 F	WSG K-165 FS-WSG K-165 F

OGL – ROUND ROSE HANDLE

ER

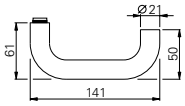

EN 1906 EN 179 F

OGL

	∅	⧄		Kit sets						Passive leaf	
S	21 mm	8 mm		156505.46	156500.46	156510.46	156580.46	156520.46			
F	21 mm	9 mm	356181.46	356100.46		356200.46	356270.46		356105.46	356318.46	356317.46
	21 mm	9 mm		356150.46							

Finish: Stainless steel matt. PVD and polished on request.

AI

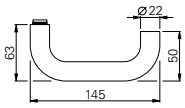

EN 1906 EN 179 F

OGL

	∅	⧄		Kit sets					Passive leaf	
S	22 mm	8 mm		157505.30	157500.30	157510.30	157520.30			
F	22 mm	9 mm	317230.30	357100.30		357200.30		357104.30	357318.30	357317.30
	22 mm	9 mm		357150.30						

Finish: Aluminium anodised, further colours on request.

For door thickness 38 – 45 mm. Fire-proof lever sets for door thickness 40 – 65 mm. Please advise door thickness when ordering.

Swissdoor ApS • Stenhuggervej 2 • 5471 Søndersø • Danmark Telefon +45 86 28 00 00 • mail@swissdoor.dk • www.swissdoor.dk

ECO **ROUND ROSE HANDLES· D-110**

EN 1906 | EN 179 | F

ECO

OGL – ROUND ROSE HANDLE

Ku

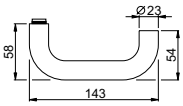

EN 1906 | EN 179 | F

OGL

	∅	⧄		Kit sets					Passive leaf	FS-Knob
S	23 mm	8 mm		154655	154650	154660	154670			
F	23 mm	9 mm	114300	354100		354200		354105	354317	361160
	23 mm	9 mm		354150						

Material: Nylon PA · Finish shiny
Note: lever with steel core. Corresponding drilling template available, art.no: 930317

Black | Dark grey | White | Red | Blue | Further colours on request

Ku

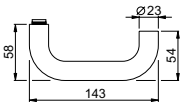

EN 1906 | EN 179 | F

OGL

	∅	⧄	Kit sets			Passive leaf
F	23 mm	9 mm	354600.02	354700.02	354604.02	354617.02

Material: Nylon · PPN black
Note: lever with steel core. User category class 3.Corresponding drilling template available, art.no: 930317

Ku

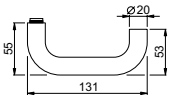

OGL

	∅	⧄	Kit sets		
S	20 mm	8 mm	150651	150660	150670

Material: nylon Finish: shiny
Note: nylon base with positioning studs. Lever with steel core. Rose diametre 52 mm. Delivery with 7 mm spindle or 8,5 mm spindle on request. Lever with steel core. User category class 3. Corresponding drilling template available, art.no: 930317

Black | Dark grey | White | Red | Blue | Further colours on request

3

For door thickness 38 – 45 mm. Fire-proof lever sets for door thickness 40 – 65 mm. Please advise door thickness when ordering.

D-110 Short plate handle (K)

D-110 Short plate handle (K) with OGL– friction bearing technology

Lever guidance consists of a closed, maintenance-free friction bearing with self-lubricating plastic. Fixable bearing. DIN left / DIN right useable. Steel base with positioning studs. Concealed, continous screw connection.

User category: class 4

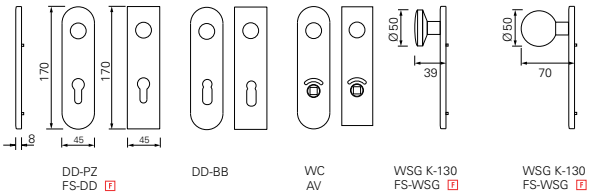

OGL - SHORT PLATE HANDLE (K)

ER

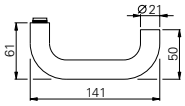

EN 1906 EN 179 F

OGL	∅	⧄		Kit sets						Passive leaf	
S	21 mm	8 mm		106505.46	106500.46	106510.46	106560.46	106520.46			
F	21 mm	9 mm	306081.46	306100.46		306200.46	306263.46		306125.46	306319.46	306317.46
	21 mm	9 mm		306150.46							

Finish: Stainless steel matt. PVD and polished on request.

AI

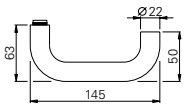

EN 1906 EN 179 F

OGL	∅	⧄			Kit sets					Passive leaf	
S	22 mm	8 mm			107505.30	107500.30	107510.30	107520.30			
F	22 mm	9 mm	307081.30	307083.30	307100.30		307200.30		307104.30	307318.30	307317.30
	22 mm	9 mm			307150.30						

Finish: Aluminium anodised, further colours on request.

For door thickness 38 – 45 mm. Fire-proof lever sets for door thickness 40 – 65 mm. Please advise door thickness when ordering.

Swissdoor ApS • Stenhuggervej 2 • 5471 Søndersø • Danmark Telefon +45 86 28 00 00 • mail@swissdoor.dk • www.swissdoor.dk

OGL - SHORT PLATE HANDLE (K)

Al

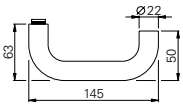

EN 1906 EN 179 F

OGL

	∅	⧄			Kit sets					Passive leaf	
S	22 mm	8 mm			147505.30	147500.30	147510.30	147520.30			
F	22 mm	9 mm	347081.30	347083.30	347100.30		347200.30		347125.30	347318.30	347317.30
	22 mm	9 mm			347150.30						

Finish: Aluminium anodised, further colours on request.

Ku

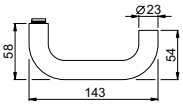

EN 1906 EN 179 F

OGL

	∅	⧄			Kit sets			Passive leaf		Fire-proof knob K-130 on plate	
F	23 mm	9 mm			319601.02	319701.02	319603.02	319605.02	319604.02	324276.02	120473.02
	23 mm	9 mm	319601.02	319603.02	319602.02						

Material: Nylon PPN black Finish: matt
Lever guidance deep-drawn 6 mm. Lever with steel core. User category class 3.
Corresponding drilling template available, art.no: 930317

Ku

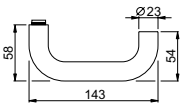

EN 1906 EN 179 F

OGL

	∅	⧄			Kit sets			Passive leaf		Fire-proof knob K-130 on plate	
F	23 mm	9 mm	313600.02	313808.02	313600.02	313700.02	313601.02	313618.02	313617.02	333750.02	324022.03
	23 mm	9 mm			313650.02						

Material: Nylon black Finish: matt with polished edge
Lever guidance deep-drawn 6 mm. Lever with steel core. User category class 3.
Corresponding drilling template available, art.no: 930317

ECO **HANDLES ON PLATE · D-110**

EN 1906 | EN 179 | F

OGL - SHORT PLATE HANDLE (K)

Ku

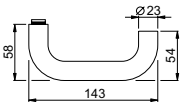

EN 1906 | EN 179 | F

OGL

	∅	⧄	Kit sets					Passive leaf	FS handle on plate	
S	23 mm	8 mm	104505	104500	104510	104520				
F	23 mm	9 mm	304100		304200		304108	304317	324040	324042
	23 mm	9 mm	304150							

Material: Nylon PPN black Finish: matt
Lever guidance deep-drawn 6 mm. Lever with steel core. User category class 3.
Corresponding drilling template available, art.no: 930317.

Black | Dark grey | White | Red | Blue | Further colours on request

Ku

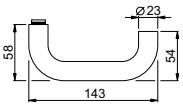

EN 1906 | EN 179 | F

OGL

	∅	⧄	FS counter handle		FS handle on plate		Kit sets			Passive leaf
F	23 mm	9 mm	304600.02	314201.02	344034.02	324033.02	304600.02	304700.02	304601.02	304617.02
	23 mm	9 mm					304650.02			

Material: Nylon black Finish: shiny
Note: lever guidance deep-drawn 6 mm. Lever with steel core. Corresponding drilling template available, art.no: 930317

For door thickness 38 – 45 mm. Fire-proof lever sets for door thickness 40 – 65 mm. Please advise door thickness when ordering.

Swissdoor ApS • Stenhuggervej 2 • 5471 Søndersø • Danmark Telefon +45 86 28 00 00 • mail@swissdoor.dk • www.swissdoor.dk

D-110 Long plate handle (L)

OGL

D-110 Long plate handle (L)
with OGL – friction bearing technology
Lever guidance consists of a closed, maintenance-free friction bearing with self-lubricating plastic. Fixable bearing. DIN left / DIN right useable. Steel base with positioning studs. Concealed, continous screw connection.

User category: class 4, PZ 92 on request

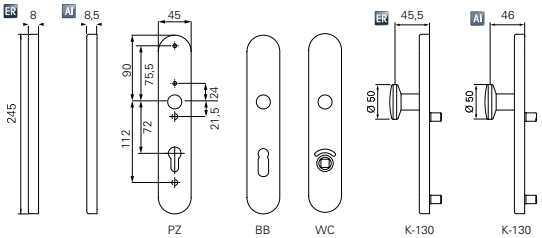

OGL – LONG PLATE HANDLE (L)

ER

EN 1906 EN 179 F

OGL	∅	⧄	Kit sets			
S	22 mm	8 mm	1g6505.46	1g6500.46	1g6515.46	1g6520.46
F	22 mm	9 mm	3g6505.46		3g6515.46	

Finish: Stainless steel matt

AI

EN 1906 EN 179 F

OGL	∅	⧄	Kit sets			
S	22 mm	8 mm	1g7505.30	1g7500.30	1g7515.30	1g7520.30
F	22 mm	9 mm	3g7505.30		3g7515.30	

Finish: Aluminium anodised, further colours on request.

3

For door thickness 38 – 45 mm. Fire-proof lever sets for door thickness 40 – 65 mm. Please advise door thickness when ordering.

D-110 Round rose handle

SGL

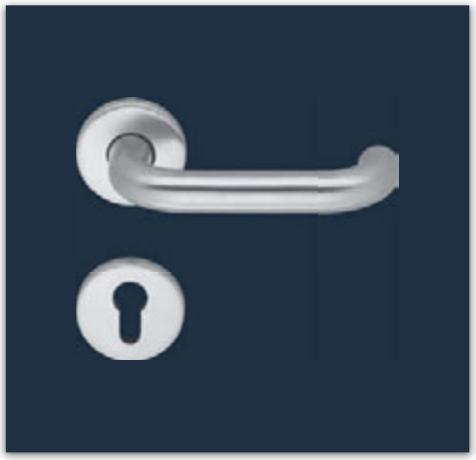

D-110 Round rose handle with SGL – Standard handles with friction bearing technology

Lever guidance in maintenance-free friction bearing with adjustment function integrated in nylon base rose. With spring support. Lever with fixable bearing, nylon base with positioning studs. DIN left / DIN right useable. Concealed, continous screw connection.

User category: class 3

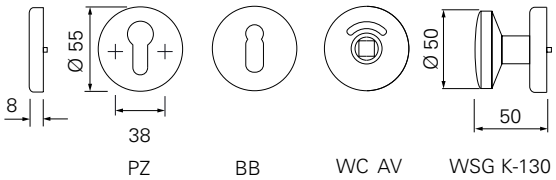

SGL – ROUND ROSE HANDLE

ER

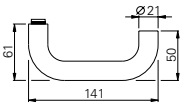

EN 1906

SGL

	∅	⧄	Kit sets			
S	21 mm	8 mm	152505.46	152500.46	152515.46	152520.46

Finish: Stainless steel matt. PVD and polished on request.

AI

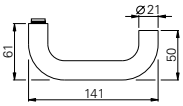

EN 1906

SGL

	∅	⧄	Kit sets			
S	21 mm	8 mm	152505.30	152500.30	152515.30	152520.30

Finish: Aluminium anodised, further colours on request.

For door thickness 38 – 45 mm. Fire-proof lever sets for door thickness 40 – 65 mm. Please advise door thickness when ordering.

Swissdoor ApS • Stenhuggervej 2 • 5471 Søndersø • Danmark Telefon +45 86 28 00 00 • mail@swissdoor.dk • www.swissdoor.dk

SWISSDOOR
DØRTEKNIK FOR PROFESSIONELLE

ECO **D-100**
The U-shaped handle

A classic with value added: the advantage of the U-shaped handle lies in the second 90 degree bend. It was used traditionally to prevent people or material from getting "threaded on". The rear bend helps to prevent shopping bags or coat sleeves from getting caught in the handle.

The U-shaped handle also has comfort qualities, because the rear turn supports the ball of the hand when opening the door.

ECO Schulte has the U-shaped handle in its product range as factory design draft D-110

Swissdoor ApS • Stenhuggervej 2 • 5471 Søndersø • Danmark Telefon +45 86 28 00 00 • mail@swissdoor.dk • www.swissdoor.dk

SWISSDOOR
DØRTEKNIK FOR PROFESSIONELLE

ECO **D-120**

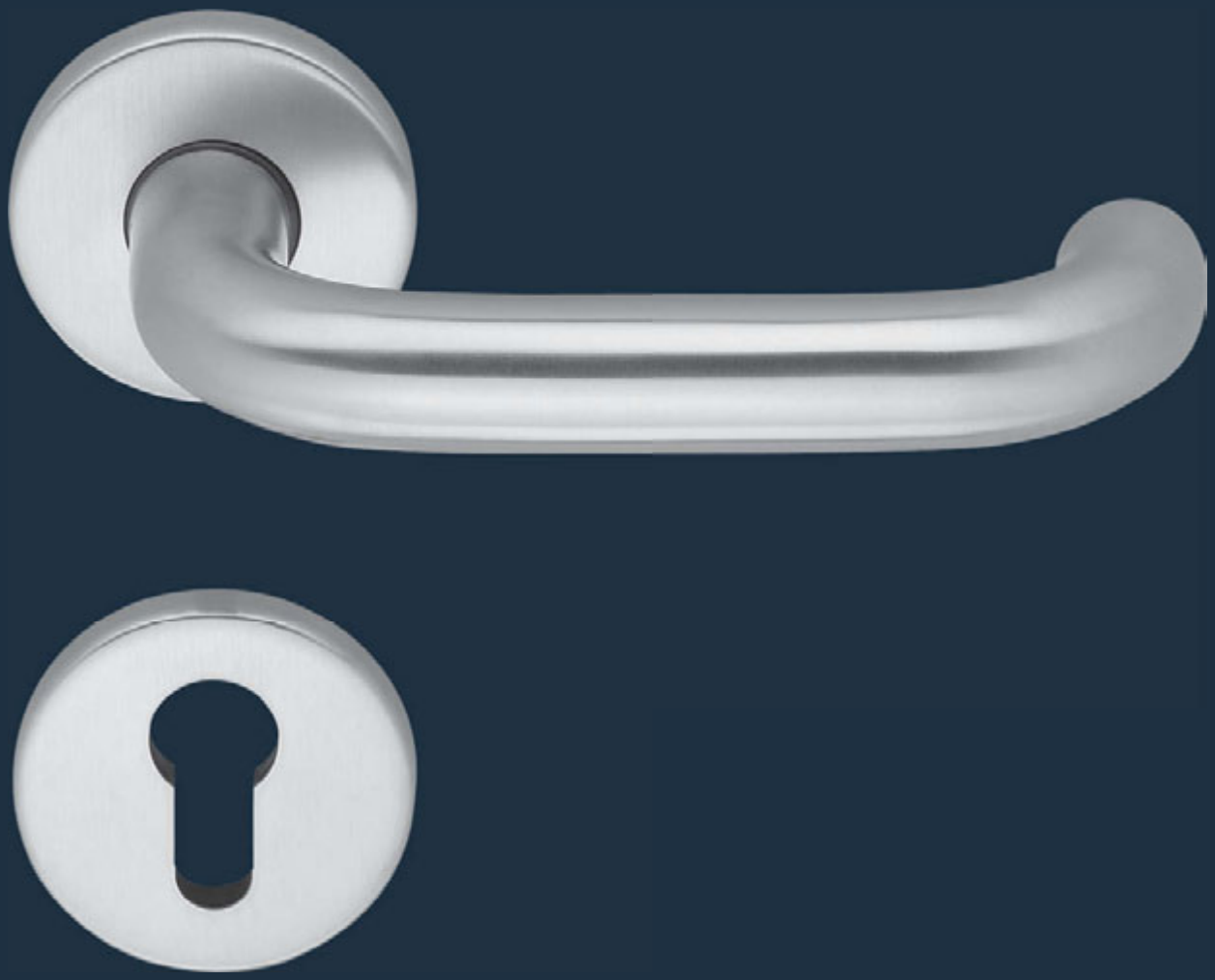

Swissdoor ApS • Stenhuggervej 2 • 5471 Søndersø • Danmark Telefon +45 86 28 00 00 • mail@swissdoor.dk • www.swissdoor.dk

ECO **ROUND ROSE HANDLES · D-120**

EN 179 EN 1906 F

ECO

Product characteristics

Tested acc. to	EN 1906
With 9 mm spindle tested Fire-protection tested	F
Lever form for escape doors and emergency exits	EN 179
Restoring spring	■
Fixable bearing	■
Steel base with positioning studs	■
Concealed through-screw technology	■
DIN left / right	■

■ Yes - No ◘ Option

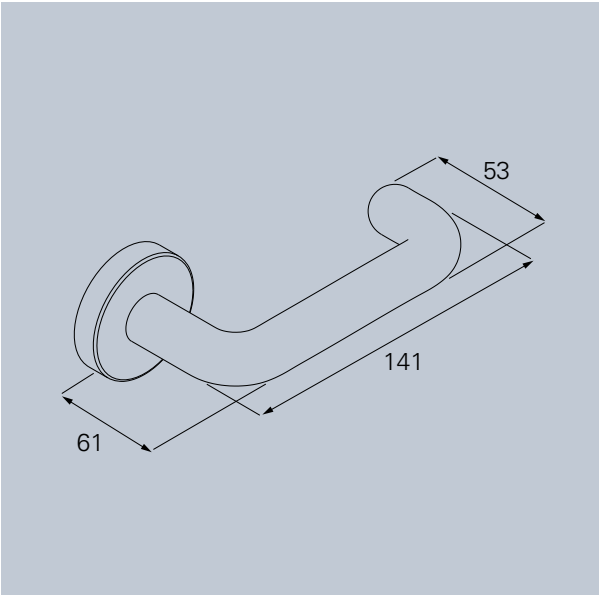

OGL
SGL

Material:

ER Stainless steel

3

PRODUCT FAMILY D-100

Standard handle

D-110 . Page 211

D-120 . Page 211

D-190 . Page 211

Handle on plate

D-110 . Page 201, 207

D-110 . Page 211

Oval rose handle

D-115 . Page 211

D-116 . Page 211

Security handle

D-110 . Page 211

D-111 . Page 211

D-116 . Page 211

Window handle

F-110 . Page 328

D-120 Round rose handle

OGL

D-120 Round rose handle with OGL – friction bearing technology

Lever guidance consists of a closed, maintenance-free friction bearing with self-lubricating plastic. Fixable bearing. DIN left / DIN right useable. Steel base with positioning studs. Concealed, continous screw connection.

User category: class 4

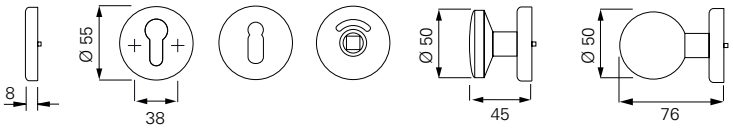

PZ FS-PZ F	BB	WC AV	WSG K-130 FS-WSG K-130 F	WSG K-165 FS-WSG K-165 F

OGL – ROUND ROSE HANDLE

ER

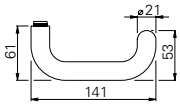

EN 179 EN 1906 F

OGL

	∅	⧄		Kit sets						Passive leaf	
S	21 mm	8 mm		156a05.46	156a00.46	156a10.46	156a80.46	156a20.46			
F	21 mm	9 mm	316840.46	356a05.46		356a60.46	356a82.46		356a25.46	356a18.46	356a17.46
	21 mm	9 mm		356a50.46							

Finish: Stainless steel matt. PVD and polished on request.

Swissdoor ApS • Stenhuggervej 2 • 5471 Søndersø • Danmark Telefon +45 86 28 00 00 • mail@swissdoor.dk • www.swissdoor.dk

D-120 Short plate handle (K)

OGL

D-120 Short plate handle (K)
with OGL – friction bearing technology
Lever guidance consists of a closed, maintenance-free friction bearing with self-lubricating plastic. Fixable bearing. DIN left / DIN right useable. Steel base with positioning studs. Concealed, continous screw connection.

User category: class 4

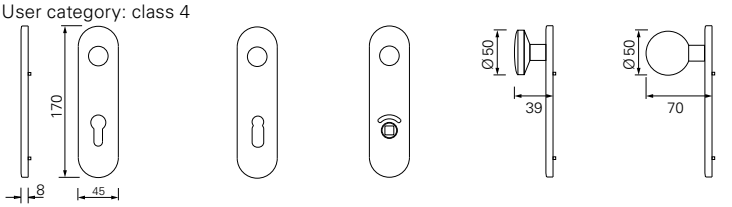

DD-PZ FS-DD F | DD-BB | WC AV | WSG K-130 FS-WSG F | WSG K-130 FS-WSG F

OGL – SHORT PLATE HANDLE (K)

ER

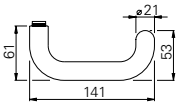

EN 179 EN 1906 F

OGL	∅	⧄		Kit sets						Passive leaf	
S	21 mm	8 mm		106a05.46	106a00.46	106a10.46	106a60.46	106a20.46			
F	21 mm	9 mm	306a81.46	306a00.46		306a60.46	306a63.46		306a25.46	306a18.46	306a17.46
	21 mm	9 mm		306a50.46							

Finish: Stainless steel matt. PVD and polished on request.

3

For door thickness 38 – 45 mm. Fire-proof lever sets for door thickness 40 – 65 mm. Please advise door thickness when ordering.

D-120 Round rose handle

SGL

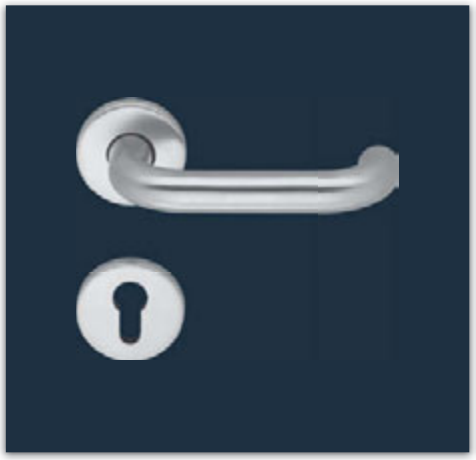

D-120 Round rose handle with SGL – Standard handles with friction bearing technology

Lever guidance in maintenance-free friction bearing with adjustment function integrated in nylon base rose. With spring support. Lever with fixable bearing, nylon base with positioning studs. DIN left / DIN right useable. Concealed, continous screw connection.

User category: class 3

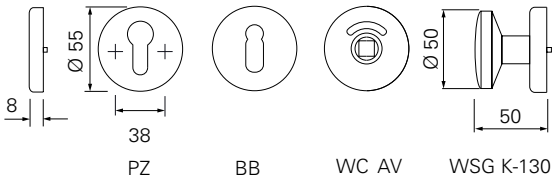

SGL – ROUND ROSE HANDLE

ER

SGL

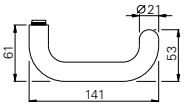

EN 1906

SGL	∅	⧄	Kit sets			
S	21 mm	8 mm	152506.46	152501.46	152516.46	152521.46

Finish: Stainless steel matt. PVD and polished on request.

For door thickness 38 – 45 mm. Fire-proof lever sets for door thickness 40 – 65 mm. Please advise door thickness when ordering.

Swissdoor ApS • Stenhuggervej 2 • 5471 Søndersø • Danmark Telefon +45 86 28 00 00 • mail@swissdoor.dk • www.swissdoor.dk

SWISSDOOR
DØRTEKNIK FOR PROFESSIONELLE

CentrO, Oberhausen,
Germany

ECO handle technology
Timeless forms

Even though door handles are subject to fashion trends, there are still a number of classics or even archetypes which can have an aesthetically striking effect on the first contact with a building.

ECO Schulte focuses on timeless and functional classics in its product range. They are always available for profile frame doors too (OVR oval rosette handle) and as protective door handle sets. ECO Schulte also offers matching window handles.

Swissdoor ApS • Stenhuggervej 2 • 5471 Søndersø • Danmark Telefon +45 86 28 00 00 • mail@swissdoor.dk • www.swissdoor.dk

ECO **D-190**

Swissdoor ApS • Stenhuggervej 2 • 5471 Søndersø • Danmark Telefon +45 86 28 00 00 • mail@swissdoor.dk • www.swissdoor.dk

ECO **ROUND ROSE HANDLES · D-190**

EN 1906 | EN 179 | F

ECO

Product characteristics

Tested acc. to	EN 1906
With 9 mm spindle tested Fire-protection tested	F
Lever form for escape doors and emergency exits	EN 179
Restoring spring	■
Fixable bearing	■
Steel base with positioning studs	■
Concealed through-screw technology	■
DIN left / right	■

■ Yes - No ◘ Option

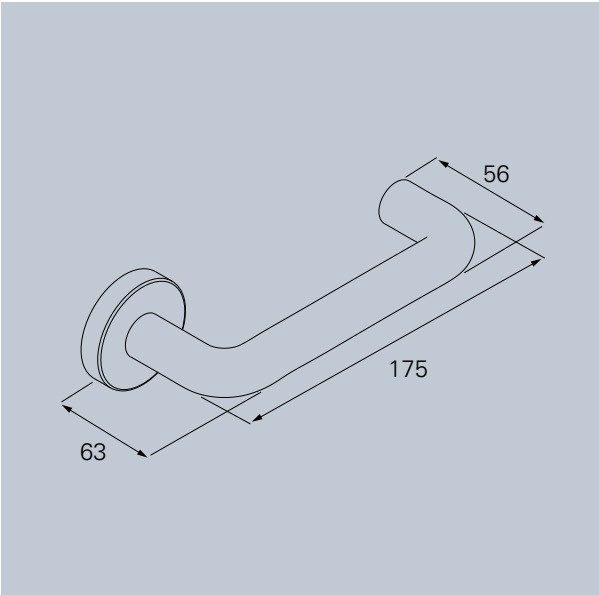

OKL

Material:

ER Stainless steel

3

PRODUCT FAMILY D-100

Standard handle

D-110 . Page 198

D-120 . Page 210

D-190 . Page 216

Handle on plate

D-110 . Page 201, 207

D-110 . Page 204

Oval rose handle

D-115 . Page 264

D-116 . Page 268

Security handle

D-110 . Page 298

D-111 . Page 308

D-116 . Page 320

Window handle

F-110 . Page 328

D-190 Round rose handle

OKL

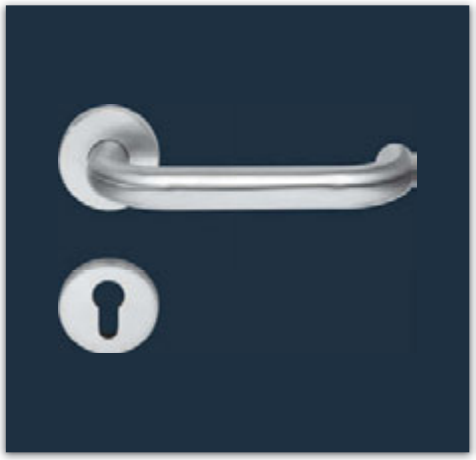

D-190 Round rose handle with OKL – ball-bearing technology

Lever guidance consists of a closed, maintenance-free ball bearing. Fixable bearing with restoring spring, DIN left / DIN right useable. Stainless steel base with positioning studs. Concealed, continuous screw connection.

User category: class 4

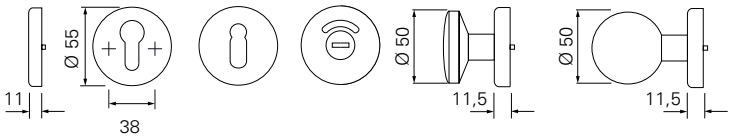

PZ FS-PZ F	BB	WC SK	WSG K-130 FS-WSG K-130 F	WSG K-165 FS-WSG K-165 F

OKL - ROUND ROSE HANDLE

ER

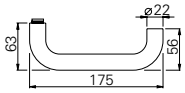

EN 1906 EN 179 F

OKL

	∅	⧄	Kit sets				
S	22 mm	8 mm	153805.46	153800.46	153815.46	153816.46	153820.46
F	22 mm	9 mm	353805.46		353815.46	353818.46	

Finish: Stainless steel matt. PVD and polished on request.

For door thickness 38 – 45 mm. Fire-proof lever sets for door thickness 40 – 65 mm. Please advise door thickness when ordering.

SWiSSDOOR
DØRTEKNIK FOR PROFESSIONELLE

ECO **D-100**
Extra long U-shaped handle

A classic with value added: the advantage of the U-shaped handle lies in the second 90 degree bend. It was used traditionally to prevent people or material from getting "threaded on". The rear bend helps to prevent shopping bags or coat sleeves from getting caught in the handle.

The U-shaped handle also has comfort qualities, because the rear turn supports the ball of the hand when opening the door.

ECO Schulte has the U-shaped handle in its product range as factory design draft D-190.

Swissdoor ApS • Stenhuggervej 2 • 5471 Søndersø • Danmark Telefon +45 86 28 00 00 • mail@swissdoor.dk • www.swissdoor.dk

ECO **D-210**

Swissdoor ApS • Stenhuggervej 2 • 5471 Søndersø • Danmark Telefon +45 86 28 00 00 • mail@swissdoor.dk • www.swissdoor.dk

ECO **ROUND ROSE HANDLES · D-210**

EN 1906 F

ECO

Product characteristics

Tested acc. to	EN 1906
With 9 mm spindle tested Fire-protection tested	F
Lever form for escape doors and emergency exits	–
Restoring spring	■
Fixable bearing	■
Steel base with positioning studs	■
Concealed through-screw technology	■
DIN left / right	■

■ Yes - No ◘ Option

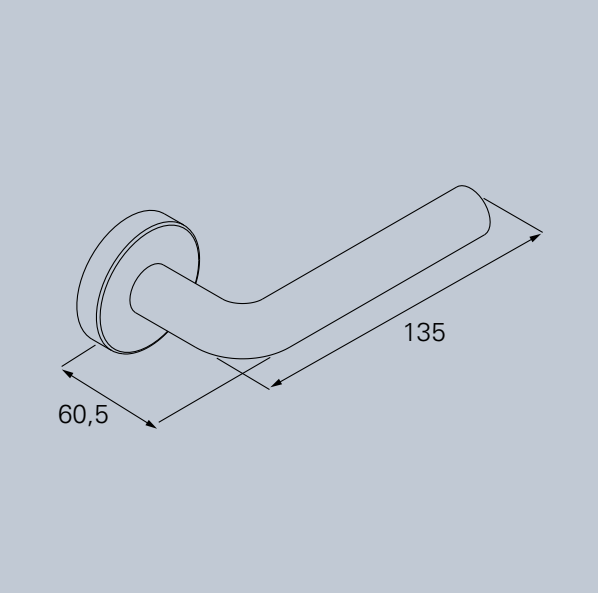

OGL
SGL

Material:

ER Stainless steel

Al Aluminium

3

PRODUCT FAMILY D-200

Standard handle	Handle on plate	Window handle
D-210 . Page 221	D-210 . Page 223	F-210 . Page 328

D-210 Round rose handle

OGL

D-210 Round rose handle with OGL – friction bearing technology

Lever guidance consists of a closed, maintenance-free friction bearing with self-lubricating plastic. Available with fixed knob or turnable know and powerful locking (spring support).
Bore diametre of Ø 23 mm at the lever collar necessary.

User category: class 4

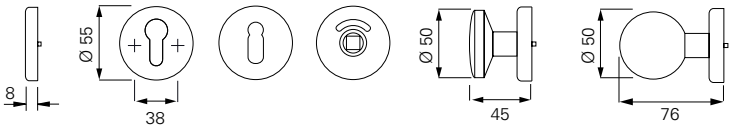

PZ FS-PZ F	BB	WC AV	WSG K-130 FS-WSG K-130 F	WSG K-165 FS-WSG K-165 F

OGL – ROUND ROSE HANDLE

ER

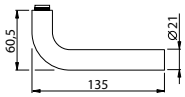

EN 1906 F

OGL

	∅	⧄		Kit sets						Passive leaf	
S	21 mm	8 mm		156605.46	156600.46	156610.46	156680.46	156620.46			
F	21 mm	9 mm	316811.46	356600.46		356660.46	356682.46		356605.46	356618.46	356617.46

Finish: Stainless steel matt. PVD and polished on request.

AI

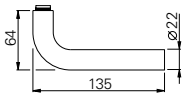

EN 1906 F

OGL

	∅	⧄		Kit sets					Passive leaf	
S	22 mm	8 mm		157605.30	157600.30	157610.30	157620.30			
F	22 mm	9 mm	317224.30	357600.30		357660.30		357604.30	357618.30	357617.30

Finish: Aluminium anodised, further colours on request.

For door thickness 38 – 45 mm. Fire-proof lever sets for door thickness 40 – 65 mm. Please advise door thickness when ordering.

Swissdoor ApS • Stenhuggervej 2 • 5471 Søndersø • Danmark Telefon +45 86 28 00 00 • mail@swissdoor.dk • www.swissdoor.dk

D-210 Short plate handle (K)

OGL

D-210 Short plate handle (K)
with OGL – friction bearing technology
Lever guidance consists of a closed, maintenance-free friction bearing with self-lubricating plastic. Available with fixed knob or turnable know and powerful locking (spring support).
Bore diametre of Ø 23 mm at the lever collar necessary.
User category: class 4

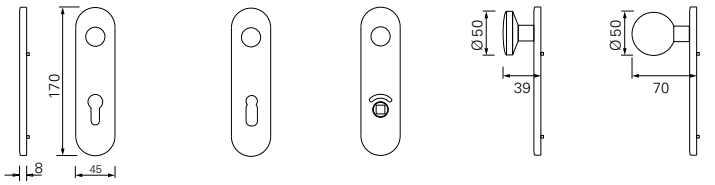

DD-PZ FS-DD F | DD-BB | WC AV | WSG K-130 FS-WSG F | WSG K-130 FS-WSG F

OGL – SHORT PLATE HANDLE (K)

ER

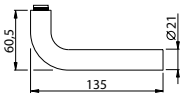

EN 1906 F

OGL	∅	⧄		Kit sets						Passive leaf	
S	21 mm	8 mm		106605.46	106600.46	106610.46	106660.46	106620.46			
F	21 mm	9 mm	306681.46	306600.46		306660.46	306663.46		306625.46	306618.46	306617.48

Finish: Stainless steel matt. PVD and polished on request.

AI

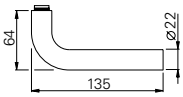

EN 1906 F

OGL	∅	⧄			Kit sets					Passive leaf	
S	22 mm	8 mm			107605.30	107600.30	107610.30	107620.30			
F	22 mm	9 mm	307683.30	307683.30	307600.30		307660.30		307605.30	307618.30	307617.30

Finish: Aluminium anodised, further colours on request.

For door thickness 38 – 45 mm. Fire-proof lever sets for door thickness 40 – 65 mm. Please advise door thickness when ordering.

D-210 Round rose handle

SGL

D-210 Round rose handle
with SGL – standard handles with friction bearing technology
Lever guidance in maintenance-free friction bearing with adjustment function integrated in nylon base rose. With spring support. Lever with fixable bearing, nylon base with positioning studs. DIN left / DIN right useable. Concealed, continous screw connection.

User category: class 3

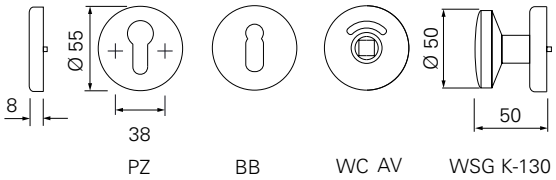

SGL – ROUND ROSE HANDLE

ER

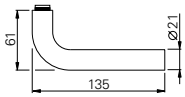

EN 1906

SGL	∅	⧄	Kit sets			
S	21 mm	8 mm	152605.46	152600.46	152615.46	152620.46

Finish: Stainless steel matt. PVD and polished on request.

AI

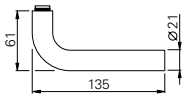

EN 1906

SGL	∅	⧄	Kit sets			
S	21 mm	8 mm	152605.30	152600.30	152615.30	152620.30

Finish: Aluminium anodised, further colours on request.

For door thickness 38 – 45 mm. Fire-proof lever sets for door thickness 40 – 65 mm. Please advise door thickness when ordering.

Swissdoor ApS • Stenhuggervej 2 • 5471 Søndersø • Danmark Telefon +45 86 28 00 00 • mail@swissdoor.dk • www.swissdoor.dk

SWISSDOOR
DØRTEKNIK FOR PROFESSIONELLE

ECO **D-200**
Frankfurt standard L-shaped handle

In their efforts to lower house construction prices and rents in the 1920s, many architects became involved with the standardization of construction components. The ECO D-200 is a variation of the draft that once made a name for itself as the Frankfurt standard handle where a round rod was bent to 90 degrees and positioned on a simple rosette. All of the Frankfurt versions are based on the idea of the right angle.

ECO Schulte has included the Frankfurt standard handle in its product range in a high-quality modern interpretation as factory design draft D-210.

Swissdoor ApS • Stenhuggervej 2 • 5471 Søndersø • Danmark Telefon +45 86 28 00 00 • mail@swissdoor.dk • www.swissdoor.dk

ECO **D-310**

Swissdoor ApS • Stenhuggervej 2 • 5471 Søndersø • Danmark Telefon +45 86 28 00 00 • mail@swissdoor.dk • www.swissdoor.dk

ECO **ROUND ROSE HANDLES · D-310**

EN 1906 F

ECO

Product characteristics

Tested acc. to	EN 1906
With 9 mm spindle tested Fire-protection tested	F
Lever form for escape doors and emergency exits	–
Restoring spring	■
Fixable bearing	■
Steel base with positioning studs	■
Concealed through-screw technology	■
DIN left / right	■

■ Yes - No ◘ Option

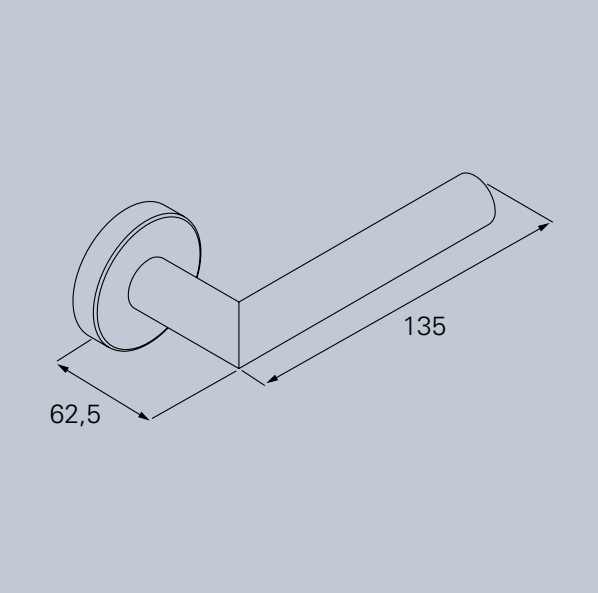

OKL
OGL
SGL

Material:

ER Stainless steel

Al Aluminium

PRODUCT FAMILY D-300

Standard fittng

D-310 . Page 226

D-330 . Page 236

Handle on plate

D-310 . Page 229, 233

D-310 . Page 231

Oval rose handle

D-310 . Page 272

D-315 . Page 276

D-335 . Page 280

Security handle

D-310 . Page 312

D-315 . Page 324

Window handle

F-310 . Page 328

For door thickness 38 – 45 mm. Fire-proof lever sets for door thickness 40 – 65 mm. Please advise door thickness when ordering.

D-310 Round rose handle

OKL

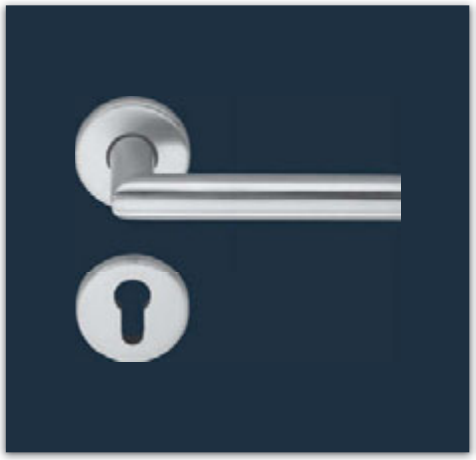

D-310 Round rose handle with OKL – ball-bearing technology

Lever guidance consists of a closed, maintenance-free ball bearing. Fixable bearing with restoring spring, DIN left / DIN right useable. Stainless steel base with positioning studs. Concealed, continous screw connection.

Utilization categories: class 4

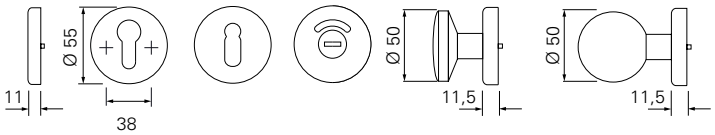

PZ	BB	WC	WSG K-130	WSG K-165
FS-PZ F		SK	FS-WSG K-130 F	FS-WSG K-165 F

OKL - ROUND ROSE HANDLE

ER

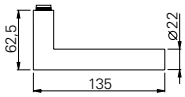

EN 1906 F

OKL

	∅	⧄	Kit sets				
S	22 mm	8 mm	153205.46	153200.46	153215.46	153216.46	153220.46
F	22 mm	9 mm	353205.46		353215.46	353218.46	

Finish: Stainless steel matt. PVD and polished on request.

For door thickness 38 – 45 mm. Fire-proof lever sets for door thickness 40 – 65 mm. Please advise door thickness when ordering.

Swissdoor ApS • Stenhuggervej 2 • 5471 Søndersø • Danmark Telefon +45 86 28 00 00 • mail@swissdoor.dk • www.swissdoor.dk

D-310 Long plate handle (L)

OKL

D-310 Long plate handle (L) with OKL – ball-bearing technolog

The lever is clenched inside the inner ring of the ball-bearing. The outer ring of the ball-bearing is fixed into the base construction. This connection guarantees an additional lasting of the lever sets on the door leafs and is known for high capacity in axial and radial direction. screw connection.

User category: class 4 / PZ 92 on request

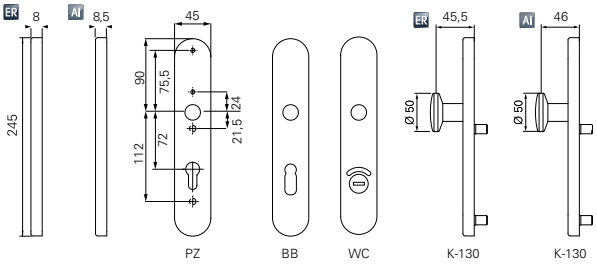

OKL – LONG PLATE HANDLE (L)

ER

EN 1906 F

OKL	∅	⧄	Kit sets			
S	22 mm	8 mm	1k6705.46	1k6700.46	1k6715.46	1k6720.46
F	22 mm	9 mm	3k6705.46		3k6715.46	

Finish: Stainless steel matt.

AI

EN 1906 F

OKL	∅	⧄	Kit sets			
S	22 mm	8 mm	1k7705.30	1k7700.30	1k7715.30	1k7720.30
F	22 mm	9 mm	3k7705.30		3k7715.30	

Finish: Aluminium anodised, further colours on request.

For door thickness 38 – 45 mm. Fire-proof lever sets for door thickness 40 – 65 mm. Please advise door thickness when ordering.

D-310 Round rose handle

OGL

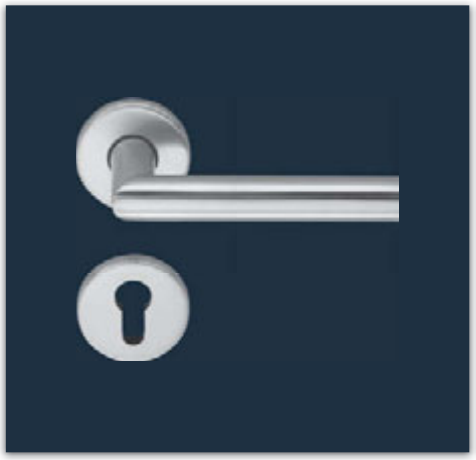

D-310 Round rose handle with OGL – friction bearing technology

Lever guidance consists of a closed, maintenance-free friction bearing with self-lubricating plastic. Fixable bearing. DIN left / DIN right useable. Steel base with positioning studs. Concealed, continous screw connection.

User category: class 4

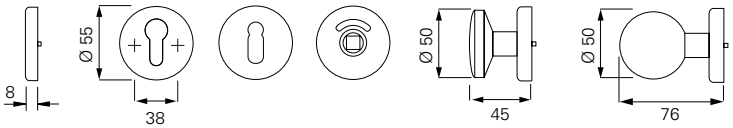

PZ FS-PZ F	BB	WC AV	WSG K-130 FS-WSG K-130 F	WSG K-165 FS-WSG K-165 F

OGL – ROUND ROSE HANDLE

ER

EN 1906 F

OGL

	∅	⧄		Kit sets						Passive leaf	
S	21 mm	8 mm		156705.46	156700.46	156710.46	156780.46	156720.46			
F	21 mm	9 mm	316821.46	356700.46		356760.46	356782.46		356705.46	356718.46	356717.46

Finish: Stainless steel matt. PVD and polished on request.

AI

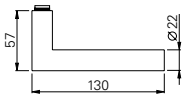

EN 1906 F

OGL

	∅	⧄		Kit sets					Passive leaf	
S	22 mm	8 mm		157705.30	157700.30	157710.30	157720.30			
F	22 mm	9 mm	317223.30	357700.30		357760.30		357704.30	357718.30	357717.30

Finish: Aluminium anodised, further colours on request.

For door thickness 38 – 45 mm. Fire-proof lever sets for door thickness 40 – 65 mm. Please advise door thickness when ordering.

Swissdoor ApS • Stenhuggervej 2 • 5471 Søndersø • Danmark Telefon +45 86 28 00 00 • mail@swissdoor.dk • www.swissdoor.dk

D-310 Short plate handle (K)

OGL

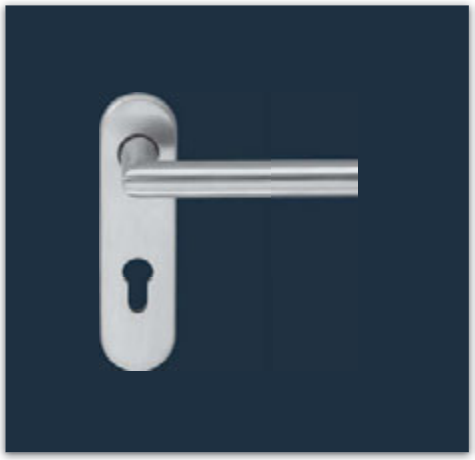

D-310 Short plate handle (K)
with OGL – friction bearing technology
Lever guidance consists of a closed, maintenance-free friction bearing with self-lubricating plastic. Fixable bearing. DIN left / DIN right useable. Steel base with positioning studs. Concealed, continous screw connection.

User category: class 4

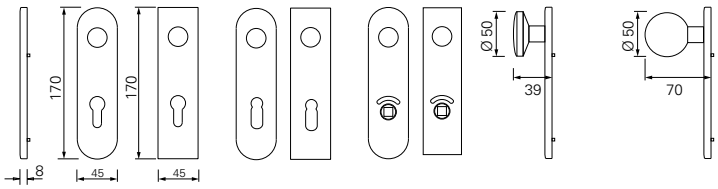

DD-PZ FS-DD F | DD-BB | WC AV | WSG K-130 FS-WSG F | WSG K-130 FS-WSG F

OGL – SHORT PLATE HANDLE (K)

ER

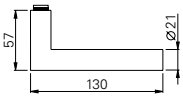

EN 1906 F

OGL	∅	⧄		Kit sets						Passive leaf	
S	21 mm	8 mm		106705.46	106700.46	106710.46	106760.46	106720.46			
F	21 mm	9 mm	306781.46	306700.46		306760.46	306763.46		306725.46	306718.46	306717.46

Finish: Stainless steel matt. PVD and polished on request.

AI

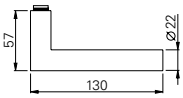

EN 1906 F

OGL	∅	⧄			Kit sets					Passive leaf	
S	22 mm	8 mm			107705.30	107700.30	107710.30	107720.30			
F	22 mm	9 mm	307781.30	307783.30	307700.30		307760.30		307704.30	307718.30	307717.30

Finish: Aluminium anodised, further colours on request.

For door thickness 38 – 45 mm. Fire-proof lever sets for door thickness 40 – 65 mm. Please advise door thickness when ordering.

ECO **HANDLES ON PLATE · D-310**

EN 1906 F

OGL – SHORT PLATE HANDLE (K)

Al

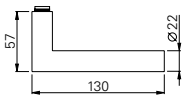

EN 1906 F

OGL

	∅	⊘			Kit sets					Passive leaf	
S	22 mm	8 mm			147705.30	147700.30	147710.30	147720.30			
F	22 mm	9 mm	347781.30	347783.30	347700.30		347760.30		347704.30	347718.30	347717.30

Finish: Aluminium anodised, further colours on request.

ROUND ROSE HANDLE · D-310

D-310 Long plate handle (L)

OGL

D-310 Long plate handle (L)
with OGL – friction bearing technology
Maintenance-free metal friction bearing. The lever is fixed in the bearing. DIN left / DIN right useable. Steel base with positioning studs. Concealed, continous screw connection.

User category: class 4
PZ 92 on request

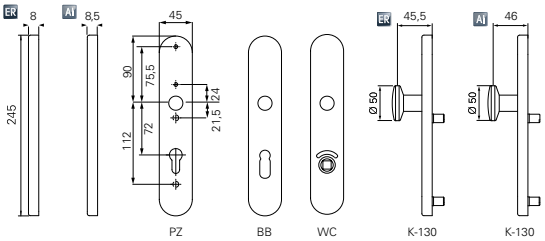

OGL – LONG PLATE HANDLE (L)

ER

EN 1906 F

OGL

	∅	⧄	Kit sets			
S	22 mm	8 mm	1g6705.46	1g6700.46	1g6715.46	1g6720.46
F	22 mm	9 mm	3g6705.46		3g6715.46	

Finish: Stainless steel matt.

AI

EN 1906 F

OGL

	∅	⧄	Kit sets			
S	22 mm	8 mm	1g7705.30	1g7700.30	1g7715.30	1g7720.30
F	22 mm	9 mm	3g7705.30		3g7715.30	

Finish: Aluminium anodised, further colours on request.

3

For door thickness 38 – 45 mm. Fire-proof lever sets for door thickness 40 – 65 mm. Please advise door thickness when ordering.

D-310 Round rose handle

SGL

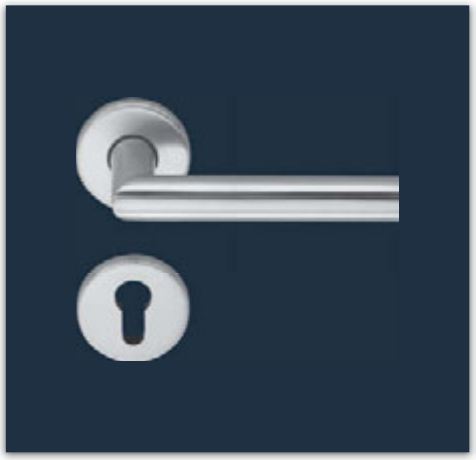

D-310 Round rose handle
with SGL – Standard handles with friction bearing technology
Lever guidance in maintenance-free friction bearing with adjustment function integrated in nylon base rose. With spring support. Lever with fixable bearing, nylon base with positioning studs. DIN left / DIN right useable. Concealed, continous screw connection.
User category: class 3

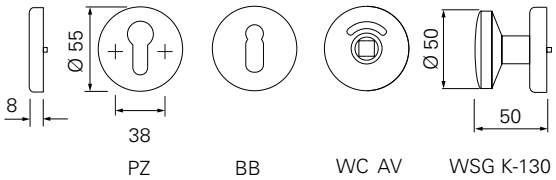

SGL – ROUND ROSE HANDLE

ER

EN 1906

SGL

	∅	⧄	Kit sets			
S	21 mm	8 mm	152705.46	152700.46	152715.46	152720.46

Finish: Stainless steel matt. PVD and polished on request.

AI

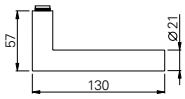

EN 1906

SGL

	∅	⧄	Kit sets			
S	21 mm	8 mm	152705.30	152700.30	152715.30	152720.30

Finish: Aluminium anodised, further colours on request.

For door thickness 38 – 45 mm. Fire-proof lever sets for door thickness 40 – 65 mm. Please advise door thickness when ordering.

Swissdoor ApS • Stenhuggervej 2 • 5471 Søndersø • Danmark Telefon +45 86 28 00 00 • mail@swissdoor.dk • www.swissdoor.dk

ECO **D-300**
Frankfurt mitred handle

The ECO D-300 is a variation of a geometric handle draft design from the 1920s which stands out through the legible simplicity of the construction: a circular tube is separated with a mitred cut before the two halves are joined together again at right angles.

This handle was given the attribute "Frankfurt" not only through its close geometric relationship with the Frankfurt standard handle but also because it was used when the Frankfurt Architecture Museum was built.

ECO Schulte has included its interpretation of the Frankfurt mitred handle in its product range as factory design draft D-310.

SWiSSDOOR
DØRTEKNIK FOR PROFESSIONELLE

ECO **D-330**

Swissdoor ApS • Stenhuggervej 2 • 5471 Søndersø • Danmark Telefon +45 86 28 00 00 • mail@swissdoor.dk • www.swissdoor.dk

ECO **ROUND ROSE HANDLES · D-330**

EN 1906 | EN 179 | F

ECO

Product characteristics

Tested acc. to	EN 1906
With 9 mm spindle tested Fire-protection tested	F
Lever form for escape doors and emergency exits	EN 179
Restoring spring	■
Fixable bearing	■
Steel base with positioning studs	■
Concealed through-screw technology	■
DIN left / right	■

■ Yes - No ◘ Option

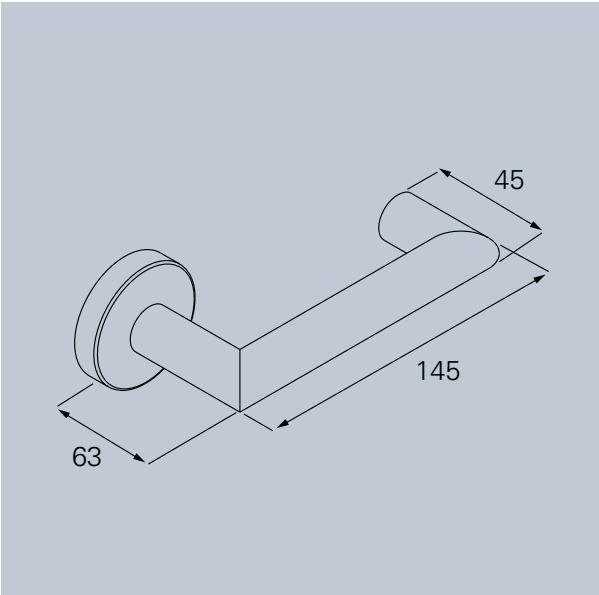

OKL
OGL

Material:

ER Stainless steel

Al Aluminium

3

PRODUCT FAMILY D-300

Standard handle

D-310 . Page 226

D-330 . Page 236

Handle on plate

D-330 . Page 239, 242

D-330 . Page 241

Oval rose handle

D-310 . Page 272

D-315 . Page 276

D-335 . Page 280

Security handle

D-310 . Page 312

D-315 . Page 324

Window handle

F-310 . Page 328

D-330 Round rose handle

OKL

D-330 Round rose handle with OKL – ball-bearing technology

Lever guidance consists of a closed, maintenance-free ball bearing. Fixable bearing with restoring spring, DIN left / DIN right useable. Stainless steel base with positioning studs. Concealed, continous screw connection.

User category: class 4

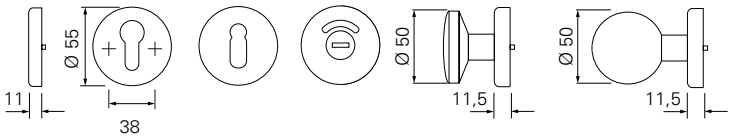

PZ FS-PZ F	BB	WC SK	WSG K-130 FS-WSG K-130 F	WSG K-165 FS-WSG K-165 F

OKL ROUND ROSE HANDLE

ER

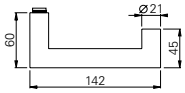

EN 1906 EN 179 F

OKL

	∅	⧄	Kit sets				
S	21 mm	8 mm	153905.46	153900.46	153915.46	153916.46	153920.46
F	21 mm	9 mm	353905.46		353915.46	353918.46	

Finish: Stainless steel matt. PVD and polished on request.

For door thickness 38 – 45 mm. Fire-proof lever sets for door thickness 40 – 65 mm. Please advise door thickness when ordering.

Swissdoor ApS • Stenhuggervej 2 • 5471 Søndersø • Danmark Telefon +45 86 28 00 00 • mail@swissdoor.dk • www.swissdoor.dk

D-330 Long plate handle (L)

OKL

D-330 Long plate handle (L)
with OKL – ball-bearing technology

The lever is clenched inside the inner ring of the ball-bearing. The outer ring of the ball-bearing is fixed into the base construction. This connection guarantees an additional lasting of the lever sets on the door leafs and is known for high capacity in axial and radial direction.

User category: class 4 / PZ 92 on request

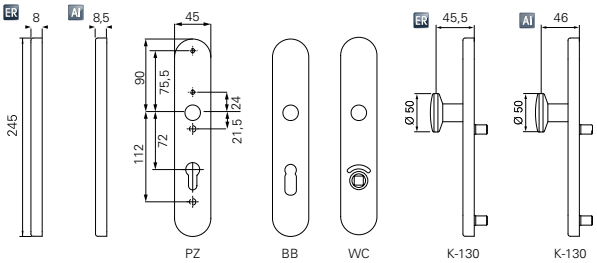

OKL – LONG PLATE HANDLE (L)

ER

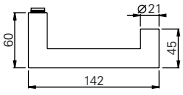

EN 1906 EN 179 F

OKL	∅	⧄	Kit sets	
F	21 mm	9 mm	3k6805.46	3k6815.46

Finish: Stainless steel matt.

AI

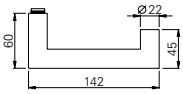

EN 1906 EN 179 F

OKL	∅	⧄	Kit sets	
F	22 mm	9 mm	3k7805.30	3k7815.30

Finish: Aluminium anodised, further colours on request.

3

For door thickness 38 – 45 mm. Fire-proof lever sets for door thickness 40 – 65 mm. Please advise door thickness when ordering.

D-330 Round rose handle

OGL

D-330 Round rose handle with OGL – friction bearing technology

Lever guidance consists of a closed, maintenance-free friction bearing with self-lubricating plastic. Fixable bearing. DIN left / DIN right useable. Steel base with positioning studs. Concealed, continous screw connection.

User category: class 4

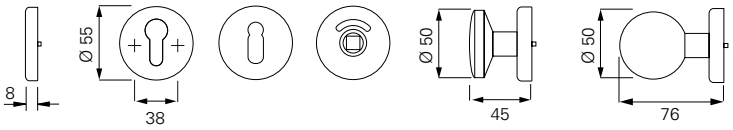

PZ FS-PZ F	BB	WC AV	WSG K-130 FS-WSG K-130 F	WSG K-165 FS-WSG K-165 F

OGL – ROUND ROSE HANDLE

ER

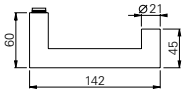

EN 1906 EN 179 F

OGL	∅	⧄		Kit sets						Passive leaf	
S	21 mm	8 mm		156805.46	156800.46	156810.46	156880.46	156820.46			
F	21 mm	9 mm	316851.46	356801.46		356860.46	356882.46			356818.46	356817.46
	21 mm	9 mm		356850.46							

Finish: Stainless steel matt. PVD and polished on request.

AI

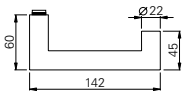

EN 1906 EN 179 F

OGL	∅	⧄		Kit sets					Passive leaf	
S	22 mm	8 mm		157208.30	157200.30	157210.30	157220.30			
F	22 mm	9 mm	317029.30	357800.30		357860.30		357804.30	357818.30	357817.30
	22 mm	9 mm		357850.30						

Finish: Aluminium anodised, further colours on request.

For door thickness 38 – 45 mm. Fire-proof lever sets for door thickness 40 – 65 mm. Please advise door thickness when ordering.

Swissdoor ApS • Stenhuggervej 2 • 5471 Søndersø • Danmark Telefon +45 86 28 00 00 • mail@swissdoor.dk • www.swissdoor.dk

D-330 Short plate handle (K)

OGL

D-330 Short plate handle (K)
with OGL – friction bearing technology
Lever guidance consists of a closed, maintenance-free friction bearing with self-lubricating plastic. Fixable bearing. DIN left / DIN right useable. Steel base with positioning studs. Concealed, continous screw connection.

User category: class 4

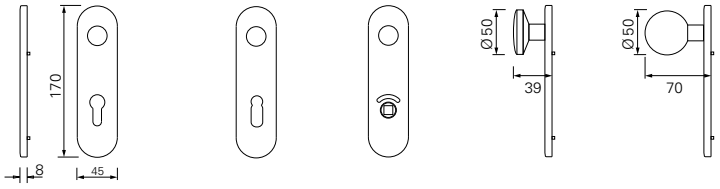

DD-PZ FS-DD F | DD-BB | WC AV | WSG K-130 FS-WSG F | WSG K-130 FS-WSG F

OGL – SHORT PLATE HANDLE (K)

ER

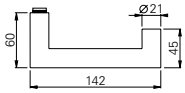

EN 1906 EN 179 F

OGL	∅	⧄		Kit sets						Passive leaf	
S	21 mm	8 mm		106805.46	106800.46	106810.46	106860.46	106820.46			
F	21 mm	9 mm	306881.46	306800.46		306860.46	306863.46		306825.46	306818.46	306817.46
	21 mm	9 mm		306850.46							

Finish: Stainless steel matt. PVD and polished on request.

AI

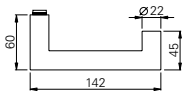

EN 1906 EN 179 F

OGL	∅	⧄			Kit sets					Passive leaf	
S	22 mm	8 mm			107205.30	107200.30	107210.30	107220.30			
F	22 mm	9 mm	307881.30	307883.30	307800.30		307860.30		307804.30	307819.30	307817.30
	22 mm	9 mm			307850.30						

Finish: Aluminium anodised, further colours on request.

For door thickness 38 – 45 mm. Fire-proof lever sets for door thickness 40 – 65 mm. Please advise door thickness when ordering.

D-330 Long plate handle (L)

OGL

D-330 Long plate handle (L)
with OGL – friction bearing technology
Maintenance-free metal friction bearing. The lever is fixed in the bearing. DIN left / DIN right useable. Steel base with positioning studs. Concealed, continous screw connection.

User category: class 4
PZ 92 on request

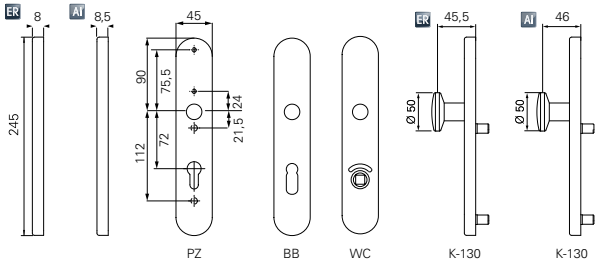

OGL – LONG PLATE HANDLE (L)

ER

EN 1906 EN 179 F

OGL	∅	⊠	Kit sets	
F	22 mm	9 mm	3g6805.46	3g6815.46

Finish: Stainless steel matt.

AI

EN 1906 EN 179 F

OGL	∅	⊠	Kit sets	
F	22 mm	9 mm	3g7805.30	3g7815.30

Finish: Aluminium anodised, further colours on request.

For door thickness 38 – 45 mm. Fire-proof lever sets for door thickness 40 – 65 mm. Please advise door thickness when ordering.

SWISSDOOR
DØRTEKNIK FOR PROFESSIONELLE

ROUND ROSE HANDLE · D-410

Swissdoor ApS • Stenhuggervej 2 • 5471 Søndersø • Danmark Telefon +45 86 28 00 00 • mail@swissdoor.dk • www.swissdoor.dk

SWiSSDOOR
DØRTEKNIK FOR PROFESSIONELLE

ECO **D-410**

Swissdoor ApS • Stenhuggervej 2 • 5471 Søndersø • Danmark Telefon +45 86 28 00 00 • mail@swissdoor.dk • www.swissdoor.dk

ECO **ROUND ROSE HANDLES · D-410**

EN 179 EN 1906 F

ECO

Product characteristics

Tested acc. to	EN 1906
With 9 mm spindle tested Fire-protection tested	F
Lever form for escape doors and emergency exits	EN 179
Restoring spring	■
Fixable bearing	■
Steel base with positioning studs	■
Concealed through-screw technology	■
DIN left / right	■

■ Yes - No ◘ Option

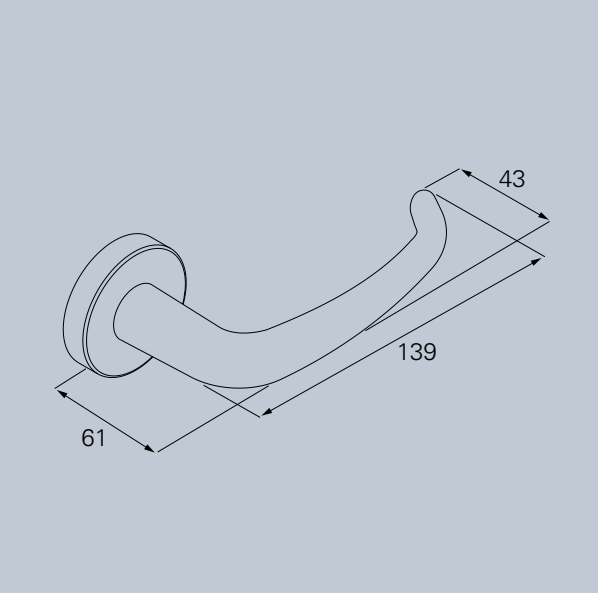

OKL
OGL
SGL

Material:

ER Stainless steel

Al Aluminium

3

PRODUCT FAMILY D-400

Standard handle

D-410 . Page 244

D-490 . Page 252

Handle on plate

D-410 . Page 247, 250

D-410 . Page 249

Oval rose handle

D-410 . Page 284

D-415 . Page 288

Window handle

F-410 . Page 328

D-410 Round rose handle

OKL

D-410 Round rose handle with OKL – ball-bearing technology

Lever guidance consists of a closed, maintenance-free ball bearing. Fixable bearing with restoring spring, DIN left / DIN right useable. Stainless steel base with positioning studs. Concealed, continous screw connection.

User category: class 4

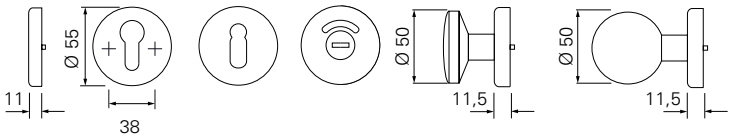

PZ FS-PZ F	BB	WC SK	WSG K-130 FS-WSG K-130 F	WSG K-165 FS-WSG K-165 F

OKL ROUND ROSE HANDLE

ER

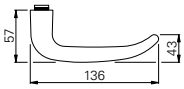

EN 179 EN 1906 F

OKL		Kit sets				
	⧄					
S	8 mm	153305.46	153300.46	153315.46	153316.46	153320.46
F	9 mm	353305.46		353315.46	353318.46	

Finish: Stainless steel matt. PVD and polished on request.

For door thickness 38 – 45 mm. Fire-proof lever sets for door thickness 40 – 65 mm. Please advise door thickness when ordering.

D-410 Long plate handle (L)

OKL

D-410 Long plate handle (L)
with OKL – ball-bearing technology
The lever is clenched inside the inner ring of the ball-bearing. The outer ring of the ball-bearing is fixed into the base construction. This connection guarantees an additional lasting of the lever sets on the door leafs and is known for high capacity in axial and radial direction.

User category: class 4
PZ 92 on request

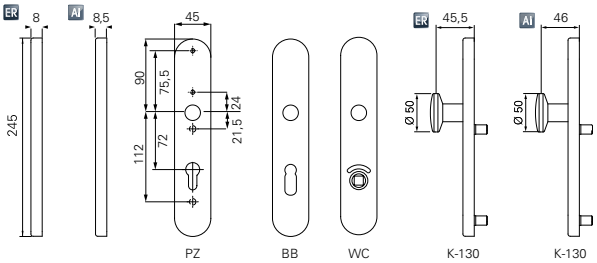

OKL – LONG PLATE HANDLE (L)

ER

EN 179 EN 1906 F

OKL	⌀	Kit sets			
S	8 mm	1k6305.46	1k6300.46	1k6315.46	1k6320.46
F	9 mm	3k6305.46		3k6315.46	

Finish: Stainless steel matt.

AI

EN 179 EN 1906 F

OKL	⌀	Kit sets			
S	8 mm	1k7305.30	1k7300.30	1k7315.30	1k7320.30
F	9 mm	3k7305.30		3k7315.30	

Finish: Aluminium anodised, further colours on request.

For door thickness 38 – 45 mm. Fire-proof lever sets for door thickness 40 – 65 mm. Please advise door thickness when ordering.

D-410 Round rose handle

OGL

D-410 Round rose handle with OGL – friction bearing technology

Lever guidance consists of a closed, maintenance-free friction bearing with self-lubricating plastic. Fixable bearing. DIN left / DIN right useable. Steel base with positioning studs. Concealed, continous screw connection.

User category: class 4

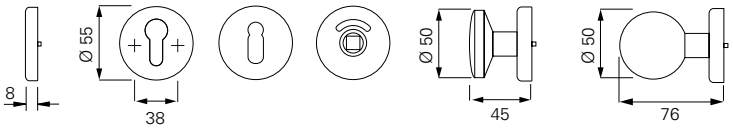

PZ BB WC WSG K-130 WSG K-165

OGL – ROUND ROSE HANDLE

ER

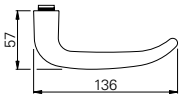

EN 179 EN 1906 F

OGL	⌀		Kit sets						Passive leaf	
S	8 mm		156305.46	156300.46	156310.46	156380.46	156320.46			
F	9 mm	316801.46	356350.46		356380.46	356382.46		356355.46	356385.46	356384.46
	9 mm		356360.46							

Finish: Stainless steel matt. PVD and polished on request.

AI

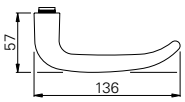

EN 179 EN 1906 F

OGL	⌀		Kit sets					Passive leaf	
S	8 mm		157305.30	157300.30	157310.30	157320.30			
F	9 mm	317226.30	357350.30		357380.30		357355.30	357328.30	357327.30
	9 mm		357360.30						

Finish: Aluminium anodised, further colours on request.

For door thickness 38 – 45 mm. Fire-proof lever sets for door thickness 40 – 65 mm. Please advise door thickness when ordering.

Swissdoor ApS • Stenhuggervej 2 • 5471 Søndersø • Danmark Telefon +45 86 28 00 00 • mail@swissdoor.dk • www.swissdoor.dk

D-410 Short plate handle (K)

OGL

D-410 Short plate handle (K)
with OGL – friction bearing technology
Lever guidance consists of a closed, maintenance-free friction bearing with self-lubricating plastic. Fixable bearing. DIN left / DIN right useable. Steel base with positioning studs. Concealed, continous screw connection.

User category: class 4

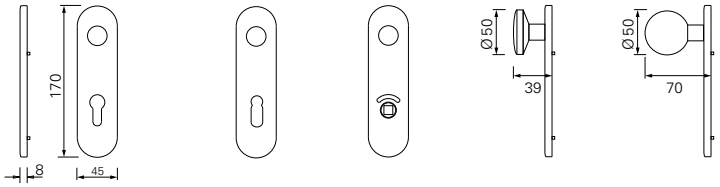

DD-PZ FS-DD F | DD-BB | WC AV | WSG K-130 FS-WSG F | WSG K-130 FS-WSG F

OGL – SHORT PLATE HANDLE (K)

ER

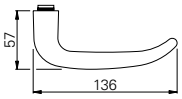

EN 179 EN 1906 F

OGL	⌀		Kit sets						Passive leaf	
S	8 mm		106405.46	106400.46	106410.46	106460.46	106420.46			
F	9 mm	306481.46	306400.46		306460.46	306463.46		306425.46	306418.46	306417.46
	9 mm		306450.46							

Finish: Stainless steel matt. PVD and polished on request.

AI

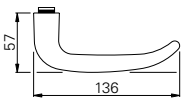

EN 179 EN 1906 F

OGL	⌀			Kit sets					Passive leaf	
S	8 mm			107805.30	107800.30	107810.30	107820.30			
F	9 mm	307481.30	307483.30	307400.30		307460.30		307425.30		307417.30
	9 mm			307450.30						

Finish: Aluminium anodised, further colours on request.

For door thickness 38 – 45 mm. Fire-proof lever sets for door thickness 40 – 65 mm. Please advise door thickness when ordering.

D-410 Long plate handle (L)

OGL

D-410 Long plate handle (L)
with OGL – friction bearing technology
Maintenance-free metal friction bearing. The lever is fixed in the bearing. DIN left / DIN right useable. Steel base with positioning studs. Concealed, continous screw connection.

User category: class 4
PZ 92 on request

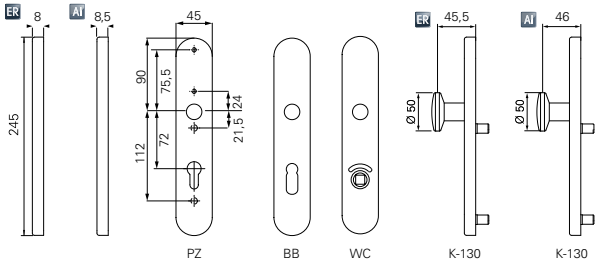

OGL – LONG PLATE HANDLE (L)

ER

EN 179 EN 1906 F

OGL	⧄	Kit sets			
S	8 mm	1g6305.46	1g6300.46	1g6315.46	1g6320.46
F	9 mm	3g6305.46		3g6315.46	

Finish: Stainless steel matt.

AI

EN 179 EN 1906 F

OGL	⧄	Kit sets			
S	8 mm	1g7305.30	1g7300.30	1g7315.30	1g7320.30
F	9 mm	3g7305.30		3g7315.30	

Finish: Aluminium anodised, further colours on request.

For door thickness 38 – 45 mm. Fire-proof lever sets for door thickness 40 – 65 mm. Please advise door thickness when ordering.

Swissdoor ApS • Stenhuggervej 2 • 5471 Søndersø • Danmark Telefon +45 86 28 00 00 • mail@swissdoor.dk • www.swissdoor.dk

D-410 Round rose handle

SGL

D-410 Round rose handle
with SGL – Standard handles with friction bearing technology
Lever guidance in maintenance-free friction bearing with adjustment function integrated in nylon base rose. With spring support. Lever with fixable bearing, nylon base with positioning studs.

DIN left / DIN right useable. Concealed, continous screw connection.

User category: class 3

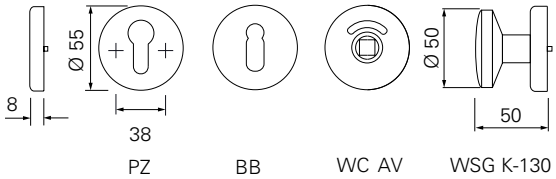

SGL – ROUND ROSE HANDLE

ER

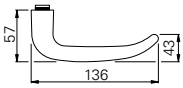

EN 1906

SGL		Kit sets			
	⌀				
S	8 mm	152d05.46	152d00.46	152d15.46	152d20.46

Finish: Stainless steel matt. PVD and polished on request.

AI

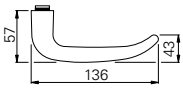

EN 1906

SGL		Kit sets			
	⌀				
S	8 mm	152d05.30	152d00.30	152d15.30	152d20.30

Finish: Aluminium anodised, further colours on request.

For door thickness 38 – 45 mm. Fire-proof lever sets for door thickness 40 – 65 mm. Please advise door thickness when ordering.

SWiSSDOOR
DØRTEKNIK FOR PROFESSIONELLE

ECO **D-490**

Swissdoor ApS • Stenhuggervej 2 • 5471 Søndersø • Danmark Telefon +45 86 28 00 00 • mail@swissdoor.dk • www.swissdoor.dk

ECO **ROUND ROSE HANDLES · D-490**

EN 1906 | EN 179 | F

ECO

Product characteristics

Tested acc. to	EN 1906
With 9 mm spindle tested Fire-protection tested	F
Lever form for escape doors and emergency exits	EN 179
Restoring spring	■
Fixable bearing	■
Steel base with positioning studs	■
Concealed through-screw technology	■
DIN left / right	■

■ Yes - No ◘ Option

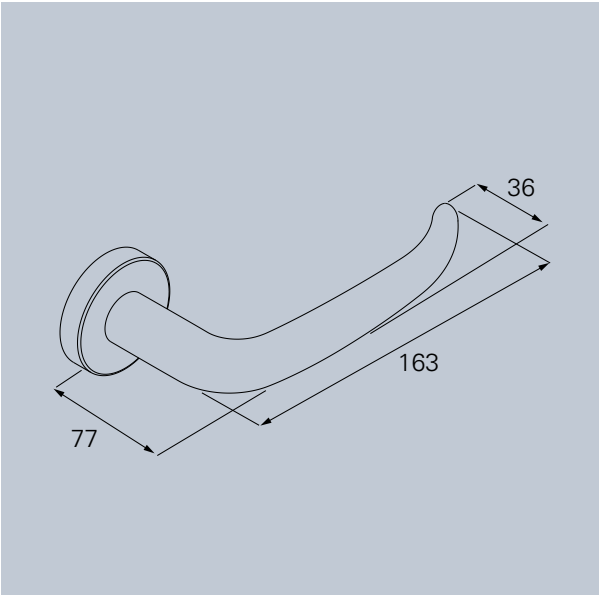

OKL

Material:

ER Stainless steel

3

PRODUCT FAMILY D-400

Standard handle

D-410 . Page 244

D-490 . Page 252

Oval rose handle

D-410 . Page 284

D-415 . Page 288

Window handle

F-410 . Page 328

D-490 Round rose handle

OKL

D-490 Round rose handle with OKL – ball-bearing technology

Lever guidance consists of a closed, maintenance-free ball bearing. Fixable bearing with restoring spring, DIN left / DIN right useable. Stainless steel base with positioning studs. Concealed, continous screw connection.

User category: class 4

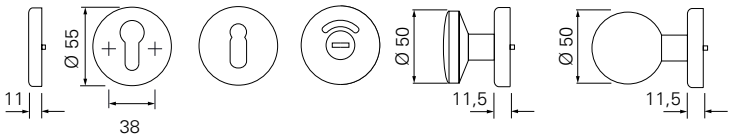

PZ FS-PZ F	BB	WC SK	WSG K-130 FS-WSG K-130 F	WSG K-165 FS-WSG K-165 F

OKL ROUND ROSE HANDLE

ER

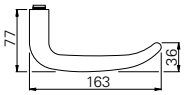

EN 1906 EN 179 F

OKL		Kit sets				
	⧄					
S	8 mm	153705.46	153700.46	153715.46	153716.46	153720.46
F	9 mm	353705.46		353715.46	353718.46	

Finish: Stainless steel matt. PVD and polished on request.

For door thickness 38 – 45 mm. Fire-proof lever sets for door thickness 40 – 65 mm. Please advise door thickness when ordering.

SWiSSDOOR
DØRTEKNIK FOR PROFESSIONELLE

Humbold University, Berlin,
Germany

ECO handle technology
Comings and goings

The door handle (or door latch) is one of the most frequently used functional elements in the home: it's the very first object that people make contact with when they enter a building and it hardly ever comes to rest in busy places.

But the door handle is much more than a mere functional element of household technology. A person's first physical perception of a house is made through the door handle – and as we all know, you only get one chance to leave a good first impression.

SWiSSDOOR
DØRTEKNIK FOR PROFESSIONELLE

ECO **D-510**

Swissdoor ApS • Stenhuggervej 2 • 5471 Søndersø • Danmark Telefon +45 86 28 00 00 • mail@swissdoor.dk • www.swissdoor.dk

ECO **ROUND ROSE HANDLES · D-510**

EN 1906 F

ECO

Product characteristics

Tested acc. to	EN 1906
With 9 mm spindle tested Fire-protection tested	F
Lever form for escape doors and emergency exits	–
Restoring spring	■
Fixable bearing	■
Steel base with positioning studs	■
Concealed through-screw technology	■
DIN left / right	■

■ Yes - No ◘ Option

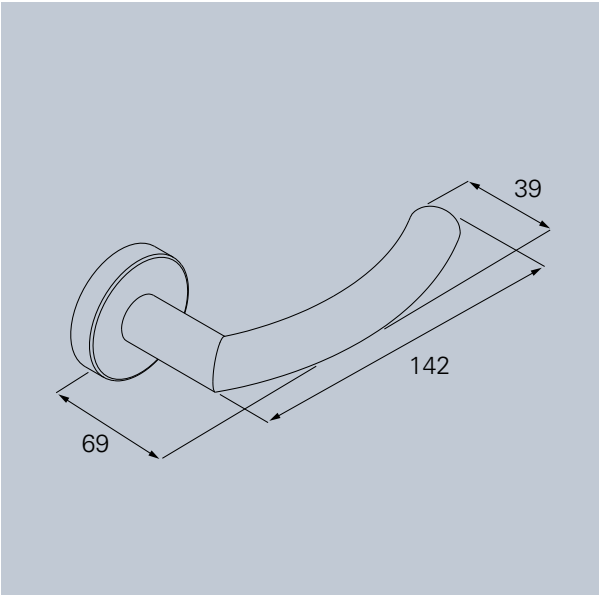

OKL
OGL
SGL

Material:

ER Stainless steel

Al Aluminium

3

PRODUCT FAMILY D-500

Standard handle	Handle on plate	Oval rose handle
D-510 . Page 256	D-510 . Page 260	D-515 . Page 292

D-510 Round rose handle

OKL

D-510 Round rose handle with OKL – ball-bearing technology

Lever guidance consists of a closed, maintenance-free ball bearing. Fixable bearing with restoring spring, DIN left / DIN right useable. Stainless steel base with positioning studs. Concealed, continous screw connection.

User category: class 4

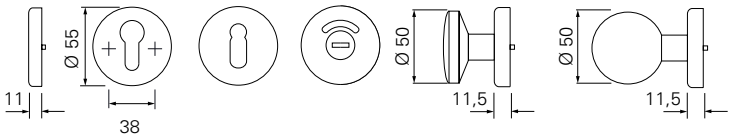

PZ FS-PZ F	BB	WC SK	WSG K-130 FS-WSG K-130 F	WSG K-165 FS-WSG K-165 F

OKL ROUND ROSE HANDLE

ER

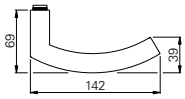

EN 1906 F

OKL	∅	⧄	Kit sets				
S	22 mm	8 mm	153605.46	153600.46	153615.46	153616.46	153620.46
F	22 mm	9 mm	353605.46		353610.46	353618.46	

Finish: Stainless steel matt. PVD and polished on request.

For door thickness 38 – 45 mm. Fire-proof lever sets for door thickness 40 – 65 mm. Please advise door thickness when ordering.

Swissdoor ApS • Stenhuggervej 2 • 5471 Søndersø • Danmark Telefon +45 86 28 00 00 • mail@swissdoor.dk • www.swissdoor.dk

D-510 Round rose handle

OGL

D-510 Round rose handle with OGL – friction bearing technology

Lever guidance consists of a closed, maintenance-free friction bearing with self-lubricating plastic. Fixable bearing. DIN left / DIN right useable. Steel base with positioning studs. Concealed, continous screw connection.

User category: class 4

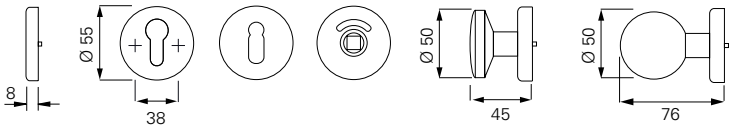

PZ FS-PZ F	BB	WC AV	WSG K-130 FS-WSG K-130 F	WSG K-165 FS-WSG K-165 F

OGL – ROUND ROSE HANDLE

ER

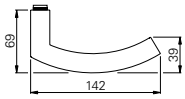

EN 1906 F

OGL	∅	⧄		Kit sets						Passive leaf	
S	21 mm	8 mm		156905.46	156900.46	156910.46	156980.46	156920.46			
F	21 mm	9 mm	316804.46	356900.46		356960.46	356970.46		356905.46	356918.46	356917.46

Finish: Stainless steel matt. PVD and polished on request.

AI

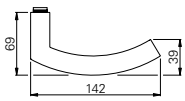

EN 1906 F

OGL	∅	⧄		Kit sets					Passive leaf	
S	22 mm	8 mm		157905.30	157900.30	157910.30		157920.30		
F	22 mm	9 mm	317227.30	357900.30		357960.30		357925.30	357918.30	357917.30

Finish: Aluminium anodised, further colours on request.

3

For door thickness 38 – 45 mm. Fire-proof lever sets for door thickness 40 – 65 mm. Please advise door thickness when ordering.

D-510 Short plate handle (K)

OGL

D-510 Short plate handle (K)
with OGL – friction bearing technology
Lever guidance consists of a closed, maintenance-free friction bearing with self-lubricating plastic. Fixable bearing. DIN left / DIN right useable. Steel base with positioning studs. Concealed, continous screw connection.

User category: class 4

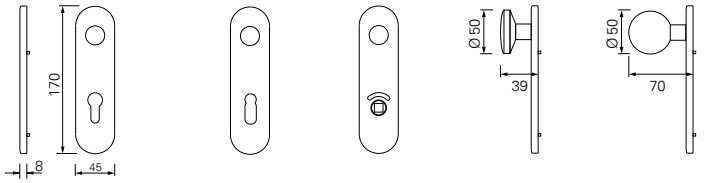

DD-PZ FS-DD F | DD-BB | WC AV | WSG K-130 FS-WSG F | WSG K-130 FS-WSG F

OGL – SHORT PLATE HANDLE (K)

ER

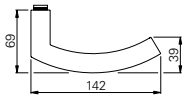

EN 1906 F

OGL	∅	⧄		Kit sets						Passive leaf	
S	21 mm	8 mm		106905.46	106900.46	106910.46	106960.46	106920.46			
F	21 mm	9 mm	306981.46		306900.46	306960.46	306963.46		306925.46	306918.46	306917.46

Finish: Stainless steel matt. PVD and polished on request.

AI

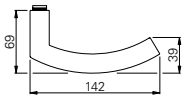

EN 1906 F

OGL	∅	⧄			Kit sets					Passive leaf	
S	22 mm	8 mm			107905.30	107900.30	107910.30	107920.30			
F	22 mm	9 mm	307981.30	307983.30		307900.30	307960.30		307925.30	307918.30	307917.30

Finish: Aluminium anodised, further colours on request.

For door thickness 38 – 45 mm. Fire-proof lever sets for door thickness 40 – 65 mm. Please advise door thickness when ordering.

Swissdoor ApS • Stenhuggervej 2 • 5471 Søndersø • Danmark Telefon +45 86 28 00 00 • mail@swissdoor.dk • www.swissdoor.dk

D-510 Round rose handle

SGL

D-510 Round rose handle
with SGL – Standard handles with friction bearing technology
Lever guidance in maintenance-free friction bearing with adjustment function integrated in nylon base rose. With spring support. Lever with fixable bearing, nylon base with positioning studs. DIN left / DIN right useable. Concealed, continous screw connection.
User category: class 3

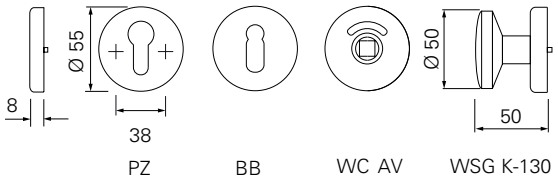

SGL – ROUND ROSE HANDLE

ER

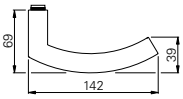

EN 1906

SGL	∅	⧄	Kit sets			
S	21 mm	8 mm	152805.46	152800.46	152815.46	152820.46

Finish: Stainless steel matt. PVD and polished on request.

AI

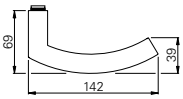

EN 1906

SGL	∅	⧄	Kit sets			
S	21 mm	8 mm	152805.30	152800.30	152815.30	152820.30

Finish: Aluminium anodised, further colours on request.

For door thickness 38 – 45 mm. Fire-proof lever sets for door thickness 40 – 65 mm. Please advise door thickness when ordering.

SWiSSDOOR
DØRTEKNIK FOR PROFESSIONELLE

OVAL ROSE HANDLE · D-335

SwissDoor ApS • Stenhuggervej 2 • 6471 Sønderso • Danmark Telefon +45 86 28 00 00 • mail@swissdoor.dk • www.swissdoor.dk

SWiSSDOOR
DØRTEKNIK FOR PROFESSIONELLE

Oval rose handles

SWiSSDOOR
DØRTEKNIK FOR PROFESSIONELLE

ECO **D-115**

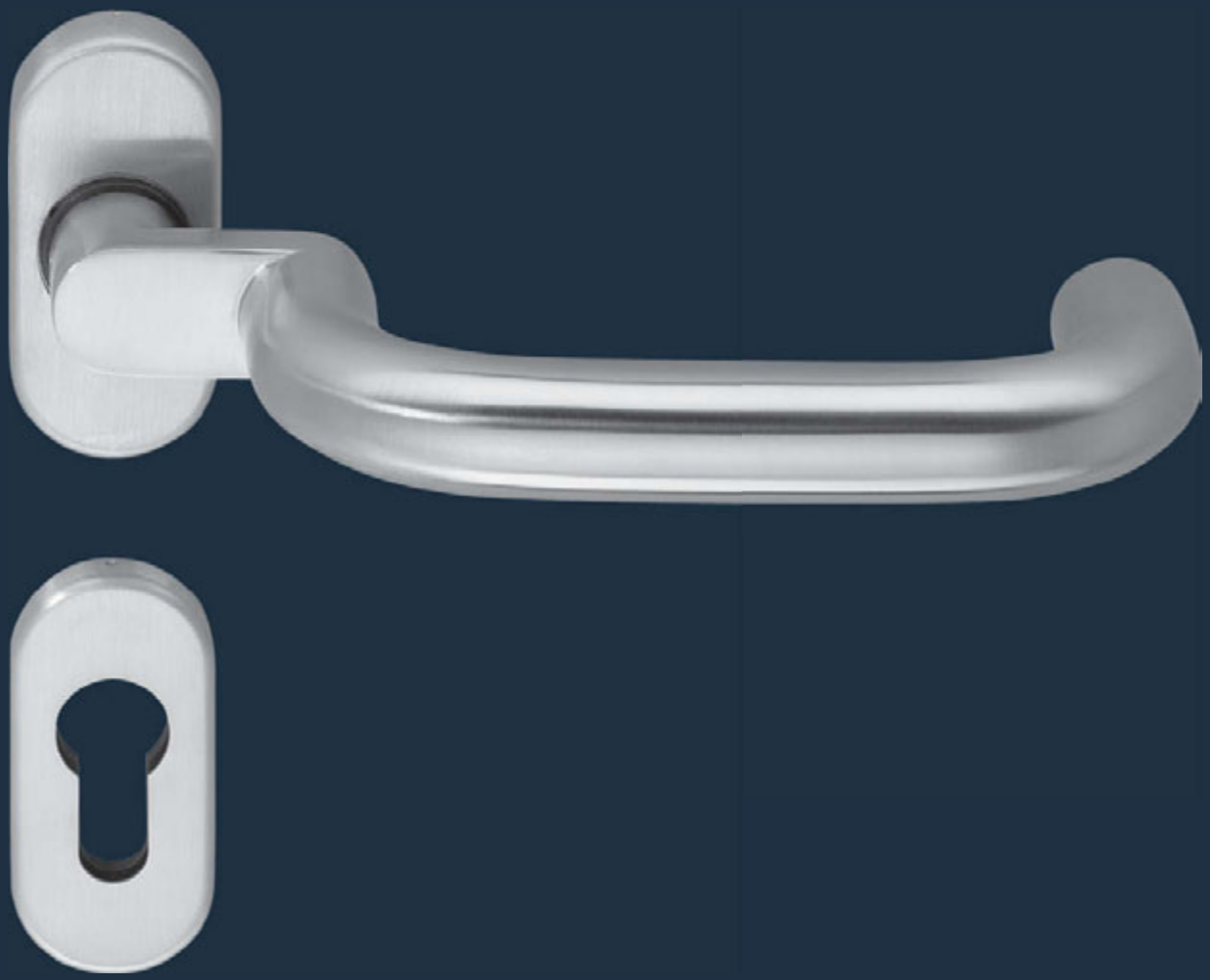

Swissdoor ApS • Stenhuggervej 2 • 5471 Søndersø • Danmark Telefon +45 86 28 00 00 • mail@swissdoor.dk • www.swissdoor.dk

ECO **OVAL ROSE HANDLES · D-115**

EN 1906 | EN 179 | F

ECO

Product characteristics

Tested acc. to	EN 1906
With 9 mm spindle tested Fire-protection tested	F
Lever form for escape doors and emergency exits	EN 179
Restoring spring	■
Fixable bearing	■
Steel base with positioning studs	■
Concealed through-screw technology	■
DIN left / right	■

■ Yes - No ◘ Option

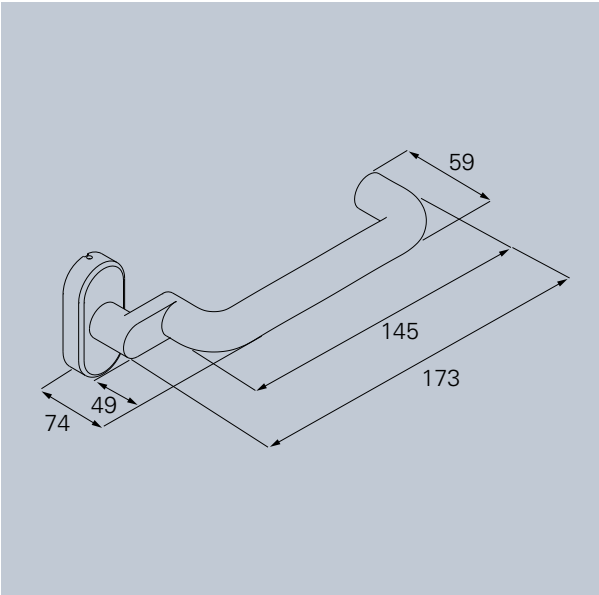

OGL

Material:

ER Stainless steel

3

PRODUCT FAMILY D-100

Standard handle

D-110 . Page 198

D-120 . Page 210

D-190 . Page 216

Handle on plate

D-110 . Page 201, 207

D-110 . Page 204

Oval rose handle

D-115 . Page 264

D-116 . Page 268

Security handle

D-110 . Page 298

D-111 . Page 308

D-116 . Page 320

Window handle

F-110 . Page 328

D-115 Oval rose handle

OGL

D-115 Oval rose with OGL – friction bearing technology

Lever guidance consists of a closed, maintenance-free friction bearing with self-lubricating plastic. Available with fixed knob or turnable knob and powerful locking (spring support).
Bore diametre of Ø 23 mm at the lever collar necessary.

User category: class 4

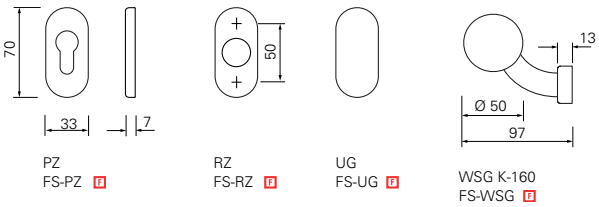

OGL – OVAL ROSE HANDLE

ER

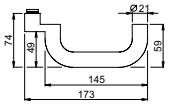

EN 1906 EN 179 F

OGL	∅	⧄		Kit sets				Knob		Escutcheon		
S	21 mm	8 mm	178412.46	185405.46	185415.46	185410.46	185425.46	178200.46	178202.46	176850.46	176852.46	176851.46
F	21 mm	9 mm	178410.46	385405.46	385415.46	385410.46	385425.46	178200.46	178204.46	176850.46	176852.46	176851.46

Finish: Stainless steel matt. PVD and polished on request

*Base rosette incl. fire-proof plate

For door thickness 38 – 45 mm. Fire-proof lever sets for door thickness 40 – 65 mm. Please advise door thickness when ordering.

Swissdoor ApS • Stenhuggervej 2 • 5471 Søndersø • Danmark Telefon +45 86 28 00 00 • mail@swissdoor.dk • www.swissdoor.dk

SWiSSDOOR
DØRTEKNIK FOR PROFESSIONELLE

National-/Olympiastadion, Beijing,
China

ECO handle technology
Comings and goings

The encounter with the handle is aesthetic and ergonomic at the same time. The first thing is "what the handle feels like" and this refers not only to its shape but also to its mechanical qualities when pressed. The high-quality bearings in the handle not only allow it to function for a long time, they also convey a feeling of quality.
ECO Schulte underscores this by granting a five-year warranty on its handle range.

Swissdoor ApS • Stenhuggervej 2 • 5471 Søndersø • Danmark Telefon +45 86 28 00 00 • mail@swissdoor.dk • www.swissdoor.dk

ECO **D-116**

Swissdoor ApS • Stenhuggervej 2 • 5471 Søndersø • Danmark Telefon +45 86 28 00 00 • mail@swissdoor.dk • www.swissdoor.dk

ECO **OVAL ROSE HANDLES · D-116**

EN 1906 | EN 179 | F

ECO

Product characteristics

Tested acc. to	EN 1906
With 9 mm spindle tested Fire-protection tested	F
Lever form for escape doors and emergency exits	EN 179
Restoring spring	■
Fixable bearing	■
Steel base with positioning studs	■
Concealed through-screw technology	■
DIN left / right	■

■ Yes - No ◘ Option

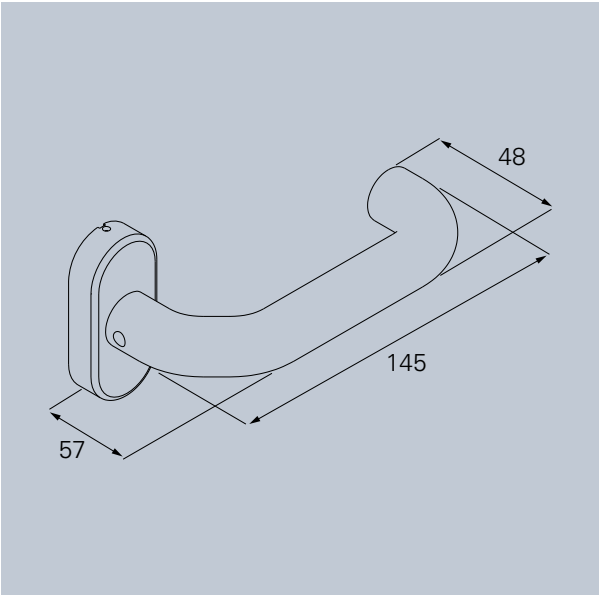

OGL

Material:

ER Stainless steel

Al Aluminium

3

PRODUCT FAMILY D-100

Standard handle

D-110 . Page 198

D-120 . Page 210

D-190 . Page 216

Handle on plate

D-110 . Page 201, 207

D-110 . Page 204

Oval rose handle

D-115 . Page 264

D-116 . Page 268

Security handle

D-110 . Page 298

D-111 . Page 308

D-116 . Page 320

Window handle

F-110 . Page 328

D-116 Oval rose handle

OGL

D-116 Oval rose with OGL – friction bearing technology

Lever guidance consists of a closed, maintenance-free friction bearing with self-lubricating plastic. Available with fixed knob or turnable knob and powerful locking (spring support).

Bore diametre of Ø 23 mm at the lever collar necessary.

User category: class 4

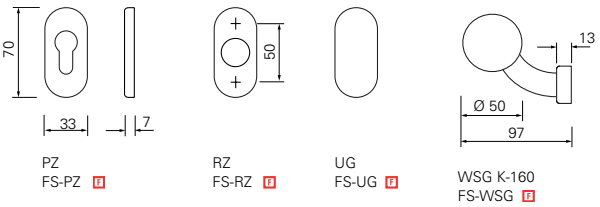

OGL – OVAL ROSE HANDLE

ER

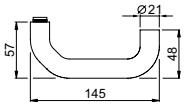

EN 1906 EN 179 F

OGL	∅	⧄		Kit sets				Knob		Escutcheon		
S	21 mm	8 mm	178402.46	186405.46	186415.46	186410.46	186425.46	178200.46	178202.46	176850.46	176852.46	176851.46
F	21 mm	9 mm	178400.46	386405.46	386415.46	386410.46	386425.46	178200.46	178204.46	176850.46	176852.46	176851.46

Finish: Stainless steel matt. PVD and polished on request

* Base rosette incl. fire-proof plate

AI

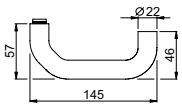

EN 1906 EN 179 F

OGL	∅	⧄		Kit sets				Knob		Escutcheon		
S	22 mm	8 mm	178402.30	187405.30	187415.30	187410.30	187425.30	178200.30	178202.30	176850.30	176852.30	176851.30
F	22 mm	9 mm	178400.30	387405.30	387415.30	387410.30	387425.30	178200.30	178204.30	176850.30	176852.30	176851.30

Finish: F1 Aluminium anodised and F9, further colours on request

*Base rosette incl. fire-proof plate

For door thickness 38 – 45 mm. Fire-proof lever sets for door thickness 40 – 65 mm. Please advise door thickness when ordering.

SWISSDOOR
DØRTEKNIK FOR PROFESSIONELLE

ECO **D-116**
The cranked U-form handle

A classic with value added: the advantage of the U-shaped handle lies in the second 90 degree bend. It was used traditionally to prevent people or material from getting "threaded on". The rear bend helps to prevent shopping bags or coat sleeves from getting caught in the handle.

The U-shaped handle also has comfort qualities, because the rear turn supports the ball of the hand when opening the door.

ECO Schulte has the U-shaped handle in its product range as factory design draft D-116 for profile frame doors.

Swissdoor ApS • Stenhuggervej 2 • 5471 Søndersø • Danmark Telefon +45 86 28 00 00 • mail@swissdoor.dk • www.swissdoor.dk

ECO **D-310**

Swissdoor ApS • Stenhuggervej 2 • 5471 Søndersø • Danmark Telefon +45 86 28 00 00 • mail@swissdoor.dk • www.swissdoor.dk

ECO **OVAL ROSE HANDLES · D-310**

EN 1906 F

ECO

Product characteristics

Tested acc. to	EN 1906
With 9 mm spindle tested Fire-protection tested	F
Lever form for escape doors and emergency exits	-
Restoring spring	■
Fixable bearing	■
Steel base with positioning studs	■
Concealed through-screw technology	■
DIN left / right	■

■ Yes - No ◘ Option

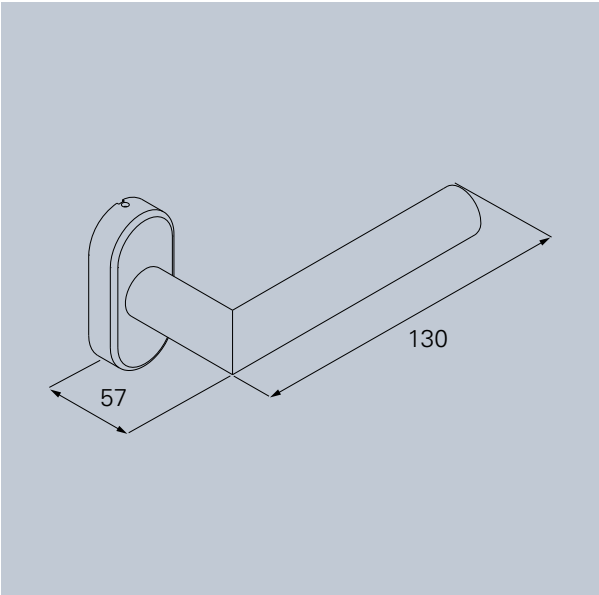

Material:

ER Stainless steel

OGL

PRODUCT FAMILY D-300

Standard handle

D-310 . Page 226

D-330 . Page 236

Handle on plate

D-330 . Page 239, 242

D-330 . Page 241

Oval rose handle

D-310 . Page 272

D-315 . Page 276

D-335 . Page 280

Security handle

D-310 . Page 312

D-315 . Page 324

Window handle

F-310 . Page 328

D-310 Oval rose handle

OGL

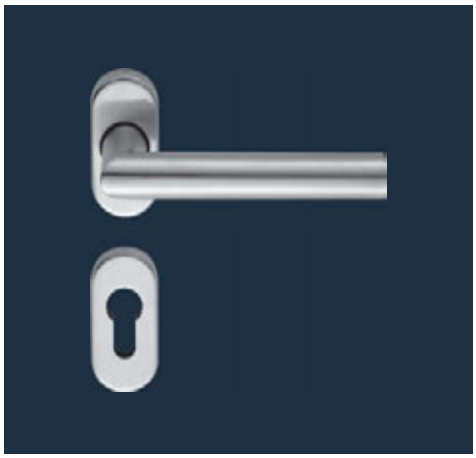

D-310 Oval rose with OGL – friction bearing technology

Lever guidance consists of a closed, maintenance-free friction bearing with self-lubricating plastic. Available with fixed knob or turnable knob and powerful locking (spring support).
Bore diametre of Ø 23 mm at the lever collar necessary.

User category: class 4

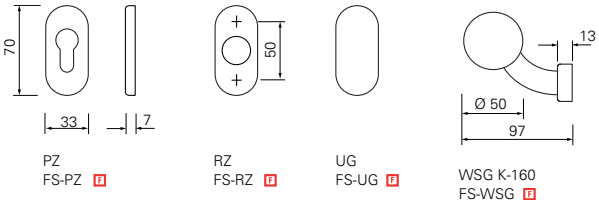

OGL – OVAL ROSE HANDLE

ER

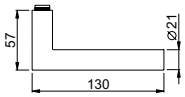

EN 1906 F

OGL	∅	⧄		Kit sets				Knob		Escutcheon		
S	21 mm	8 mm	178442.46	186305.46	186315.46	186310.46	186325.46	178200.46	178202.46	176850.46	176852.46	176851.46
F	21 mm	9 mm	178440.46	386305.46	386315.46	386310.46	386325.46	178200.46	178204.46	176850.46	176852.46	176851.46

Finish: Stainless steel matt. PVD and polished on request

*Base rosette incl. fire-proof plate

For door thickness 38 – 45 mm. Fire-proof lever sets for door thickness 40 – 65 mm. Please advise door thickness when ordering.

Swissdoor ApS • Stenhuggervej 2 • 5471 Søndersø • Danmark Telefon +45 86 28 00 00 • mail@swissdoor.dk • www.swissdoor.dk

SWISSDOOR
DØRTEKNIK FOR PROFESSIONELLE

ECO **D-300**
Frankfurt mitred handle

The ECO D-300 is a variation of a geometric handle draft design from the 1920s which stands out through the legible simplicity of the construction: a circular tube is separated with a mitred cut before the two halves are joined together again at right angles.

This handle was given the attribute "Frankfurt" not only through its close geometric relationship with the Frankfurt standard handle but also because it was used when the Frankfurt Architecture Museum was built.

ECO Schulte has included its interpretation of the Frankfurt mitred handle in its product range as factory design draft D-310 for profile frame doors.

ECO **D-315**

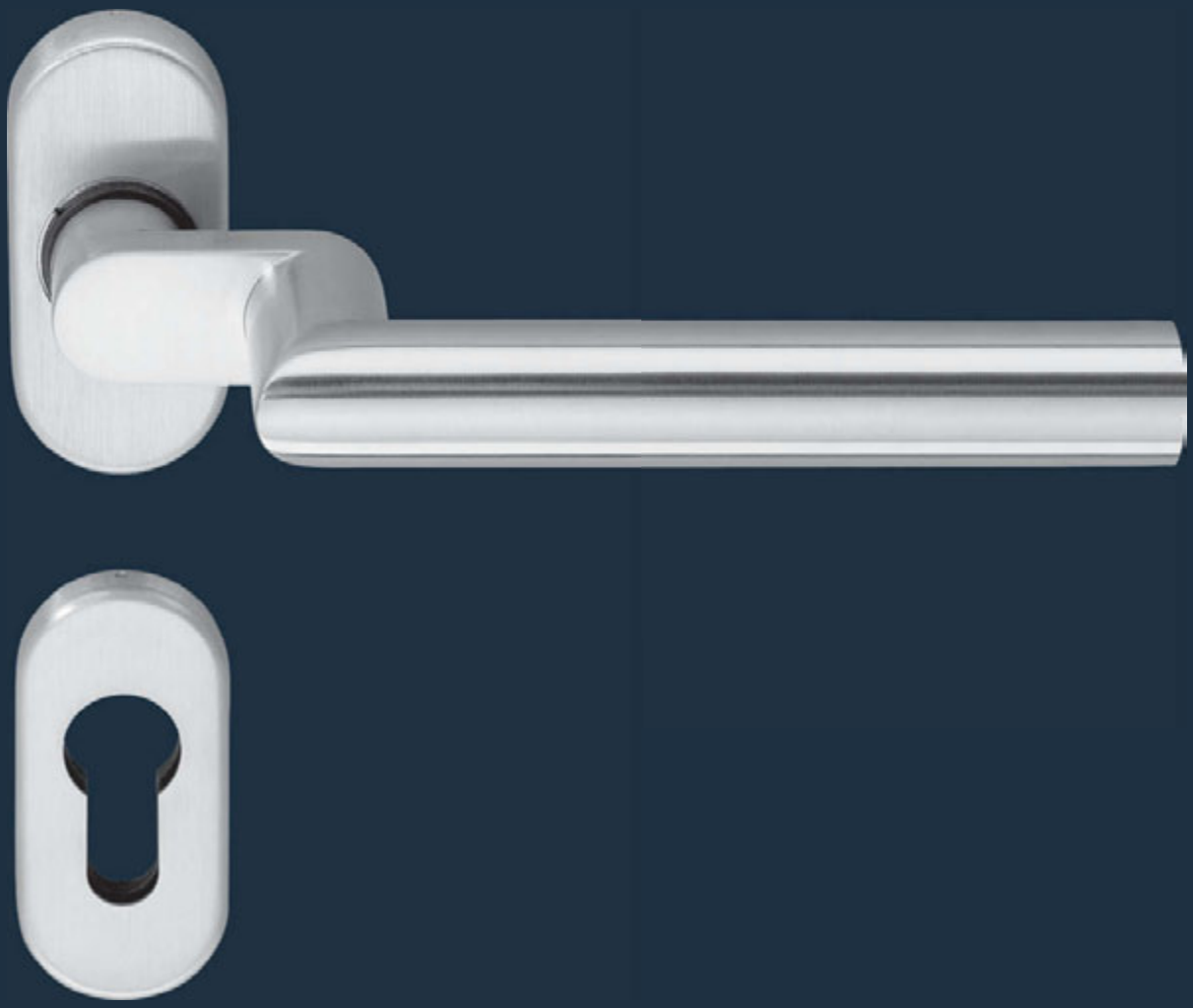

Swissdoor ApS • Stenhuggervej 2 • 5471 Søndersø • Danmark Telefon +45 86 28 00 00 • mail@swissdoor.dk • www.swissdoor.dk

ECO **OVAL ROSE HANDLES · D-315**

EN 1906 F

ECO

Product characteristics

Tested acc. to	EN 1906
With 9 mm spindle tested Fire-protection tested	F
Lever form for escape doors and emergency exits	-
Restoring spring	■
Fixable bearing	■
Steel base with positioning studs	■
Concealed through-screw technology	■
DIN left / right	■

■ Yes - No ◘ Option

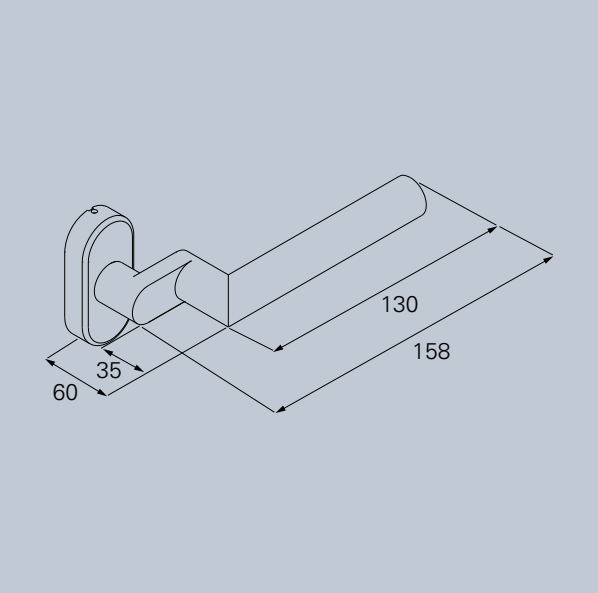

OGL

Material:

ER Stainless steel

3

PRODUCT FAMILY D-300

Standard handle

D-310 . Page 226

D-330 . Page 236

Handle on plate

D-330 . Page 239, 242

D-330 . Page 241

Oval rose handle

D-310 . Page 272

D-315 . Page 276

D-335 . Page 280

Security handle

D-310 . Page 312

D-315 . Page 324

Window handle

F-310 . Page 328

D-315 Oval rose handle

OGL

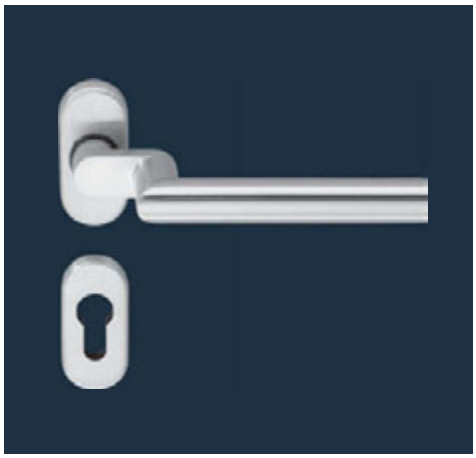

D-315 Oval rose with OGL – friction bearing technology

Lever guidance consists of a closed, maintenance-free friction bearing with self-lubricating plastic. Available with fixed knob or turnable knob and powerful locking (spring support).
Bore diametre of Ø 23 mm at the lever collar necessary.

User category: class 4

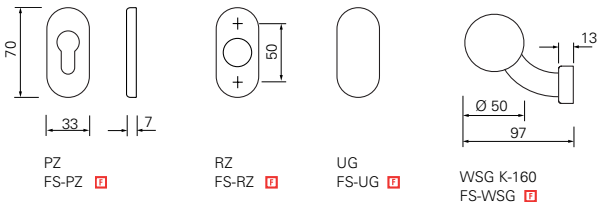

OGL – OVAL ROSE HANDLE

ER

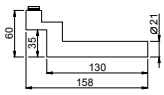

EN 1906 F

OGL	∅	⧄		Kit sets				Knob		Escutcheon		
S	21 mm	8 mm	178422.46	186305.46	186315.46	186310.46	186325.46	178200.46	178202.46	176850.46	176852.46	176851.46
F	21 mm	9 mm	178420.46	386305.46	386315.46	386310.46	386325.46	178200.46	178204.46	176850.46	176852.46	176851.46

Finish: Stainless steel matt. PVD and polished on request
*Base rosette incl. fire-proof plate

For door thickness 38 – 45 mm. Fire-proof lever sets for door thickness 40 – 65 mm. Please advise door thickness when ordering.

Swissdoor ApS • Stenhuggervej 2 • 5471 Søndersø • Danmark Telefon +45 86 28 00 00 • mail@swissdoor.dk • www.swissdoor.dk

SWISSDOOR
DØRTEKNIK FOR PROFESSIONELLE

ECO **D-300**
Frankfurt mitred handle

The ECO D-300 is a variation of a geometric handle draft design from the 1920s which stands out through the legible simplicity of the construction: a circular tube is separated with a mitred cut before the two halves are joined together again at right angles.

This handle was given the attribute "Frankfurt" not only through its close geometric relationship with the Frankfurt standard handle but also because it was used when the Frankfurt Architecture Museum was built.

ECO Schulte has included its interpretation of the Frankfurt mitred handle in its product range as factory design draft D-315 for profile frame doors.

Swissdoor ApS • Stenhuggervej 2 • 5471 Søndersø • Danmark Telefon +45 86 28 00 00 • mail@swissdoor.dk • www.swissdoor.dk

SWiSSDOOR
DØRTEKNIK FOR PROFESSIONELLE

ECO **D-335**

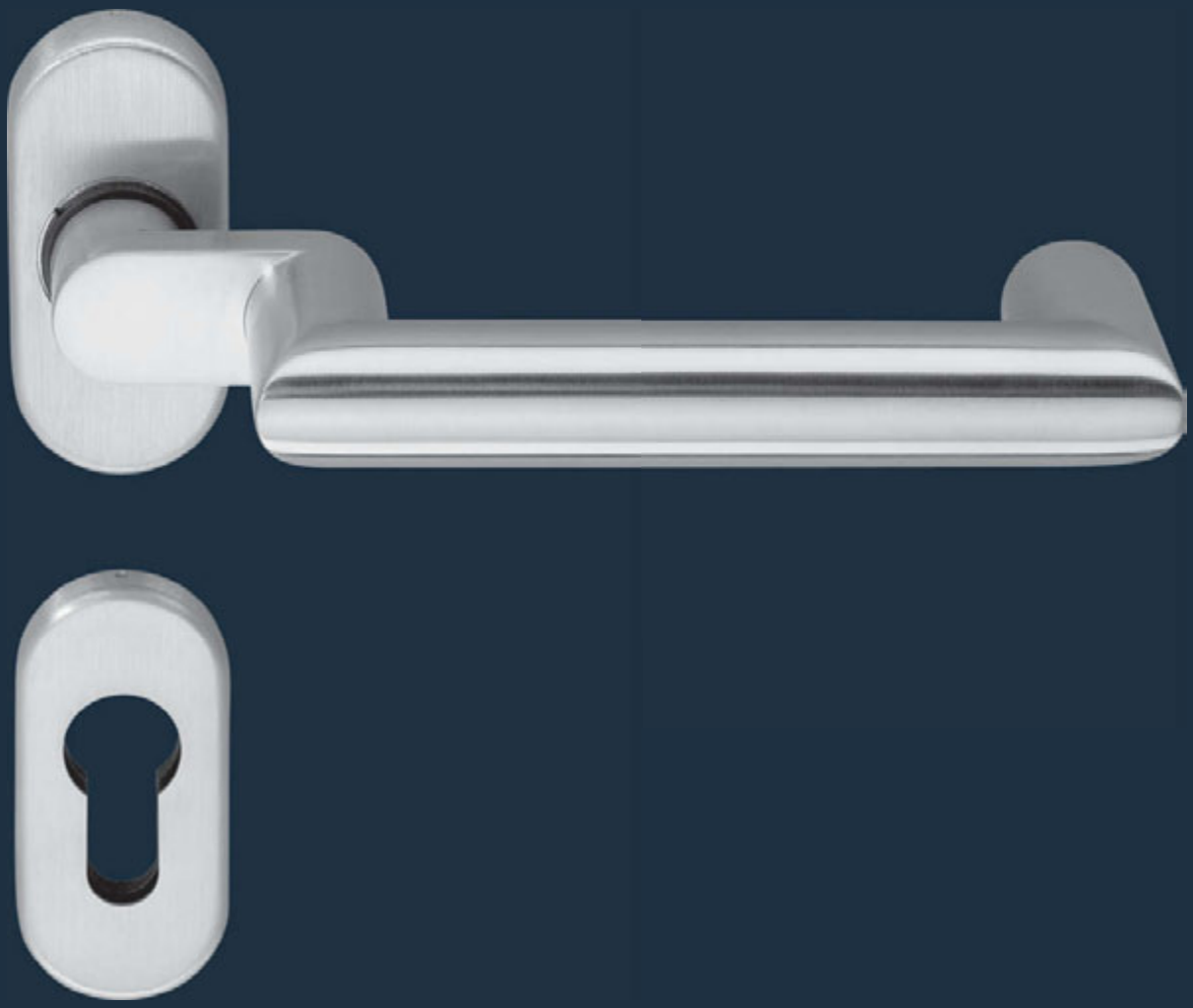

Swissdoor ApS • Stenhuggervej 2 • 5471 Søndersø • Danmark Telefon +45 86 28 00 00 • mail@swissdoor.dk • www.swissdoor.dk

ECO **OVAL ROSE HANDLES · D-335**

EN 1906 | EN 179 | F

ECO

Product characteristics

Tested acc. to	EN 1906
With 9 mm spindle tested Fire-protection tested	F
Lever form for escape doors and emergency exits	EN 179
Restoring spring	■
Fixable bearing	■
Steel base with positioning studs	■
Concealed through-screw technology	■
DIN left / right	■

■ Yes - No ◘ Option

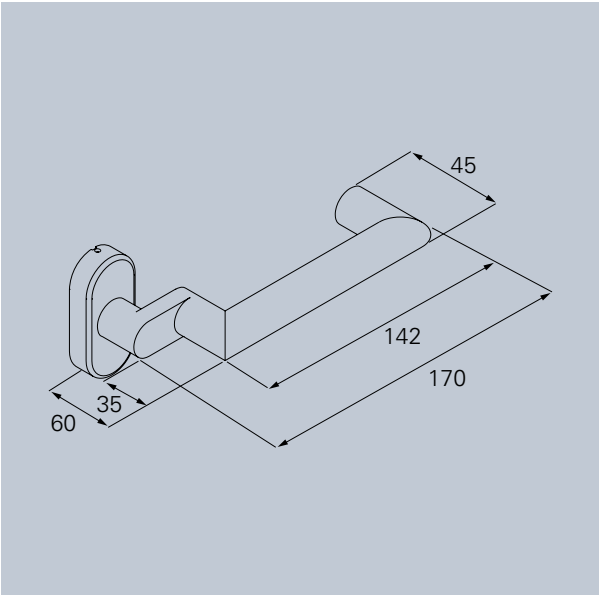

Material:

ER Stainless steel

OGL

PRODUCT FAMILY D-300

Standard handle

D-310 . Page 226

D-330 . Page 236

Handle sets

D-330 . Page 239, 242

D-330 . Page 241

Oval rose handle

D-310 . Page 272

D-315 . Page 276

D-335 . Page 280

Security handle

D-310 . Page 312

D-315 . Page 324

Window handle

F-310 . Page 328

3

D-335 Oval rose handle

OGL

D-335 Oval rose with OGL – friction bearing technology

Lever guidance consists of a closed, maintenance-free friction bearing with self-lubricating plastic. Available with fixed knob or turnable knob and powerful locking (spring support).
Bore diametre of Ø 23 mm at the lever collar necessary.

User category: class 4

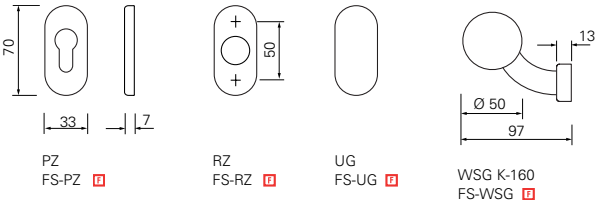

OGL – OVAL ROSE HANDLE

ER

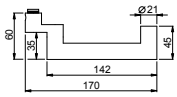

EN 1906 EN 179 F

OGL

	∅	⧄		Kit sets				Knob		Escutcheon		
S	21 mm	8 mm	178432.46	185305.46	185315.46	385340.46	185325.46	178200.46	178202.46	176850.46	176852.46	176851.46
F	21 mm	9 mm	178430.46	385305.46	385315.46	385310.46	385325.46	178200.46	178204.46	176850.46	176852.46	176851.46

Finish: Stainless steel matt. PVD and polished on request
*Base rosette incl. fire-proof plate

For door thickness 38 – 45 mm. Fire-proof lever sets for door thickness 40 – 65 mm. Please advise door thickness when ordering.

Swissdoor ApS • Stenhuggervej 2 • 5471 Søndersø • Danmark Telefon +45 86 28 00 00 • mail@swissdoor.dk • www.swissdoor.dk

SWiSSDOOR
DØRTEKNIK FOR PROFESSIONELLE

ECO **D-335**
The cranked U-form handle

The ECO D-300 is a variation of a geometric handle draft design from the 1920s which stands out through the legible simplicity of the construction: a circular tube is separated with a mitred cut before the two halves are joined together again at right angles. This handle was given the attribute "Frankfurt" not only through its close geometric relationship with the Frankfurt standard handle but also because it was used when the Frankfurt Architecture Museum was built.

ECO Schulte has included its interpretation of the Frankfurt mitred handle in its product range as factory design draft D-335 for profile frame doors.

Swissdoor ApS • Stenhuggervej 2 • 5471 Søndersø • Danmark Telefon +45 86 28 00 00 • mail@swissdoor.dk • www.swissdoor.dk

ECO **D-410**

Swissdoor ApS • Stenhuggervej 2 • 5471 Søndersø • Danmark Telefon +45 86 28 00 00 • mail@swissdoor.dk • www.swissdoor.dk

ECO **OVAL ROSE HANDLES · D-410**

EN 1906 | EN 179 | F

ECO

Product characteristics

Tested acc. to	EN 1906
With 9 mm spindle tested Fire-protection tested	F
Lever form for escape doors and emergency exits	EN 179
Restoring spring	■
Fixable bearing	■
Steel base with positioning studs	■
Concealed through-screw technology	■
DIN left / right	■

■ Yes - No ◘ Option

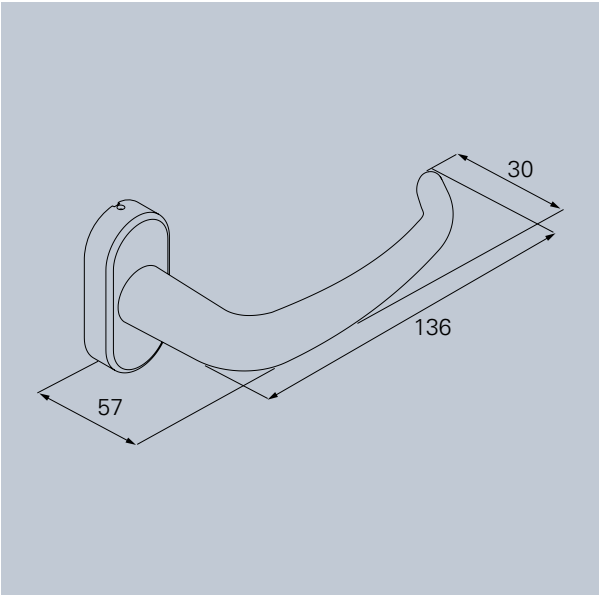

OGL

Material:

ER Stainless steel

3

PRODUCT FAMILY D-400

Standard handle

D-410 . Page 244

D-490 . Page 252

Oval rose handle

D-410 . Page 284

D-415 . Page 288

Window handle

F-410 . Page 328

D-410 Oval rose handle

OGL

D-410 Oval rose with OGL – friction bearing technology

Lever guidance consists of a closed, maintenance-free friction bearing with self-lubricating plastic. Available with fixed knob or turnable knob and powerful locking (spring support).
Bore diametre of Ø 23 mm at the lever collar necessary.

User category: class 4

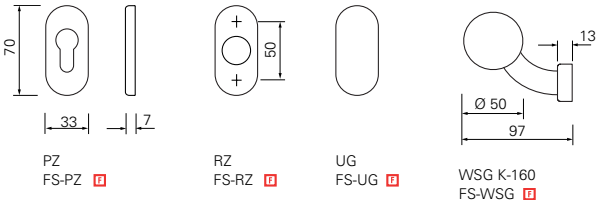

OGL – OVAL ROSE HANDLE

ER

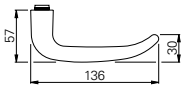

EN 1906 EN 179 F

OGL	∅	⧄		Kit sets				Knob		Escutcheon		
S	21 mm	8 mm	178462.46	185a05.46	185a15.46	185a10.46	185a25.46	178200.46	178202.46	176850.46	176852.46	176851.46
F	21 mm	9 mm	178460.46	385a05.46	385a15.46	385a10.46	385a25.46	178200.46	178204.46	176850.46	176852.46	176851.46

Finish: Stainless steel matt. PVD and polished on request
*Base rosette incl. fire-proof plate

For door thickness 38 – 45 mm. Fire-proof lever sets for door thickness 40 – 65 mm. Please advise door thickness when ordering.

Swissdoor ApS • Stenhuggervej 2 • 5471 Søndersø • Danmark Telefon +45 86 28 00 00 • mail@swissdoor.dk • www.swissdoor.dk

SWiSSDOOR
DØRTEKNIK FOR PROFESSIONELLE

ECO **D-400**
Archetype: Ulm handle

Made for getting to grips with! The archetype of this U-shaped handle was named after the Ulm School of Design where it was first used in the 1950s. The draft was based at the time on the door handles of the trains run by the Swiss railway.

ECO Schulte reworked the Ulm handle with its own factory design version D-410 for profile frame doors.

Swissdoor ApS • Stenhuggervej 2 • 5471 Søndersø • Danmark Telefon +45 86 28 00 00 • mail@swissdoor.dk • www.swissdoor.dk

SWiSSDOOR
DØRTEKNIK FOR PROFESSIONELLE

ECO **D-415**

Swissdoor ApS • Stenhuggervej 2 • 5471 Søndersø • Danmark Telefon +45 86 28 00 00 • mail@swissdoor.dk • www.swissdoor.dk

ECO **OVAL ROSE HANDLES · D-415**

EN 1906 | EN 179 | F

ECO

Product characteristics

Tested acc. to	EN 1906
With 9 mm spindle tested Fire-protection tested	F
Lever form for escape doors and emergency exits	EN 179
Restoring spring	■
Fixable bearing	■
Steel base with positioning studs	■
Concealed through-screw technology	■
DIN left / right	■

■ Yes - No ◘ Option

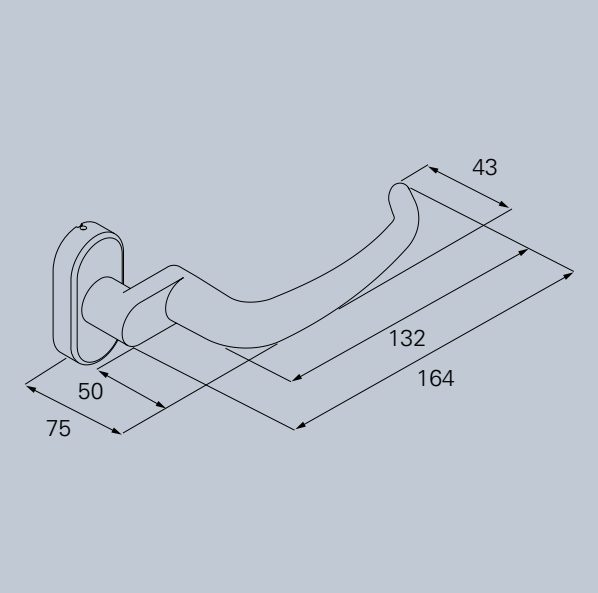

OGL

Material:

ER Stainless steel

3

PRODUCT FAMILY D-400

Standard handle

D-410 . Page 244

D-490 . Page 252

Oval rose handle

D-410 . Page 284

D-415 . Page 288

Window handle

F-410 . Page 328

D-415 Oval rose handle

OGL

D-415 Oval rose with OGL – friction bearing technology

Lever guidance consists of a closed, maintenance-free friction bearing with self-lubricating plastic. Available with fixed knob or turnable knob and powerful locking (spring support).
Bore diametre of Ø 23 mm at the lever collar necessary.

Utilization categories: class 4

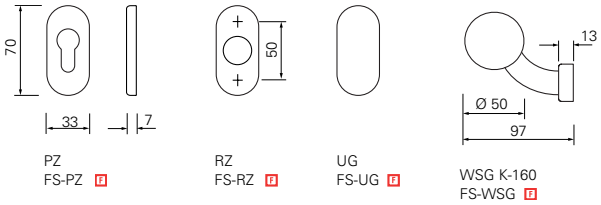

OGL – OVAL ROSE HANDLE

ER

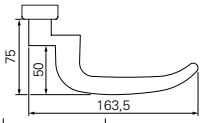

EN 1906 EN 179 F

OGL

	∅	⊠		Kit sets				Knob		Escutcheon		
S	21 mm	8 mm	178472.46	185105.46	185115.46	185110.46	185125.46	178200.46	178202.46	176850.46	176852.46	176851.46
F	21 mm	9 mm	178470.46	385105.46	385115.46	385110.46	385125.46	178200.46	178204.46	176850.46	176852.46	176851.46

Finish: Stainless steel matt. PVD and polished on request
*Base rosette incl. fire-proof plate

For door thickness 38 – 45 mm. Fire-proof lever sets for door thickness 40 – 65 mm. Please advise door thickness when ordering.

Swissdoor ApS • Stenhuggervej 2 • 5471 Søndersø • Danmark Telefon +45 86 28 00 00 • mail@swissdoor.dk • www.swissdoor.dk

SWISSDOOR
DØRTEKNIK FOR PROFESSIONELLE

ECO **D-415**
Archetype: Ulm handle

Made for getting to grips with! The archetype of this U-shaped handle was named after the Ulm School of Design where it was first used in the 1950s. The draft was based at the time on the door handles of the trains run by the Swiss railway.

ECO Schulte reworked the Ulm handle with its own factory design version D-415 for profile frame doors.

Swissdoor ApS • Stenhuggervej 2 • 5471 Søndersø • Danmark Telefon +45 86 28 00 00 • mail@swissdoor.dk • www.swissdoor.dk

SWiSSDOOR
DØRTEKNIK FOR PROFESSIONELLE

ECO **D-515**

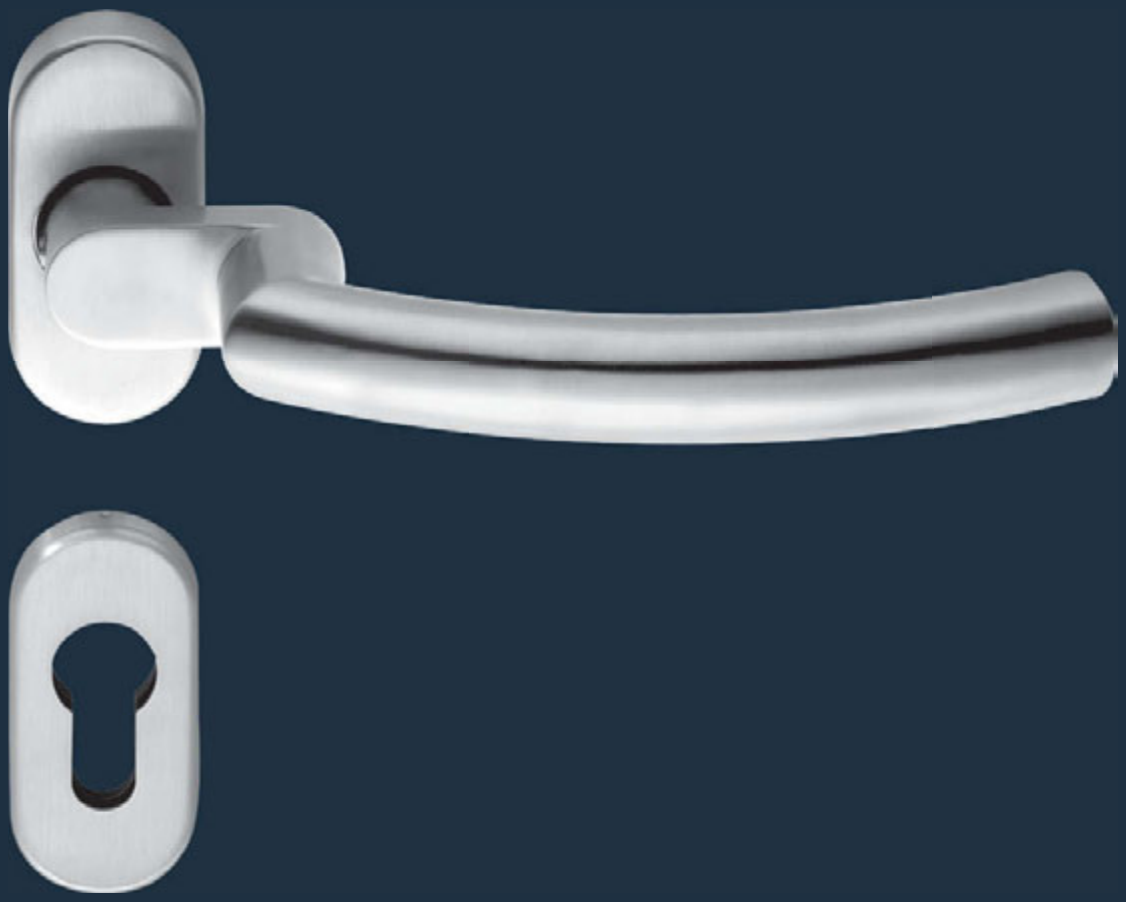

Swissdoor ApS • Stenhuggervej 2 • 5471 Søndersø • Danmark Telefon +45 86 28 00 00 • mail@swissdoor.dk • www.swissdoor.dk

ECO **OVAL ROSE HANDLES · D-515**

EN 1906 F

ECO

Product characteristics

Tested acc. to	EN 1906
With 9 mm spindle tested Fire-protection tested	F
Lever form for escape doors and emergency exits	-
Restoring spring	■
Fixable bearing	■
Steel base with positioning studs	■
Concealed through-screw technology	■
DIN left / right	■

■ Yes - No ◘ Option

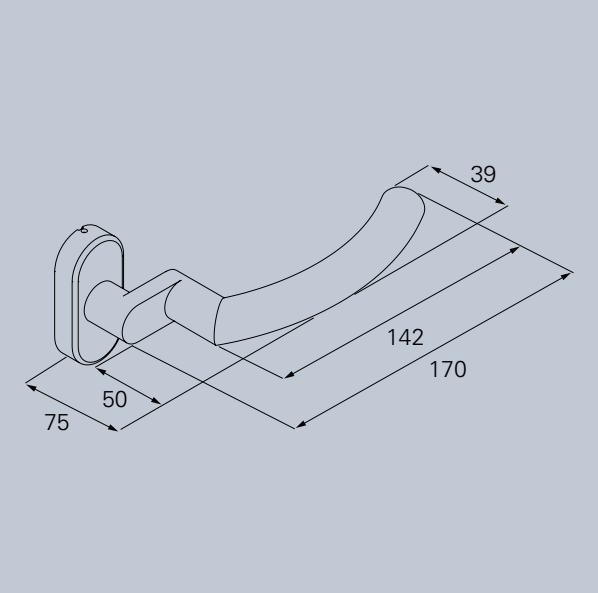

OGL

Material:

ER Stainless steel

3

PRODUCT FAMILY D-500

Standard handle	Handle on plate	Oval rose handle
D-510 . Page 256	D-510 . Page 260	D-515 . Page 292

D-515 Oval rose handle

OGL

D-515 Oval rose with OGL – friction bearing technology

Lever guidance consists of a closed, maintenance-free friction bearing with self-lubricating plastic. Available with fixed knob or turnable knob and powerful locking (spring support).
Bore diametre of Ø 23 mm at the lever collar necessary.

User category: class 4

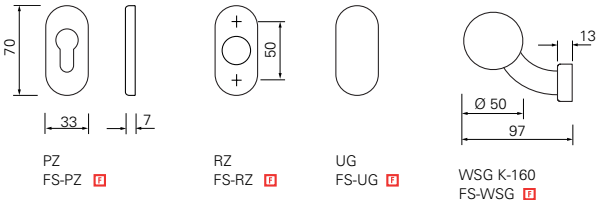

OGL – OVAL ROSE HANDLE

ER

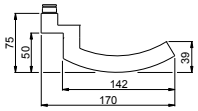

EN 1906 F

OGL	∅	⧄		Kit sets				Knob		Escutcheon		
S	21 mm	8 mm	178492.46	185905.46	185915.46	185920.46	185925.46	178200.46	178202.46	176850.46	176852.46	176851.46
F	21 mm	9 mm	178490.46	385905.46	385915.46	385910.46	385925.46	178200.46	178204.46	176850.46	176852.46	176851.46

Finish: Stainless steel matt. PVD and polished on request
*Base rosette incl. fire-proof plate

For door thickness 38 – 45 mm. Fire-proof lever sets for door thickness 40 – 65 mm. Please advise door thickness when ordering.

Swissdoor ApS • Stenhuggervej 2 • 5471 Søndersø • Danmark Telefon +45 86 28 00 00 • mail@swissdoor.dk • www.swissdoor.dk

SWiSSDOOR
DØRTEKNIK FOR PROFESSIONELLE

ECO **D-515**
Hand-shape handle

As far as the typology is concerned, this handle constitutes a connection between the Frankfurt mitred handle and the Ulm handle. The design of this factory design draft D-500 is discreet, easy to grip and orientated towards the direction of movement.

ECO Schulte reworked the Ulm handle with its own factory design version D-515 for profile frame doors.

Swissdoor ApS • Stenhuggervej 2 • 5471 Søndersø • Danmark Telefon +45 86 28 00 00 • mail@swissdoor.dk • www.swissdoor.dk

SWISSDOOR
DØRTEKNIK FOR PROFESSIONELLE

Security handle sets

Swissdoor ApS • Stenhuggervej 2 • 5471 Søndersø • Danmark Telefon +45 86 28 00 00 • mail@swissdoor.dk • www.swissdoor.dk

ECO **D-110 Security handle sets**

Swissdoor ApS • Stenhuggervej 2 • 5471 Søndersø • Danmark Telefon +45 86 28 00 00 • mail@swissdoor.dk • www.swissdoor.dk

ECO **SECURITY HANDLE SETS · D-110**

DIN 18 257 | EN 1906 | EN 179 | F

ECO

Product characteristics

Tested acc. to	EN 1906
With 9 mm spindle tested Fire-protection tested	F
Lever form for escape doors and emergency exits	EN 179
Tested acc. to	DIN 18 257
Fixable bearing	■
Steel base in inner and outer plate	■
Concealed through-screw technology	■
Inside with lever	■

■ Yes - No ◘ Option

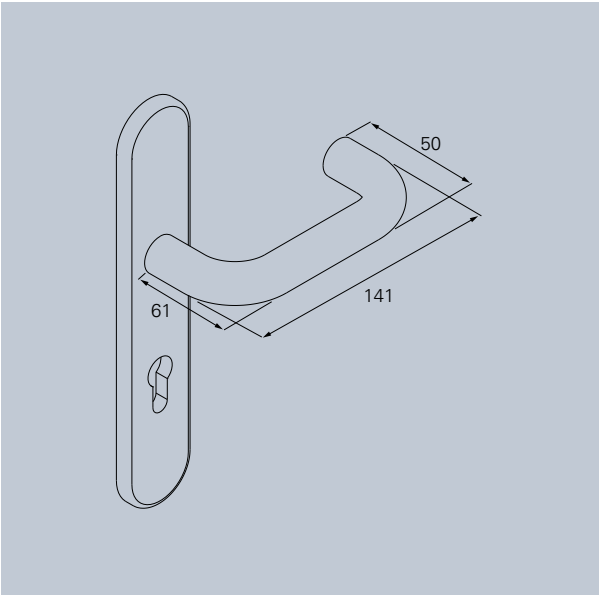

OGL

DIN Geprüft

Material:

ER Stainless steel

Al Aluminium

3

PRODUCT FAMILY D-100

Standard handle

D-110 . Page 198

D-120 . Page 210

D-190 . Page 216

Handle on plate

D-110 . Page 201, 207

D-110 . Page 204

Oval rose handle

D-115 . Page 264

D-116 . Page 268

Security handle

D-110 . Page 298

D-111 . Page 308

D-116 . Page 320

Window handle

F-110 . Page 328

D-110 Long plate security handle set ES 3

D-110 Long plate security handle set ES 3 with OGL
Fixed in maintenance-free bearing.
Anti-burglary protection class ES 3 / class 4.
Available with knob K-130 and grip plates G-160 and G-180.

User category: class 4
Outside: mounting height 15 mm
FS-92 on request

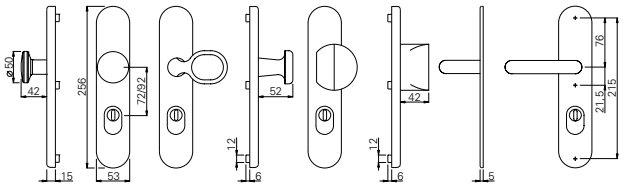

WSG K-130 FS-WSG ZA F | WSG G-160 FS-WSG ZA F | WSG G-180 FS-WSG ZA F

OGL – LONG PLATE SECURITY HANDLE SET

ER

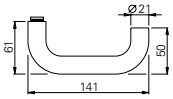

EN 1906 | EN 179 | F

OGL

	∅	Distance	⊠	Kit sets ZA			
S	21 mm	72 mm	8 mm	713312.46	713342.46	713322.46	713362.46
F	21 mm	72 mm	9 mm	763312.46	763342.46	763322.46	763362.46
⌂	21 mm	92 mm	10 mm	743512.46	743542.46	743522.46	743562.46

Finish: Stainless steel matt, further colours on request

AI

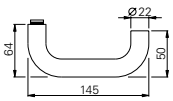

EN 1906 | EN 179 | F

OGL

	∅	Distance	⊠	Kit handles ZA			
S	22 mm	72 mm	8 mm	713312.30	713342.30	713322.30	713362.30
F	22 mm	72 mm	9 mm	763312.30	763342.30	763322.30	763362.30
⌂	22 mm	92 mm	10 mm	743512.30	743542.30	743522.30	743562.30

Finish: Aluminium anodised, further colours on request.

For door thickness 38 – 45 mm. Fire-proof lever sets for door thickness 40 – 65 mm. Please advise door thickness when ordering.

Swissdoor ApS • Stenhuggervej 2 • 5471 Søndersø • Danmark Telefon +45 86 28 00 00 • mail@swissdoor.dk • www.swissdoor.dk

D-110 Long plate security handle set ES 2

OGL

D-110 Long plate security handle set ES 2 with OGL
Fixed in maintenance-free bearing.
Anti-burglary protection class ES 2 / class 3.
Available with knob K-130 and grip plates G-160 and G-170.

User category: class 4
Outside: mounting height 15 mm (11 mm on request)
FS-92 on request

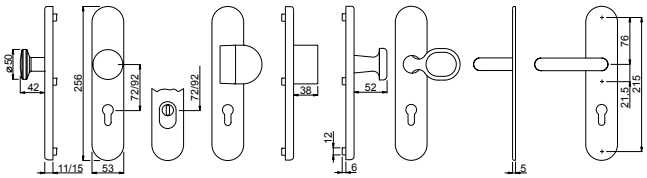

WSG K-130 FS-WSG F | PZ | ZA | WSG G-170 FS-WSG PZ F | WSG G-160 FS-WSG PZ F

OGL – LONG PLATE SECURITY HANDLE SET

ER

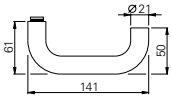

EN 1906 EN 179 F

OGL

	∅	Distance	⧄	Kit sets PZ				Kit sets ZA			
S	21 mm	72 mm	8 mm	712311.46	712341.46	712321.46	712361.46	712312.46	712342.46	712322.46	712362.46
F	21 mm	72 mm	9 mm	762311.46	762341.46	762321.46	762361.46	762312.46	762342.46	762322.46	762362.46
	21 mm	92 mm	10 mm	742511.46	742541.46	742521.46	742561.46	742512.46	742542.46	742522.46	742562.46

Finish: Stainless steel matt, further colours on request

AI

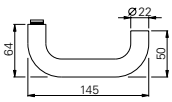

EN 1906 EN 179 F

OGL

	∅	Distance	⧄	Kit sets PZ				Kit sets ZA			
S	22 mm	72 mm	8 mm	712311.30	712341.30	712321.30	712361.30	712312.30	712342.30	712322.30	712362.30
F	22 mm	72 mm	9 mm	762311.30	762341.30	762321.30	762361.30	762312.30	762342.30	762322.30	762362.30
	22 mm	92 mm	10 mm	742511.30	742541.30	742521.30	742561.30	742512.30	742542.30	742522.30	742562.30

Finish: Aluminium anodised, further colours on request.

For door thickness 38 – 45 mm. Fire-proof lever sets for door thickness 40 – 65 mm. Please advise door thickness when ordering.

D-110 Long plate security handle set ES 2

D-110 Long plate security handle set ES 2 with OGL
Fixed in maintenance-free bearing.
Anti-burglary protection class ES 2 / class 3.
Available with knob K-130 and grip plate G-190.

User category: class 4
Outside: mounting height 15 mm (11 mm on request)
FS-92 on request

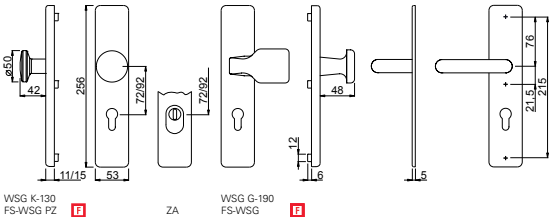

OGL – LONG PLATE SECURITY HANDLE SET

Al

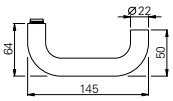

EN 1906 | EN 179 | F

OGL

	∅	Distance	⧄	Kit sets PZ			Kit sets ZA		
S	22 mm	72 mm	8 mm	718311.30	718341.30	718301.30	718312.30	718342.30	718302.30
F	22 mm	72 mm	9 mm	768311.30	768341.30	768301.30	768312.30	768342.30	768302.30
	22 mm	92 mm	10 mm	748511.30	748541.30	748501.30	748512.30	748542.30	748502.30

Finish: Aluminium anodised, further colours on request.

For door thickness 38 – 45 mm. Fire-proof lever sets for door thickness 40 – 65 mm. Please advise door thickness when ordering.

Swissdoor ApS • Stenhuggervej 2 • 5471 Søndersø • Danmark Telefon +45 86 28 00 00 • mail@swissdoor.dk • www.swissdoor.dk

D-110 Long plate security handle set ES 1

OGL

D-110 Long plate security handle set ES 1 with OGL
Fixed in maintenance-free bearing.
Anti-burglary protection class ES 1 / class 2.
Available with knob K-130 and grip plates G-160 and G-170.

User category: class 4
Outside: mounting height 15 mm (11 mm on request)
FS-92 on request

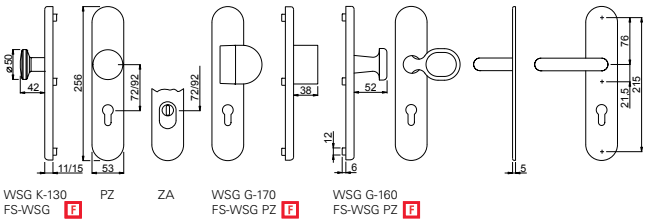

OGL – LONG PLATE SECURITY HANDLE SET

ER

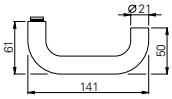

EN 1906 EN 179 F

OGL

	∅	Distance	⧄	Kit sets PZ				Kit sets ZA			
S	21 mm	72 mm	8 mm	711311.46	711341.46	711321.46	711371.46	711312.46	711342.46	711322.46	711372.46
F	21 mm	72 mm	9 mm	761311.46	761341.46	761321.46	761371.46	761312.46	761342.46	761322.46	761372.46
	21 mm	92 mm	10 mm	741511.46	741541.46	741521.46	741571.46	741512.46	741542.46	741522.46	741572.46

Finish: Stainless steel matt, further colours on request

AI

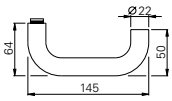

EN 1906 EN 179 F

OGL

	∅	Distance	⧄	Kit sets PZ				Kit sets ZA			
S	22 mm	72 mm	8 mm	711311.30	711341.30	711321.30	711371.30	711312.30	711342.30	711322.30	711372.30
F	22 mm	72 mm	9 mm	761311.30	761341.30	761321.30	761371.30	761312.30	761342.30	761322.30	761372.30
	22 mm	92 mm	10 mm	741511.30	741541.30	741521.30	741571.30	741512.30	741542.30	741522.30	741572.30

Finish: Aluminium anodised, further colours on request.

For door thickness 38 – 45 mm. Fire-proof lever sets for door thickness 40 – 65 mm. Please advise door thickness when ordering.

D-110 Long plate security handle set ES 1

D-110 Long plate security handle set ES 1 with OGL
Fixed in maintenance-free bearing.
Anti-burglary protection class ES 1 / class 2.
Available with knob K-130 and grip plate G-190.

User category: class 4
Outside: mounting height 15 mm (11 mm on request)
FS-92 on request

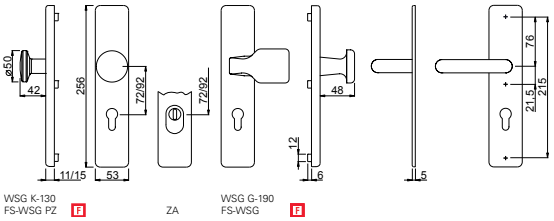

OGL – LONG PLATE SECURITY HANDLE SET

Al

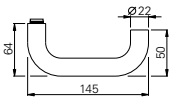

EN 1906 | EN 179 | F

OGL

	∅	Distance	⧄	Kit sets PZ			Kit sets ZA		
S	22 mm	72 mm	8 mm	717311.30	717341.30	717301.30	717312.30	717342.30	717302.30
F	22 mm	72 mm	9 mm	767311.30	767341.30	767301.30	767312.30	767342.30	767302.30
	22 mm	92 mm	10 mm	747511.30	747541.30	747501.30	747512.30	747542.30	747502.30

Finish: Aluminium anodised, further colours on request.

For door thickness 38 – 45 mm. Fire-proof lever sets for door thickness 40 – 65 mm. Please advise door thickness when ordering.

Swissdoor ApS • Stenhuggervej 2 • 5471 Søndersø • Danmark Telefon +45 86 28 00 00 • mail@swissdoor.dk • www.swissdoor.dk

D-110 Long plate security handle set ES 0

OGL

D-110 Long plate security handle set ES 0 with OGL
Anti-burglary protection class ES 0 / class 1.
Available with knob K-130 and grip plate G-160.

User category class 3
Outside: mounting height 13 mm on request.
FS-92 on request

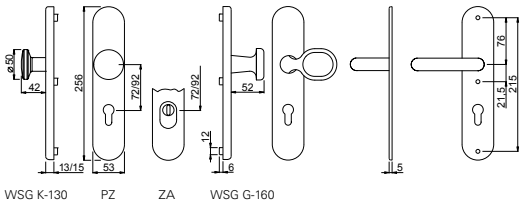

OGL – LONG PLATE SECURITY HANDLE SET

ER

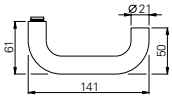

EN 1906 EN 179

OGL

	∅	Distance	⧄	Kit sets PZ			Kit sets ZA		
S	21 mm	72 mm	8 mm	715311.46	715341.46	715321.46	715312.46	715342.46	715322.46
⌂	21 mm	92 mm	10 mm				745512.46	745542.46	745522.46

Finish: Stainless steel matt, further colours on request

D-110 Long plate security handle set ES 0

D-110 Long plate security handle set ES 0 with OGL
Anti-burglary protection class ES 0 / class 1.
Available with knob K-130 and grip plate G-190.

User category class 3
Outside: mounting height 15 mm (11 mm on request.)

FS-92 on request.

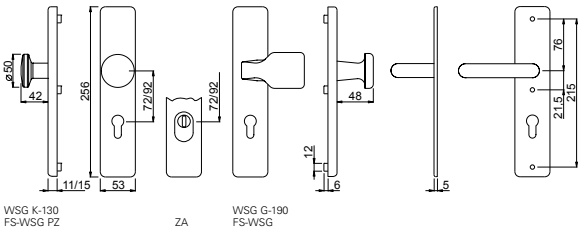

OGL – LONG PLATE SECURITY HANDLE SET

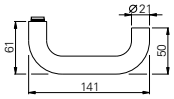

EN 1906 | EN 179

	∅	Distance	⧄	Kit sets PZ			Kit sets ZA		
S	21 mm	72 mm	8 mm	719311.46	719341.46	719321.46	719312.46	719342.46	719322.46
	21 mm	88 mm	8,5 mm	719911.46	719941.46	719921.46	719912.46	719942.46	719922.46
	21 mm	92 mm	10 mm				749512.46	749542.46	749522.46

Finish: Stainless steel matt, further colours on request

For door thickness 38 – 45 mm. Fire-proof lever sets for door thickness 40 – 65 mm. Please advise door thickness when ordering.

Swissdoor ApS • Stenhuggervej 2 • 5471 Søndersø • Danmark Telefon +45 86 28 00 00 • mail@swissdoor.dk • www.swissdoor.dk

D-110 Short plate security handle set ES 1 OGL

D-110 Short plate securtiy handle set ES 1 with OGL
Fixed in maintenance-free bearing.
Anti-burglary protection class ES1 / class 2.
Available with knob K-130.

User category class 4
Outside: mounting height 14 mm (11 mm on request.)
FS-92 on request

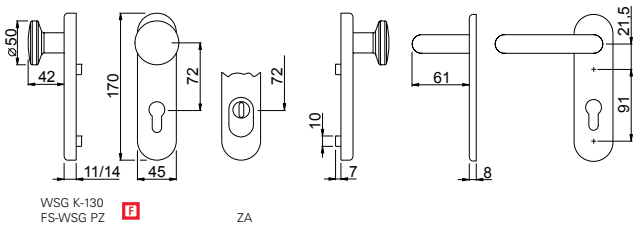

OGL – SHORT PLATE SECURITY HANDLE SET

ER

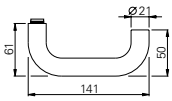

EN 1906 EN 179 F

OGL

	∅	Distance	⧄	Kit sets PZ		Kit sets ZA	
S	21 mm	72 mm	8 mm	714311.46	714341.46	714312.46	714342.46
F	21 mm	72 mm	9 mm	764311.46	764341.46	764312.46	764342.46

Finish: Stainless steel matt, further colours on request

AI

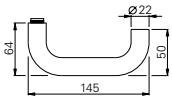

EN 1906 EN 179 F

OGL

	∅	Distance	⧄	Kit sets PZ		Kit sets ZA	
S	22 mm	72 mm	8 mm	714311.30	714341.30	714312.30	714342.30
F	22 mm	72 mm	9 mm	764311.30	764341.30	764312.30	764342.30

Finish: Aluminium anodised, further colours on request.

For door thickness 38 – 45 mm. Fire-proof lever sets for door thickness 40 – 65 mm. Please advise door thickness when ordering.

ECO **D-111 Security handle sets**

Swissdoor ApS • Stenhuggervej 2 • 5471 Søndersø • Danmark Telefon +45 86 28 00 00 • mail@swissdoor.dk • www.swissdoor.dk

ECO **SECURITY HANDLE SETS · D-111**

DIN 18 257 | EN 1906

ECO

Product characteristics

Tested acc. to	EN 1906
With 9 mm spindle tested Fire-protection tested	■
Lever form for escape doors and emergency exits	EN 179
Tested acc. to	DIN 18 257
Fixable bearing	■
Steel base in inner and outer plate	■
Concealed through-screw technology	■
Inside with lever	■

■ Yes - No ◘ Option

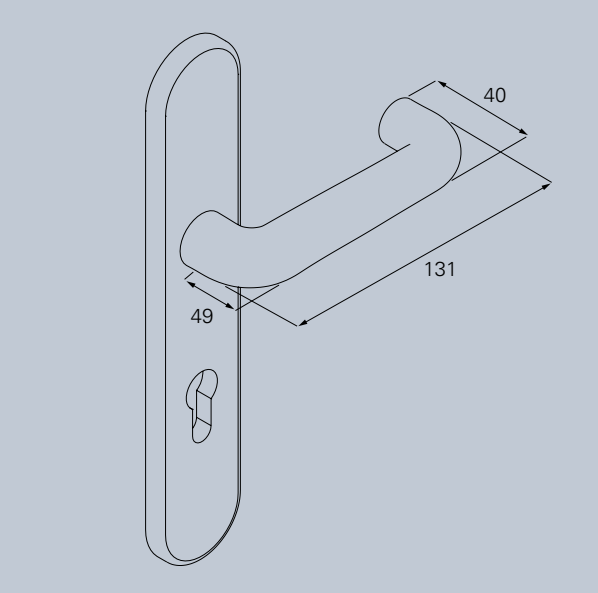

OGL

DIN Geprüft

Material:

Al Aluminium

3

PRODUCT FAMILY D-100

Standard handle

D-110 . Page 198

D-120 . Page 210

D-190 . Page 216

Handle on plate

D-110 . Page 201, 207

D-110 . Page 204

Oval rose handle

D-115 . Page 264

D-116 . Page 268

Security handle

D-110 . Page 298

D-111 . Page 308

D-116 . Page 320

Window handle

F-110 . Page 328

D-111 Long plate security handle set ES 2

D-111 Long plate security handle set ES 2 with OGL
Aluminium profile frame fitting fixed in maintenance-free bearing.
Anti-burglary protection class ES2 / class 3.
Available with grip plates G-140 and G-170.

User category: class 3
Outside: Mounting height 12 mm
FS-92 on request

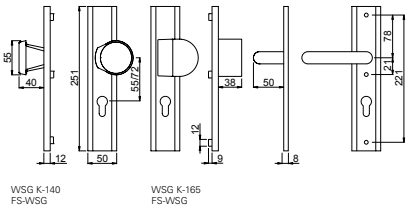

OGL – LONG PLATE SECURITY HANDLE SET

Al

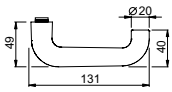

EN 1906

OGL

	∅	Distance	⧄	Kit sets PZ			Kit sets ZA		
S	20 mm	55 mm	8 mm	717011.30	717051.30	717071.30	717012.30	717052.30	717072.30
	20 mm	72 mm	8 mm	717211.30	717251.30	717271.30	717212.30	717252.30	717272.30

Finish: Aluminium anodised, further colours on request.

For door thickness 38 – 45 mm. Fire-proof lever sets for door thickness 40 – 65 mm. Please advise door thickness when ordering.

Swissdoor ApS • Stenhuggervej 2 • 5471 Søndersø • Danmark Telefon +45 86 28 00 00 • mail@swissdoor.dk • www.swissdoor.dk

D-111 Long plate security handle set ES 0

OGL

D-111 Long plate security handle set ES 0 with OGL
Anti-burglary protection class ES 0 / class 1.
Available with knob K-130 and grip plate G-160.

User category class 3
Outside: Mounting height 13 mm on request. PZ hole with nylon insert.
FS-92 on request

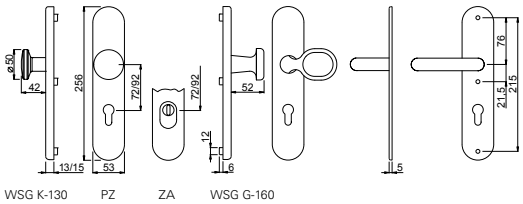

OGL – LONG PLATE SECURITY HANDLE SET

Al

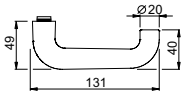

EN 1906

OGL

	∅	Distance	⧄	Kit sets PZ			Kit sets ZA		
S	20 mm	72 mm	8 mm	715311.30	715341.30	715321.30	715312.30	715342.30	715322.30
	20 mm	88 mm	8,5 mm	715911.30	715941.30	715921.30	715912.30	715942.30	715922.30
	20 mm	92 mm	10 mm				745512.30	745542.30	745522.30

Finish: Aluminium anodised, further colours on request.

3

For door thickness 38 – 45 mm. Fire-proof lever sets for door thickness 40 – 65 mm. Please advise door thickness when ordering.

ECO **D-310 Security handle sets**

Swissdoor ApS • Stenhuggervej 2 • 5471 Søndersø • Danmark Telefon +45 86 28 00 00 • mail@swissdoor.dk • www.swissdoor.dk

ECO **SECURITY HANDLE SETS · D-310**

DIN 18 257 | EN 1906 | F

ECO

Product characteristics

Tested acc. to	EN 1906
With 9 mm spindle tested Fire-protection tested	F
Tested acc. to	DIN 18 257
Fixable bearing	■
Steel base in inner and outer plate	■
Concealed through-screw technology	■
Inside with lever	■

■ Yes - No ◘ Option

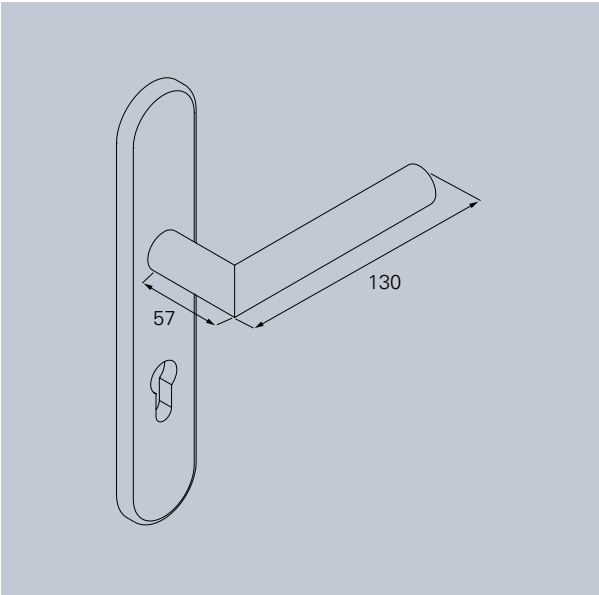

Material:

ER Stainless steel

Al Aluminium

PRODUCT FAMILY D-300

Standard handle

D-310 . Page 226

D-330 . Page 236

Handle on plate

D-330 . Page 239, 242

D-330 . Page 241

Oval rose handle

D-310 . Page 272

D-315 . Page 276

D-335 . Page 280

Security handle

D-310 . Page 312

D-315 . Page 324

Window handle

F-310 . Page 328

3

D-310 Long plate security handle set ES 3

OGL

D-310 Long plate security handle set ES 3 with OGL
Fixed in maintenance-free bearing.
Anti-burglary protection class ES 3 / class 4.
Available with knob K-130 and grip plates G-160 and G-180.

User category: class 4
Outside: mounting height 15 mm
FS-92 on request

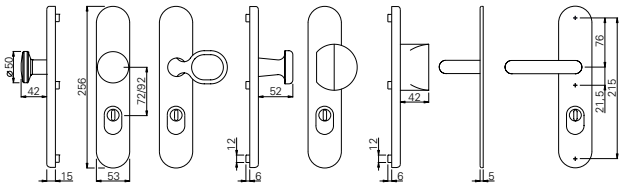

WSG K-130 FS-WSG ZA F | WSG G-160 FS-WSG ZA F | WSG G-180 FS-WSG ZA F

OGL – LONG PLATE SECURITY HANDLE SET

ER

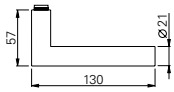

EN 1906 F

OGL

	∅	Distance	⧄	Kit sets ZA			
S	21 mm	72 mm	8 mm	733312.46	733342.46	733322.46	733362.46
F	21 mm	72 mm	9 mm	783312.46	783342.46	783322.46	783362.46
⌂	21 mm	92 mm	10 mm	703512.46	703542.46	703522.46	703562.46

Finish: Stainless steel matt, further colours on request

AI

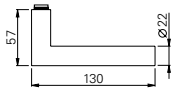

EN 1906 F

OGL

	∅	Distance	⧄	Kit sets ZA			
S	22 mm	72 mm	8 mm	733312.30	733342.30	733322.30	733362.30
F	22 mm	72 mm	9 mm	783312.30	783342.30	783322.30	783362.30
⌂	22 mm	92 mm	10 mm	703512.30	703542.30	703522.30	703562.30

Finish: Aluminium anodised, further colours on request.

For door thickness 38 – 45 mm. Fire-proof lever sets for door thickness 40 – 65 mm. Please advise door thickness when ordering.

Swissdoor ApS • Stenhuggervej 2 • 5471 Søndersø • Danmark Telefon +45 86 28 00 00 • mail@swissdoor.dk • www.swissdoor.dk

D-310 Long plate security handle set ES 2 OGL

D-310 Long plate security handle set ES 2 with OGL
Fixed in maintenance-free bearing.
Anti-burglary protection class ES 2 / class 3.
Available with knob K-130 and grip plates G-160 and G-170.

User category: class 4
Outside: mounting height 15 mm (11 mm on request)
FS-92 on request

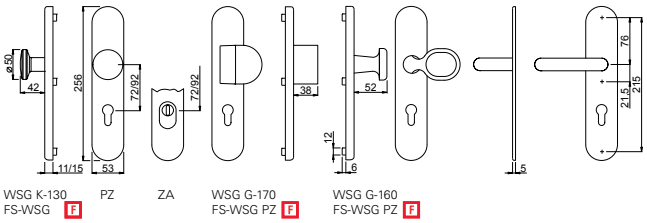

OGL – LONG PLATE SECURITY HANDLE SET

ER

EN 1906 F

OGL

	∅	Distance	⧄	Kit sets PZ				Kit sets ZA			
S	21 mm	72 mm	8 mm	732311.46	732341.46	732321.46	732361.46	732312.46	732342.46	732322.46	732362.46
F	21 mm	72 mm	9 mm	782311.46	782341.46	782321.46	782361.46	782312.46	782342.46	782322.46	782362.46
	21 mm	92 mm	10 mm	702511.46	702541.46	702521.46	702561.46	702512.46	702542.46	702522.46	702562.46

Finish: Stainless steel matt, further colours on request

AI

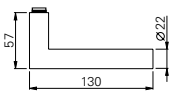

EN 1906 F

OGL

	∅	Distance	⧄	Kit sets PZ				Kit sets ZA			
S	22 mm	72 mm	8 mm	732311.30	732341.30	732321.30	732361.30	732312.30	732342.30	732322.30	732362.30
F	22 mm	72 mm	9 mm	782311.30	782341.30	782321.30	782361.30	782312.30	782342.30	782322.30	782362.30
	22 mm	92 mm	10 mm	702511.30	702541.30	702521.30	702561.30	702512.30	702542.30	702522.30	702562.30

Finish: Aluminium anodised, further colours on request.

For door thickness 38 – 45 mm. Fire-proof lever sets for door thickness 40 – 65 mm. Please advise door thickness when ordering.

D-310 Long plate security handle set ES 2

D-310 Long plate security handle set ES 2 with OGL
Fixed in maintenance-free bearing.
Anti-burglary protection class ES 2 / class 3.
Available with knob K-130 and grip plate G-190.

User category: class 4
Outside: mounting height 15 mm (11 mm on request)
FS-92 on request

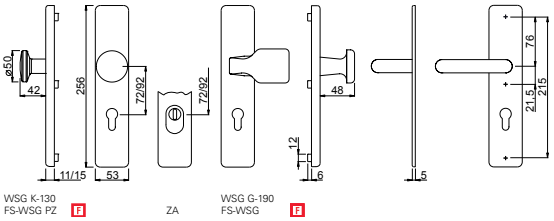

OGL – LONG PLATE SECURITY HANDLE SET

EN 1906 F

	∅	Distance	⧄	Kit sets PZ			Kit sets ZA		
S	22 mm	72 mm	8 mm	738311.30	738341.30	738301.30	738312.30	738342.30	738302.30
F	22 mm	72 mm	9 mm	788311.30	788341.30	788301.30	788312.30	788342.30	788302.30
	22 mm	92 mm	10 mm	708511.30	708541.30	708501.30	708512.30	708542.30	708502.30

Finish: Aluminium anodised, further colours on request.

For door thickness 38 – 45 mm. Fire-proof lever sets for door thickness 40 – 65 mm. Please advise door thickness when ordering.

Swissdoor ApS • Stenhuggervej 2 • 5471 Søndersø • Danmark Telefon +45 86 28 00 00 • mail@swissdoor.dk • www.swissdoor.dk

D-310 Long plate security handle set ES 1 OGL

D-310 Long plate security handle set ES 1 with OGL
Fixed in maintenance-free bearing.
Anti-burglary protection class ES 1 / class 2.
Available with knob K-130 and grip plates G-160 and G-170.

User category: class 4
Outside: mounting height 15 mm (11 mm on request)
FS-92 on request

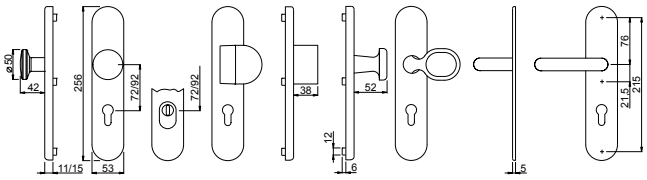

WSG K-130 FS-WSG F | PZ | ZA | WSG G-170 FS-WSG PZ F | WSG G-160 FS-WSG PZ F

OGL – LONG PLATE SECURITY HANDLE SET

ER

EN 1906 F

OGL

	∅	Distance	⧄	Kit sets PZ				Kit sets ZA			
S	21 mm	72 mm	8 mm	731311.46	731341.46	731321.46	731371.46	731312.46	731342.46	731322.46	731372.46
F	21 mm	72 mm	9 mm	781311.46	781341.46	781321.46	781371.46	781312.46	781342.46	781322.46	781372.46
	21 mm	92 mm	10 mm	701511.46	701541.46	701521.46	701571.46	701512.46	701542.46	701522.46	701572.46

Finish: Stainless steel matt, further colours on request

AI

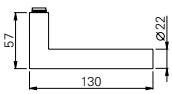

EN 1906 F

OGL

	∅	Distance	⧄	Kit sets PZ				Kit sets ZA			
S	22 mm	72 mm	8 mm	731311.30	731341.30	731321.30	731371.30	731312.30	731342.30	731322.30	731372.30
F	22 mm	72 mm	9 mm	781311.30	781341.30	781321.30	781371.30	781312.30	781342.30	781322.30	781372.30
	22 mm	92 mm	10 mm	701511.30	701541.30	701521.30	701571.30	701512.30	701542.30	701522.30	701572.30

Finish: Aluminium anodised, further colours on request.

For door thickness 38 – 45 mm. Fire-proof lever sets for door thickness 40 – 65 mm. Please advise door thickness when ordering.

D-310 Long plate security handle set ES 1

D-310 long plate security handle set ES 1 with OGL
Fixed in maintenance-free bearing.
Anti-burglary protection class ES 1 / class 2.
Available with knob K-130 and grip plate G-190.

User category: class 4
Outside: mounting height 15 mm (11 mm on request)
FS-92 on request

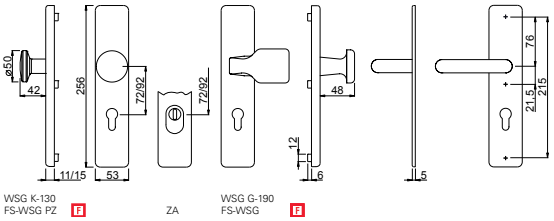

OGL – LONG PLATE SECURITY HANDLE SET

EN 1906 F

	∅	Distance	⧄	Kit sets PZ			Kit sets ZA		
S	22 mm	72 mm	8 mm	737311.30	737341.30	737301.30	737312.30	737342.30	737302.30
F	22 mm	72 mm	9 mm	787311.30	787341.30	787301.30	787312.30	787342.30	787302.30
	22 mm	92 mm	10 mm	707511.30	707541.30	707501.30	707512.30	707542.30	707502.30

Finish: Aluminium anodised, further colours on request.

For door thickness 38 – 45 mm. Fire-proof lever sets for door thickness 40 – 65 mm. Please advise door thickness when ordering.

Swissdoor ApS • Stenhuggervej 2 • 5471 Søndersø • Danmark Telefon +45 86 28 00 00 • mail@swissdoor.dk • www.swissdoor.dk

D-310 Short plate security handle set ES 1

OGL

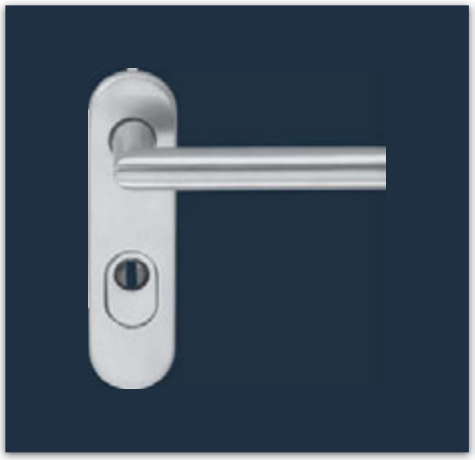

D-310 Short plate security handle set ES 1 with OGL
Fixed in maintenance-free bearing.
Anti-burglary protection class ES 1 / class 2.
Available with knob K-130.

User category: class 4
Outside: mounting height 14 mm (11 mm on request)

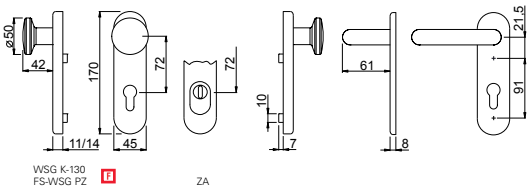

OGL – SHORT PLATE SECURITY HANDLE SET

ER

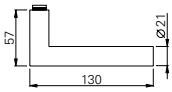

EN 1906 F

OGL

	∅	Distance	⧄	Kit sets PZ		Kit sets ZA	
S	21 mm	72 mm	8 mm	734311.46	734341.46	734312.46	734342.46
F	21 mm	72 mm	9 mm	784311.46	784341.46	784312.46	784342.46

Finish: Stainless steel matt, further colours on request

AI

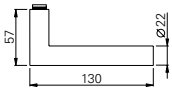

EN 1906 F

OGL

	∅	Distance	⧄	Kit sets PZ		Kit sets ZA	
S	22 mm	72 mm	8 mm	734311.30	734341.30	734312.30	734342.30
F	22 mm	72 mm	9 mm	784311.30	784341.30	784312.30	784342.30

Finish: Aluminium anodised, further colours on request.

For door thickness 38 – 45 mm. Fire-proof lever sets for door thickness 40 – 65 mm. Please advise door thickness when ordering.

ECO **D-116**

Swissdoor ApS • Stenhuggervej 2 • 5471 Søndersø • Danmark Telefon +45 86 28 00 00 • mail@swissdoor.dk • www.swissdoor.dk

ECO **SECURITY HANDLE SET FOR PROFILE FRAME DOORS ES 1 · D-116**

EN 179 EN 1906 F

ECO

Product characteristics

Tested acc. to	EN 1906
With 9 mm spindle tested Fire-protection tested	F
Lever form for escape doors and emergency exits	EN 179
Tested acc. to	DIN 18 257
Fixable bearing	■
Steel base in inner and outer plate	■
Concealed continous triple screw connection.	■
Inside with lever	■
DIN left / right	■

■ Yes - No ◘ Option

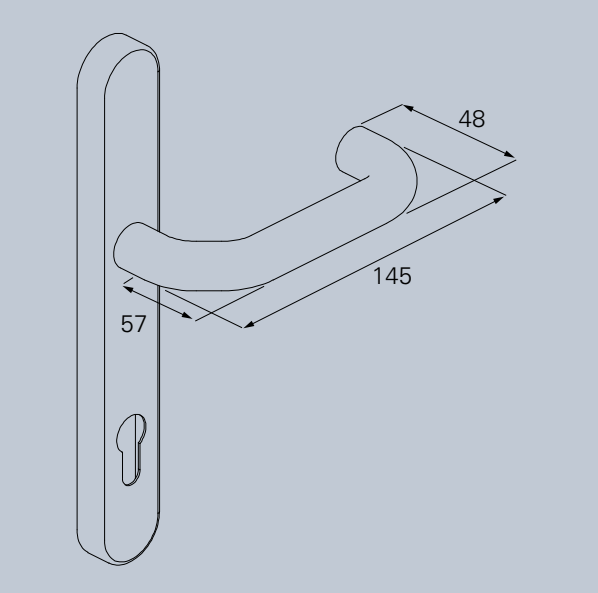

OGL

DIN Geprüft

Material:

ER Stainless steel

Al Aluminium

3

PRODUCT FAMILY D-100

Standard handle

D-110 . Page 198

D-120 . Page 210

D-190 . Page 216

Handle on plate

D-110 . Page 201, 207

D-110 . Page 204

Oval rose handle

D-115 . Page 264

D-116 . Page 268

Security handle

D-110 . Page 298

D-111 . Page 308

Window handle

D-116 . Page 320

F-110 . Page 328

D-116 Security handle set for profile frame doors OGL

D-116 Security handle set for profile frame doors with OGL – friction bearing technology
Fixed in maintenance-free bearing.
Anti-burglary protection class ES 1 / class 2.
Available with knob K-160.

User category: class 4
Outside: mounting height 15 mm
Distance: 72 mm also available as FS version with 9 mm spindle

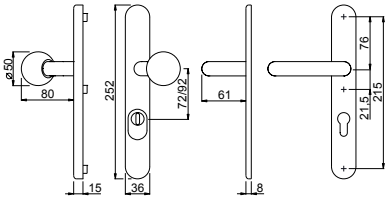

WSG K-160
FS-WSG ZA F

PZ

OGL – SECURITY HANDLE SET FOR PROFILE FRAME DOORS

ER

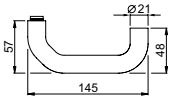

EN 1906 EN 179 F

OGL

	∅	Distance	⧄	Kit sets PZ		Kit sets ZA	
S	21 mm	72 mm	8 mm	822311.46	822341.46	822312.46	822342.46
F	21 mm	92 mm	9 mm	824511.46	824541.46	824512.46	824542.46
⌂	21 mm	92 mm	10 mm	826511.46	826541.46	826512.46	826542.46

Finish: Stainless steel matt, further colours on request

AI

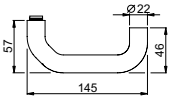

EN 1906 EN 179 F

	∅	Distance	⧄	Kit sets PZ		Kit sets ZA	
S	22 mm	72 mm	8 mm	822311.30	822341.30	822312.30	822342.30
F	22 mm	92 mm	9 mm	824511.30	824541.30	824512.30	824542.30
⌂	22 mm	92 mm	10 mm	826511.30	826541.30	826512.30	826542.30

Finish: Aluminium anodised, further colours on request.

For door thickness 38 – 45 mm. Fire-proof lever sets for door thickness 40 – 65 mm. Please advise door thickness when ordering.

Swissdoor ApS • Stenhuggervej 2 • 5471 Søndersø • Danmark Telefon +45 86 28 00 00 • mail@swissdoor.dk • www.swissdoor.dk

SWiSSDOOR
DØRTEKNIK FOR PROFESSIONELLE

ECO **D-100**
U-shaped handle

A classic with value added: the advantage of the U-shaped handle lies in the second 90 degree bend. It was used traditionally to prevent people or material from getting "threaded on". The rear bend helps to prevent shopping bags or coat sleeves from getting caught in the handle.

The U-shaped handle also has comfort qualities, because the rear turn supports the ball of the hand when opening the door.

ECO Schulte has the U-shaped handle in its product range as factory design draft D-116

Swissdoor ApS • Stenhuggervej 2 • 5471 Søndersø • Danmark Telefon +45 86 28 00 00 • mail@swissdoor.dk • www.swissdoor.dk

ECO **D-315**

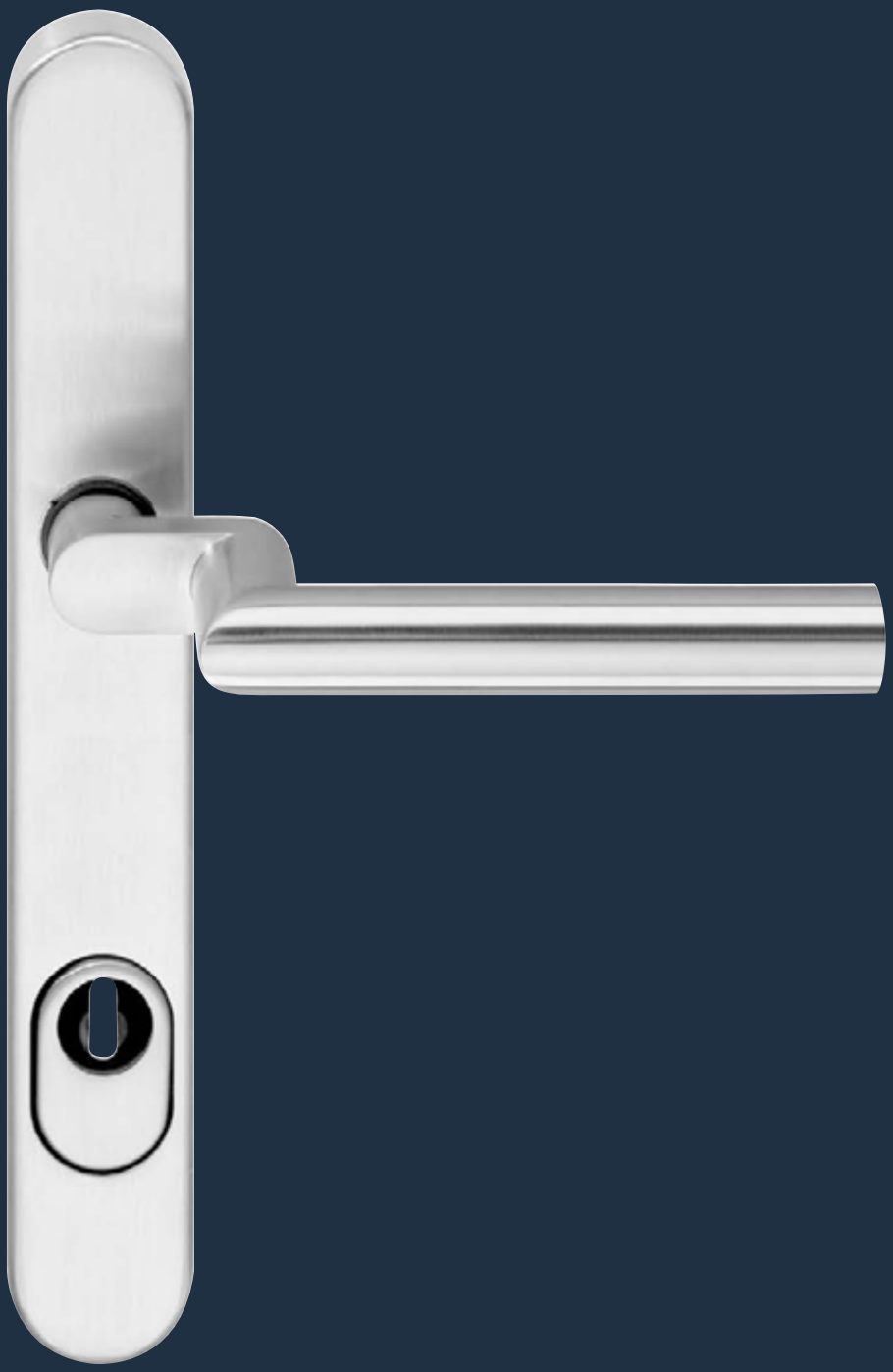

Swissdoor ApS • Stenhuggervej 2 • 5471 Søndersø • Danmark Telefon +45 86 28 00 00 • mail@swissdoor.dk • www.swissdoor.dk

ECO **SECURITY HANDLE SET FOR PROFILE FRAME DOORS ES 1 · D-315**

DIN 18 257 | EN 1906 | F

ECO

Product characteristics

Tested acc. to	EN 1906
With 9 mm spindle tested Fire-protection tested	F
Tested acc. to	DIN 18 257
Fixable bearing	■
Steel base in inner and outer plate	■
Concealed continous triple screw connection.	■
Inside with lever	■
DIN left / right	■

■ Yes - No ◘ Option

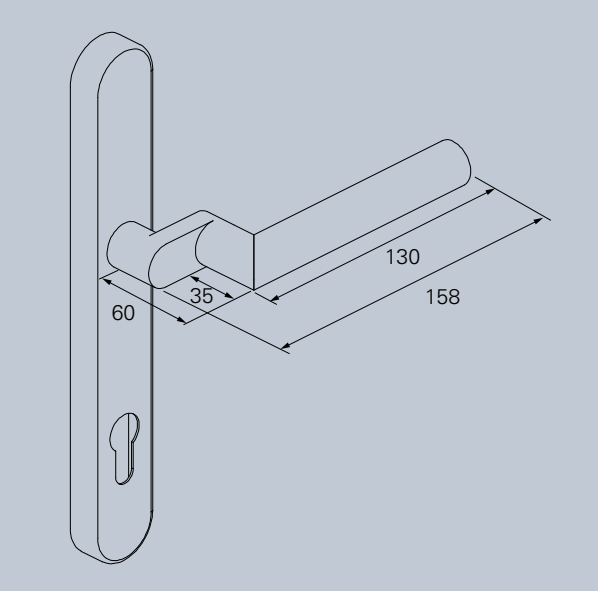

OGL

DIN Geprüft

Material:

ER Stainless steel

Al Aluminium

3

PRODUCT FAMILY D-300

Standard handle

D-310 . Page 226

D-330 . Page 236

Handle on plate

D-330 . Page 239, 242

D-330 . Page 241

Oval rose handle

D-310 . Page 272

D-315 . Page 276

D-335 . Page 280

Security handle

D-310 . Page 312

D-315 . Page 324

Window handle

F-310 . Page 328

D-315 Security handle set for profile frame doors OGL

D-315 Security handle set for profile frame doors with OGL – friction bearing technology

Fixed in maintenance-free bearing.Anti-burglary protection class ES 1 / class 2. Available with knob K-160.

User category: class 4

Outside: mounting height 15 mm

Distance 72 mm also available as FS version with 9 mm spindle

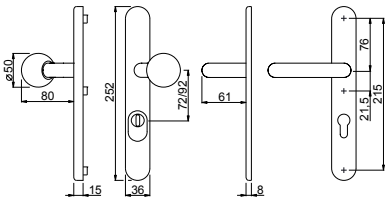

WSG K-160
FS-WSG ZA F

PZ

OGL – SECURITY HANDLE SET FOR PROFILE FRAME DOORS

ER

EN 1906 F

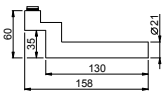

OGL

	∅	Distance	⧄	Kit sets PZ		Kit sets ZA	
S	21 mm	72 mm	8 mm	852311.46	852341.46	852312.46	852342.46
F	21 mm	92 mm	9 mm	854511.46	854541.46	854512.46	854542.46
⌂	21 mm	92 mm	10 mm	856511.46	856541.46	856512.46	856542.46

Finish: Stainless steel matt, further colours on request

AI

EN 1906 F

OGL

	∅	Distance	⧄	Kit sets PZ		Kit sets ZA	
S	22 mm	72 mm	8 mm	882311.30	882341.30	882312.30	882342.30
F	22 mm	92 mm	9 mm	884511.30	884541.30	884512.30	884542.30
⌂	22 mm	92 mm	10 mm	886811.30	886541.30	886512.30	886542.30

Finish: Aluminium anodised, further colours on request.

For door thickness 38 – 45 mm. Fire-proof lever sets for door thickness 40 – 65 mm. Please advise door thickness when ordering.

Swissdoor ApS • Stenhuggervej 2 • 5471 Søndersø • Danmark Telefon +45 86 28 00 00 • mail@swissdoor.dk • www.swissdoor.dk

SWiSSDOOR
DØRTEKNIK FOR PROFESSIONELLE

Europaparlament, Brüssel,
Belgium

ECO handle technology
Comings and goings

The encounter with the handle is aesthetic and ergonomic at the same time. The first thing is "what the handle feels like" and this refers not only to its shape but also to its mechanical qualities when pressed. The high-quality bearings in the handle not only allow it to function for a long time, they also convey a feeling of quality. ECO Schulte underscores this by granting a five-year warranty on its handle range.

Swissdoor ApS • Stenhuggervej 2 • 5471 Søndersø • Danmark Telefon +45 86 28 00 00 • mail@swissdoor.dk • www.swissdoor.dk

Window handles

F-110

Nylon base rose with 10 mm or 12 mm positioning studs.
Handle diametre: 21 mm. 7 mm spindle, 30 mm projection. 90° catch point.
Further spindle lengths on request

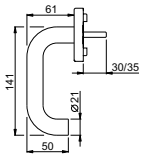

F-110.ER. U-Form	Colour	Studs	Spindle	Art.-No.
F-110.ER.12/30	Satin stainless steel	12 mm	7 x 30 mm	270807.46
F-110.ER.12/35	Satin stainless steel	12 mm	7 x 35 mm	270808.46
F-110.ER.10/30	Satin stainless steel	10 mm	7 x 30 mm	270805.46
F-110.ER.10/35	Satin stainless steel	10 mm	7 x 35 mm	270806.46

F-120

Nylon base rose with 10 mm or 12 mm positioning studs.
Handle diametre: 21 mm. 7 mm spindle, 30 mm projection. 90° catch point.
Further spindle lengths on request

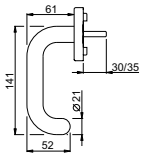

F-120.ER.UR-Form	Colour	Studs	Spindle	Art.-No.
F-120.ER.12/30	Satin stainless steel	12 mm	7 x 30 mm	270817.46
F-120.ER.12/35	Satin stainless steel	12 mm	7 x 35 mm	270819.46
F-120.ER.10/30	Satin stainless steel	10 mm	7 x 30 mm	270815.46
F-120.ER.10/35	Satin stainless steel	10 mm	7 x 35 mm	270816.46

F-210

Nylon base rose with 10 mm or 12 mm positioning studs.
Handle diametre: 21 mm. 7 mm spindle, 30 mm projection. 90° catch point.
Further spindle lengths on request

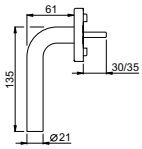

F-210.ER. L-Form	Colour	Studs	Spindle	Art.-No.
F-210.ER.12/30	Satin stainless steel	12 mm	7 x 30 mm	270837.46
F-210.ER.12/35	Satin stainless steel	12 mm	7 x 35 mm	270838.46
F-210.ER.10/30	Satin stainless steel	10 mm	7 x 30 mm	270835.46
F-210.ER.10/35	Satin stainless steel	10 mm	7 x 35 mm	270836.46

F-310

Nylon base rose with 10 mm or 12 mm positioning studs.
Handle diametre: 21 mm. 7 mm spindle, 30 mm projection. 90° catch point.
Further spindle lengths on request

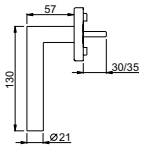

F-310.ER.CL-Form	Colour	Studs	Spindle	Art.-No.
F-310.ER.12/30	Satin stainless steel	12 mm	7 x 30 mm	270837.46
F-310.ER.12/35	Satin stainless steel	12 mm	7 x 35 mm	270838.46
F-310.ER.10/30	Satin stainless steel	10 mm	7 x 30 mm	270865.46
F-310.ER.10/35	Satin stainless steel	10 mm	7 x 35 mm	270866.46

F-410

Nylon base rose with 10 mm or 12 mm positioning studs.
Handle diametre: 21 mm. 7 mm spindle, 30 mm projection. 90° catch point.
Further spindle lengths on request

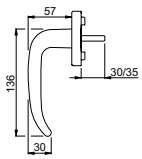

F-410.ER. U-Form	Colour	Studs	Spindle	Art.-No.
F-410.ER.12/30	Satin stainless steel	12 mm	7 x 30 mm	270701.46
F-410.ER.12/35	Satin stainless steel	12 mm	7 x 35 mm	270703.46
F-410.ER.10/30	Satin stainless steel	10 mm	7 x 30 mm	270700.46
F-410.ER.10/35	Satin stainless steel	10 mm	7 x 35 mm	270704.46

Swissdoor ApS • Stenhuggervej 2 • 5471 Søndersø • Danmark Telefon +45 86 28 00 00 • mail@swissdoor.dk • www.swissdoor.dk

SWiSSDOOR
DØRTEKNIK FOR PROFESSIONELLE

Accessories

Knobs

K-130

Knob K-130. Completely rivetted to base rosette. Complete with cover rosette and pre-mounted sleeve nuts (M5 x 30 mm).
M8 thread for a spindle for a knob / lever set.

Please order the fixing material separately.

OGL Ø 50 EN 1906 EN 179 F

ER	691570.46	691500.46	691440.46		
AI	691570.30	691500.30	691440.30	691501.30	691441.30

K-165

Knob K-165. Completely rivetted to base rosette. Complete with cover rosette and pre-mounted sleeve nuts (M5 x 30 mm).
M12 thread for a spindle for a knob / lever set.

Please order the fixing material separately.

OGL Ø 50 EN 1906 EN 179 F

ER	691571.46	692200.46	692300.46

K-135

OKL-FS knob K-135. Completely rivetted to base rosette (ER), complete with cover rosette (stainless steel matt) and pre-mounted sleeve nuts (M5 x 30 mm).
M12 thread for a spindle for a knob/lever set.

Please order the fixing material separately.

OGL OKL Ø 55 EN 1906 EN 179 F

ER	693000.46	693500.46	693550.46

K-135

OKL-FS knob K-135. Completely rivetted to base rosette (ER), complete with cover rosette (stainless steel matt) and pre-mounted sleeve nuts (M5 x 30 mm). **M8 thread for a spindle for a knob/lever set.**

Please order the fixing material separately.

OGL OKL Ø 55 EN 1906 EN 179 F

ER	694000.46	694500.46	694550.46

Swissdoor ApS • Stenhuggervej 2 • 5471 Søndersø • Danmark Telefon +45 86 28 00 00 • mail@swissdoor.dk • www.swissdoor.dk

Security plates / -roses

Short plate

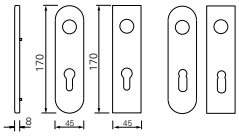

EN 1906 EN 179 F

ER	326198.46	326196.46		
Al	327198.30	327197.30	327180.30	327181.30
Ku	333727.02	333720.02	325180.02	325194.02

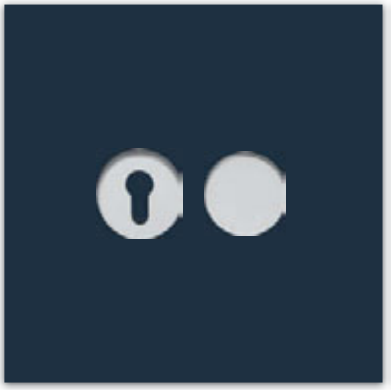

Roses

OGL

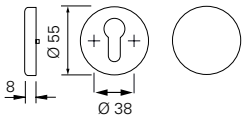

EN 1906 EN 179 F

ER	366070.46	366075.46	176605.46	176606.46
Al	367071.30	367075.30	177605.30	177606.30
Ku	354810	354811	361100	361135

Set of security roses with PZ hole

Material: Stainless steel matt
Consists of:

- Security rose with positioning studs (PZ)
- Steel base rose with cover rose (PZ)
- Fixing material

ER

Execution	11 mm	14 mm
Article number	214500.46	214510.46

Set of security roses with pull-off protection (ZA)

Material: Stainless steel matt
Consists of:

- Security rose with positioning stud (ZA), steel base rose with cover rose (PZ)
- Fixing material
- Pull-off protection (ZA)

ER

Execution	14 mm
Article number	214515.46

Security roses

Set of security roses with PZ hole

Material: Aluminium F1
Consists of:

- Security rose with positioning studs (PZ), steel base rose with cover rose (PZ)
- Fixing material

AI

Execution	11 mm	14 mm
Article number	214500.30	214510.30

Set of security roses with pull-off protection (ZA)

Material: Aluminium F1
Consists of:

- Security rose with positioning stud (ZA), steel base rose with cover rose (PZ)
- Fixing material
- Pull-off protection (ZA)

AI

Execution	14 mm
Article number	214515.30

Security rose with pull-off protection (ZA)

Square Form, two-parted
Material: Aluminium F1
Concealed screw fastening with stainless steel base

ER

Execution	16 mm
Article number	214595.46

Security rose with pull-off protection (ZA)

Square Form, two-parted
Material: Aluminium F1
Concealed screw fastening with stainless steel base

AI

Execution	16 mm
Article number	214595.30

Swissdoor ApS • Stenhuggervej 2 • 5471 Søndersø • Danmark Telefon +45 86 28 00 00 • mail@swissdoor.dk • www.swissdoor.dk

Door stop

Door stop BS 44

Material: Stainless steel 1.4301

Finish: Satinized
including fixing material

Execution	Door stop BS 44
Article number	257001.46

Door stop BS 45

Material: Stainless steel 1.4301

Finish: Satinized
including fixing material

Execution	Door stop BS 45
Article number	257002.46

Door stop BS 65

Material: Stainless steel 1.4301.

Finish: Satinized
including fixing material

Execution	Door stop BS 65	Base plate for BS 65 13 mm high (black lacquered)"
Article number	257009.46	25701214

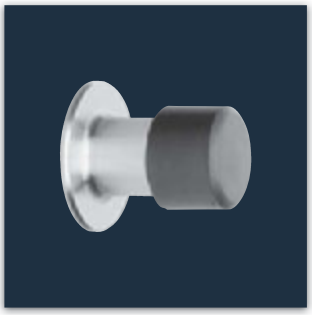

Door stop for walls WS 46

Material: Stainless steel 1.4301

Finish: Satinized
including fixing material

Execution	Door stop for walls WS 46
Article number	257008.46

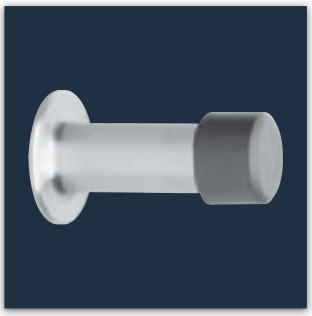

Door stop for walls WS 76

Material: Stainless steel 1.4301.

Finish: Satinized
including fixing material

Execution	Door stop for walls WS 76
Article number	257007.46

Push-pull handles

Push-pull handle straight

Handle diametre 32 mm. Distance between centres 300 mm. Simple and fast mounting.
Single-sided or double-sided fastening possible.
Note: Further centre distances on request.
The accessory for the single-sided fastening has to be ordered separately.

Execution	Single-sided without fixing material	Double-sided incl. fixing material
Article number	255611.46	255621.46

Push-pull handle cranked

Handle diametre 32 mm. Distance between centres 300 mm. Simple and fast mounting.
Single-sided or double-sided fastening possible.
Note: Further centre distances on request.
The accessory for the single-sided fastening has to be ordered separately.

Execution	Single-sided without fixing material	Double-sided incl. fixing material
Article number	255614.46	255624.46

Push-pull handle triangular

Handle diametre 32 mm. Distance between centres 300 mm. Simple and fast mounting.
Single-sided or double-sided fastening possible.
Note: Further centre distances on request.
The accessory for the single-sided fastening has to be ordered separately.

Execution	Single-sided without fixing material	Double-sided incl. fixing material
Article number	255613.46	255623.46

Push-pull handle semi-circular

Handle diametre 32 mm. Distance between centres 210 mm. Simple and fast mounting.
Single-sided or double-sided fastening possible.
Note: Further centre distances on request.
The accessory for the single-sided fastening has to be ordered separately.

Execution	Single-sided without fixing material	Double-sided incl. fixing material
Article number	255612.46	255622.46

Swissdoor ApS • Stenhuggervej 2 • 5471 Søndersø • Danmark Telefon +45 86 28 00 00 • mail@swissdoor.dk • www.swissdoor.dk

Fixing solutions for push-pull handles

Fixing solution 1

Fixing solution 1 for push-pull handles

Single-sided fixing with rose for door thickness 50 – 80 mm.

Fixing solution 2 for push-pull handles

Double-sided fixing with rose for screw-on fastening for door thickness
10 - 40 mm / 40 - 80 mm.
Invisible screwing, accessory set without illustration.

Execution	Fixing solution 1 for push-pull handles	Fixing solution 2 for push-pull handles
Article number	255601	255600

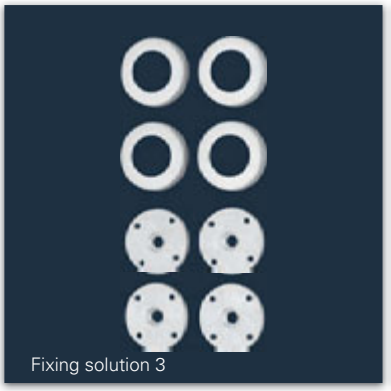
Fixing solution 3

Fixing solution 3 for push-pull handles

Double-sided fixing with rose for screw-on fastening.

Execution	Fixing solutions 3 for push-pull handles
Article number	255602

Fixing solution 4

Fixing solution 4 for push-pull handles

Single-sided fixing with rose.

Execution	Fixing solutions 4 for push-pull handles
Article number	255603

Fixing solution 5

Fixing solution 5 for push-pull handles

Single-sided fixing for hollow profiles.

Execution	Fixing solutions 5 for push-pull handles
Article number	255808

Spindle for standard handles

Spindle (8 mm)

For standard handles:
The fixing is carried out by a "set screw-headless with cup point" **(DIN 916)**.
When seizing, the screw pushes on / into the spindle.
Further lengths on request.

Article number	Spindle	Length
900607.43	∅ 8 mm	60 mm
900584.43	∅ 8 mm	90 mm
900591.43	∅ 8 mm	100 mm
900594.43	∅ 8 mm	120 mm
900601.43	∅ 8 mm	140 mm

Spindle (8,5 mm) Ö-Norm

For standard handles:
The fixing is carried out by a "set screw-headless with cup point" **(DIN 916)**.
When seizing, the screw pushes on / into the spindle.
Further lengths on request.

Article number	Spindle	Length
900744.43	∅ 8,5 mm	110 mm
900745.43	∅ 8,5 mm	125 mm
900746.43	∅ 8,5 mm	137 mm

Spindle (9 mm)

F

For standard handles, fire-proof:
The fixing is carried out by a "set screw-headless with cup point" **(DIN 916)**.
When seizing, the screw pushes on / into the spindle.
Further lengths on request.

Article number	Spindle	Length
900511.43	∅ 9 mm	60 mm
900571.43	∅ 9 mm	70 mm
900577.43	∅ 9 mm	100 mm
900581.43	∅ 9 mm	125 mm
900551.43	∅ 9 mm	140 mm

Spindle (10 mm)

For standard handles:
The fixing is carried out by a "set screw-headless with cup point" **(DIN 916)**.
When seizing, the screw pushes on / into the spindle.
Further lengths on request.

Article number	Spindle	Length
901040.43	∅ 10 mm	113 mm
901041.43	∅ 10 mm	120 mm
901042.43	∅ 10 mm	125 mm
901043.43	∅ 10 mm	130 mm
901044.43	∅ 10 mm	145 mm

Swissdoor ApS • Stenhuggervej 2 • 5471 Søndersø • Danmark Telefon +45 86 28 00 00 • mail@swissdoor.dk • www.swissdoor.dk

Spindle with offset drilling

Spindle with offset drilling (8 mm)

For a high-strength connection (spindle / lever) for door handles.
The fixing is carried out by a "set screw-headless with punch".
The punch breaks through the spindle at the point with the least thickness. Positioning necessary!
Further lengths on request.

Article number	Spindle	Length
900781.43	∅ 8 mm	75 mm
900823.43	∅ 8 mm	80 mm
900824.43	∅ 8 mm	85 mm
900825.43	∅ 8 mm	90 mm
900777.43	∅ 8 mm	95 mm
900759.43	∅ 8 mm	100 mm
900756.43	∅ 8 mm	105 mm
900757.43	∅ 8 mm	110 mm
900758.43	∅ 8 mm	115 mm
900779.43	∅ 8 mm	120 mm
900826.43	∅ 8 mm	125 mm
900799.43	∅ 8 mm	130 mm

Spindle with offset drilling (9 mm)

For a high-strength connection (spindle / lever) for door handles.
The fixing is carried out by a "set screw-headless with punch".
The punch breaks through the spindle at the point with the least thickness. Positioning necessary!
Further lengths on request.

F

Article number	Spindle	Length
900451.43	∅ 9 mm	60 mm
900452.43	∅ 9 mm	70 mm
900453.43	∅ 9 mm	85 mm
900422.43	∅ 9 mm	99 mm
900423.43	∅ 9 mm	104 mm
900424.43	∅ 9 mm	109 mm
900425.43	∅ 9 mm	114 mm
900788.43	∅ 9 mm	120 mm
900427.43	∅ 9 mm	124 mm
900778.43	∅ 9 mm	130 mm
900432.43	∅ 9 mm	144 mm
900434.43	∅ 9 mm	154 mm

Spindles ■ Spreaded spindle

Spreaded spindle (8 mm)

The fixing is carried out by a "set screw-headless with cone point" **(DIN 914)**.
The cone point enters the slot of the spreaded spindle.
The spindle is pushed apart. Positioning necessary!
Further lengths on request.

Article number	Spindle	Length
901006.43	∅ 8 mm	88 mm
900558.43	∅ 8 mm	100 mm
901003.43	∅ 8 mm	110 mm
900610.43	∅ 8 mm	120 mm
908010.43	∅ 8 mm	143 mm

Spreaded spindle (9 mm)

F

The fixing is carried out by a "set screw-headless with cone point" **(DIN 914)**.
The cone point enters the slot of the spreaded spindle.
The spindle is pushed apart. Positioning necessary!
Further lengths on request.

Article number	Spindle	Length
904006.43	∅ 9 mm	90 mm
908017.43	∅ 9 mm	100 mm
900259.43	∅ 9 mm	110 mm
900394.43	∅ 9 mm	120 mm
900565.43	∅ 9 mm	130 mm

Spreaded spindle (10 mm)

The fixing is carried out by a "set screw-headless with cone point" **(DIN 914)**.
The cone point enters the slot of the spreaded spindle.
The spindle is pushed apart. Positioning necessary!
Further lengths on request.

Article number	Spindle	Length
908012.43	∅ 10 mm	100 mm
908003.43	∅ 10 mm	110 mm
908061.43	∅ 10 mm	120 mm
908014.43	∅ 10 mm	130 mm
500186.43	∅ 10 mm	145 mm

Swissdoor ApS • Stenhuggervej 2 • 5471 Søndersø • Danmark Telefon +45 86 28 00 00 • mail@swissdoor.dk • www.swissdoor.dk

Spindles ■ Panic pin

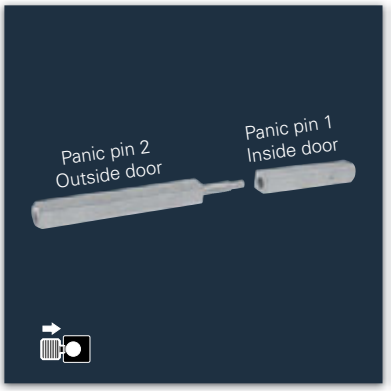

Panic pin set (9 mm)

F

For panic door hardware using locks with divided hub:
in order to guarantee the panic function, the panic pin has to be mounted with the screw sleeve inwards.
Further information can be found on page 512.
Further lengths on request.

Article number	Spindle	Length (L1)	Length (L2)
901120.43	∅ 9 mm	40 mm	50 mm
901121.43	∅ 9 mm	40 mm	55 mm
901122.43	∅ 9 mm	40 mm	60 mm
901123.43	∅ 9 mm	40 mm	65 mm
901124.43	∅ 9 mm	40 mm	70 mm
901125.43	∅ 9 mm	40 mm	75 mm
901126.43	∅ 9 mm	40 mm	80 mm
901127.43	∅ 9 mm	40 mm	85 mm
901128.43	∅ 9 mm	45 mm	50 mm
901129.43	∅ 9 mm	45 mm	55 mm
901130.43	∅ 9 mm	45 mm	60 mm
901131.43	∅ 9 mm	45 mm	65 mm
901132.43	∅ 9 mm	45 mm	70 mm
901133.43	∅ 9 mm	45 mm	75 mm
901134.43	∅ 9 mm	45 mm	80 mm
901135.43	∅ 9 mm	45 mm	85 mm
901136.43	∅ 9 mm	50 mm	50 mm
901137.43	∅ 9 mm	50 mm	55 mm
901138.43	∅ 9 mm	50 mm	60 mm
901139.43	∅ 9 mm	50 mm	65 mm
901140.43	∅ 9 mm	50 mm	70 mm
901141.43	∅ 9 mm	50 mm	75 mm
901142.43	∅ 9 mm	50 mm	80 mm
901143.43	∅ 9 mm	50 mm	85 mm
901144.43	∅ 9 mm	55 mm	55 mm
901145.43	∅ 9 mm	55 mm	60 mm
901146.43	∅ 9 mm	55 mm	65 mm
901147.43	∅ 9 mm	55 mm	70 mm
901148.43	∅ 9 mm	55 mm	75 mm
901149.43	∅ 9 mm	55 mm	80 mm
901150.43	∅ 9 mm	55 mm	85 mm
901151.43	∅ 9 mm	60 mm	60 mm
901152.43	∅ 9 mm	60 mm	65 mm
901153.43	∅ 9 mm	60 mm	70 mm
901154.43	∅ 9 mm	60 mm	75 mm
901155.43	∅ 9 mm	60 mm	80 mm
901156.43	∅ 9 mm	60 mm	85 mm
901157.43	∅ 9 mm	65 mm	65 mm
901158.43	∅ 9 mm	65 mm	70 mm
901159.43	∅ 9 mm	65 mm	75 mm
901160.43	∅ 9 mm	65 mm	80 mm
901161.43	∅ 9 mm	65 mm	85 mm

Spindles ■ Spindles for knob / lever sets

Spindles for knob / lever sets (8 mm)

The spindle is screwed into the grip plate / knob (minimum 8 mm).
Do not tighten too strong since the function of the handle has to be given.
Further lengths on request.

Article number	Spindle	Length
900557.43	∅ 8 mm	65 mm
900680.43	∅ 8 mm	90 mm
900681.43	∅ 8 mm	105 mm
900683.43	∅ 8 mm	120 mm
900684.43	∅ 8 mm	130 mm

Spindles for knob / lever sets (9 mm)

F

The spindle is screwed into the grip plate / knob (minimum 8 mm).
Do not tighten too strong since the function of the handle has to be given.
Further lengths on request.

Article number	Spindle	Length
900686.43	∅ 9 mm	80 mm
900688.43	∅ 9 mm	90 mm
900689.43	∅ 9 mm	101 mm
900691.43	∅ 9 mm	110 mm
900693.43	∅ 9 mm	125 mm

Spindles for knob / lever sets (10 mm)

The spindle is screwed into the grip plate / knob (minimum 8 mm).
Do not tighten too strong since the function of the handle has to be given.
Further lengths on request.

Article number	Spindle	Length
901048.43	∅ 10 mm	110 mm
901047.43	∅ 10 mm	120 mm

Swissdoor ApS • Stenhuggervej 2 • 5471 Søndersø • Danmark Telefon +45 86 28 00 00 • mail@swissdoor.dk • www.swissdoor.dk

Spindles ■ Spindles for knob / lever sets

Spindle for knob / lever sets with offset drilling (8 mm)

For knob / lever sets with knobs with M12 thread.
The spindle is screwed into the grip plate / knob and
is tightened with a wrench SW14
Further lengths on request.

Article number	Spindle	Length
908076.43	∅ 8 mm	70 mm
908078.43	∅ 8 mm	83 mm
908080.43	∅ 8 mm	90 mm
908082.43	∅ 8 mm	100 mm
908084.43	∅ 8 mm	125 mm

Spindle for knob / lever sets with offset drilling (9 mm)

F

For knob / lever sets with knobs with M12 thread.
The spindle is screwed into the grip plate / knob and
is tightened with a wrench SW14
Further lengths on request.

Article number	Spindle	Length
908068.43	∅ 9 mm	60 mm
908069.43	∅ 9 mm	70 mm
908067.43	∅ 9 mm	80 mm
908090.43	∅ 9 mm	100 mm
908091.43	∅ 9 mm	120 mm

Spindle for knob / lever sets with offset drilling (10 mm)

For knob / lever sets with knobs with M12 thread.
The spindle is screwed into the grip plate / knob and
is tightened with a wrench SW14
Further lengths on request.

Article number	Spindle	Length
901050.43	∅ 10 mm	67 mm
901052.43	∅ 10 mm	87 mm
901054.43	∅ 10 mm	100 mm
901056.43	∅ 10 mm	115 mm
901057.43	∅ 10 mm	127 mm

Accessories

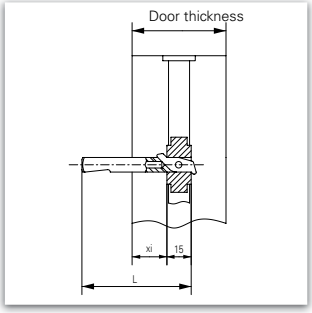

Spindle with clamp

- Made of steel, zinc-plated
- For single-sided drilled doors

Article number	Spindle	Length
1090038243 *	∅ 9 mm	L = 57 mm
109003794300030	∅ 8 mm	L = 60 mm
1090038343 *	∅ 9 mm	L = 65 mm
1090038143 *	∅ 9 mm	L = 75 mm
109003784300030	∅ 8/10 mm	L = 60 mm

* With offset drilling

Set of back plate with PZ-hole

Incl. base rose. Material: Stainless steel 1.4301
Finish matt or aluminium F1

Article number	Execution
176615.46	OKL-Set of rose back plates stainless steel 11 mm
176605.46	OGL-Set of rose back plates stainless steel 8 mm
177605.30	OGL-Set of rose back plates aluminium 8 mm
176530.46	SGL-Set of rose back plates stainless steel 8 mm
177530.30	SGL-Set of rose back plates aluminium 8 mm

ER AI

Set of back plate with BB-hole

Incl. base rose. Material: Stainless steel 1.4301
Finish matt or aluminium F1

Article number	Execution
176617.46	OKL-Set of rose back plates stainless steel 11 mm
176600.46	OGL-Set of rose back plates stainless steel 8 mm
177600.30	OGL-Set of rose back plates aluminium 8 mm
176531.46	SGL-Set of rose back plates stainless steel 8 mm
177351.30	SGL-Set of rose back plates aluminium 8 mm

ER AI

Set of back plate UG (blind)

Material: Stainless steel 1.4301
Finish matt or aluminium F1

Article number	Execution
176616.46	OKL-Set of rose back plates stainless steel 11 mm
176606.46	OGL-Set of rose back plates stainless steel 8 mm
177606.30	OGL-Set of rose back plates aluminium 8 mm
176533.46	SGL-Set of rose back plates stainless steel 8 mm
177533.30	SGL-Set of rose back plates aluminium 8 mm

ER AI

WC-set

Incl. base rose. Available with external spindle (AV) or external release slot (SK).
Material: Stainless steel 1.4301 - Finish matt or aluminium F1

Execution	Article number **AV**	Article number **SK**
OKL-Set of rose back plates stainless steel 11 mm	–	176627.46
OGL/SGL-Set of rose back plates stainless steel 8 mm	176620.46	176621,46
OGL/SGL-Set of rose back plates aluminium 8 mm	177622.30	177624.30

Swissdoor ApS • Stenhuggervej 2 • 5471 Søndersø • Danmark Telefon +45 86 28 00 00 • mail@swissdoor.dk • www.swissdoor.dk

Accessories

Pop rivet nut for oval rose counter handles

Article number	Execution
1091050446	Filko-pop rivet nut, Material: 1.403,

Set of screws for levers on rose (VDS)

Set consists of screws and sleeve nuts for lever - lever
(4 screws & 4 sleeve nuts) or lever - knob (4 screws & 2 sleeve nuts)

Article number	Execution
10916050	D/D – Door thickness 38 mm - 45 mm
10916000	D/D – Door thickness 40 mm - 66 mm
10916051	WSG – Door thickness 38 mm - 45 mm
10916001	WSG – Door thickness 40 mm - 66 mm

Set of screws for levers on rose (ROS)

Set consists of screws and sleeve nuts for lever - lever
(4 screws & 4 sleeve nuts) or lever - knob (4 screws & 2 sleeve nuts)

Article number	Execution
10916058	D/D • Door thickness 38 mm - 45 mm
10916004	D/D • Door thickness 40 mm - 66 mm
10916055	WSG • Door thickness 38 mm - 45 mm
10916005	WSG • Door thickness 40 mm - 66 mm

Accessory set BB-insert

Set consists of BB-insert for PZ hole with key and mounting screw.

Article number	Execution
10913641	Accessory set nylon BB-insert, key 84 mm no. 1, screw
10913642	Accessory set nylon BB-insert, key 84 mm no. 2, screw
10913643	Accessory set nylon BB-insert, key 84 mm no. 3, screw
10913644	Accessory set nylon BB-insert, key 84 mm no. 4, screw
10913645	Accessory set nylon BB-insert, key 84 mm no. 5, screw
10913646	Accessory set nylon BB-insert, key 84 mm no. 6, screw
10913647	Accessory set nylon BB-insert, key 84 mm no. 7, screw
10913648	Accessory set nylon BB-insert, key 84 mm no. 8, screw
10913649	Accessory set nylon BB-insert, key 84 mm no. 9, screw
10913640	Accessory set nylon BB-insert, key 84 mm no. 10, screw

Sleeves

Sleeve nut

To be used for door handles (screwed through).
Steel zinc-plated, M5 inner thread with pressure-forged spindle 6,22 mm.

Article number	Execution
910251.43	10 mm
910252.43	15 mm
910254.43	20 mm
910275.43	24 mm
910120.43	30 mm
910130.43	40 mm

Adjustment sleeve 9 mm to 8 mm spindle

Use for reduction of spindles.
Steel zinc-plated, lengthwise split

Article number	Length
930351	15 mm
930363	30 mm

Adjustment sleeve 8,5 mm to 8 mm spindle

Use for reduction of spindles.
Steel zinc-plated, lengthwise split

Article number	Length
930355	28 mm

Adjustment sleeve 8 mm to 7 mm spindle

Use for reduction of spindles.
Steel zinc-plated, lengthwise split

Article number	Length
930364	15 mm

Adjustment sleeve with collar 9 mm to 8 mm spindle

Use for reduction of spindles.
Steel zinc-plated, lengthwise split

Article number	Length
930372	30 mm

Adjustment sleeve with collar 9 mm to 8,5 mm spindle

Use for reduction of spindles.
Steel zinc-plated, lengthwise split

Article number	Length
930362	18 mm

Adjustment sleeve with collar 8,5 mm to 8 mm spindle

Use for reduction of spindles.
Steel zinc-plated, lengthwise split

Article number	Length
930355	28 mm

Swissdoor ApS • Stenhuggervej 2 • 5471 Søndersø • Danmark Telefon +45 86 28 00 00 • mail@swissdoor.dk • www.swissdoor.dk

Drilling templates

Drilling template with centering pin for interior doors

Drilling template for nylon lever sets on rose or plate acc. to **DIN 1906 (DIN 18 225 and DIN 18273)** in following executions: BB, PZ, lever / knob or WC. With steel drill bushing for a drill diametre of 6,5 mm.

Article number	Execution
930317	Drilling template for nylon lever sets

Drilling template with centering pin for interior doors and fire-protection handle sets

Drilling template for stainless steel and aluminium handle sets with roses or plates acc. to **EN 1906 (DIN 18 255 and DIN 18273)** in following executions: BB, PZ, lever / knob or WC. With steel drill bushing for a drill diametre of 8,5 mm.

Article number	Execution
930318	Drilling template for stainless steel and aluminium handle sets

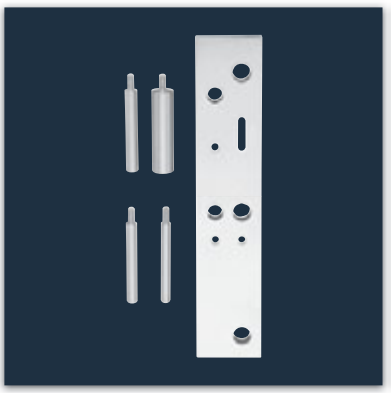

Drilling template with centering pin for security handle sets

Drilling template for security handle sets acc. to **EN 1906 / DIN 18257 / DIN 18 255** in following executions: PZ / RZ / ZA. With steel drill bushing for a drill diametre of 13 mm.

Article number	Execution
930200	Drilling template for security handle sets

SWISSDOOR
DØRTEKNIK FOR PROFESSIONELLE

ECO

Handles and accessories for sanitary partitions

Latching on to things

■ SYSTEM TECHNOLOGY FOR THE DOOR

Swissdoor ApS • Stenhuggervej 2 • 5471 Søndersø • Danmark Telefon +45 86 28 00 00 • mail@swissdoor.dk • www.swissdoor.dk

TABLE OF CONTENTS

Handle sets for bathroom doors and sanitary partitions

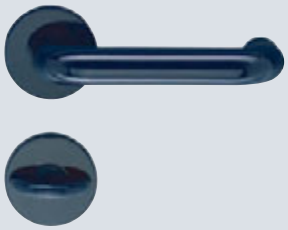

Nylon (Ku)
Page 350

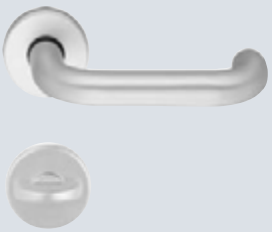

Aluminium (Al)
Page 352

Stainless steel (ER)
Page 356

Ku, Al, ER
Page 358

Locks for bathroom doors and sanitary partitions

Nylon (Ku)
Page 360

Ku, Al, ER
Page 361

Hasp-type lock
Page 362

Hinges for bathroom doors and sanitary partitions

Nylon hinge for unrebated doors
Page 364

Swissdoor ApS • Stenhuggervej 2 • 5471 Søndersø • Danmark Telefon +45 86 28 00 00 • mail@swissdoor.dk • www.swissdoor.dk

TABLE OF CONTENTS

Accessories for bathroom doors and sanitary partitions

Hook bumper / Hooks (Ku)
Page 370

Push-pull handles (Ku)
Page 372

Partition foot elements (Ku)
Page 374

Toilet roll holder (Ku)
Page 375

WC brush set
(Ku) / Glass
Page 376

Handle sets for bathroom doors and sanitary partitions ▪ Nylon

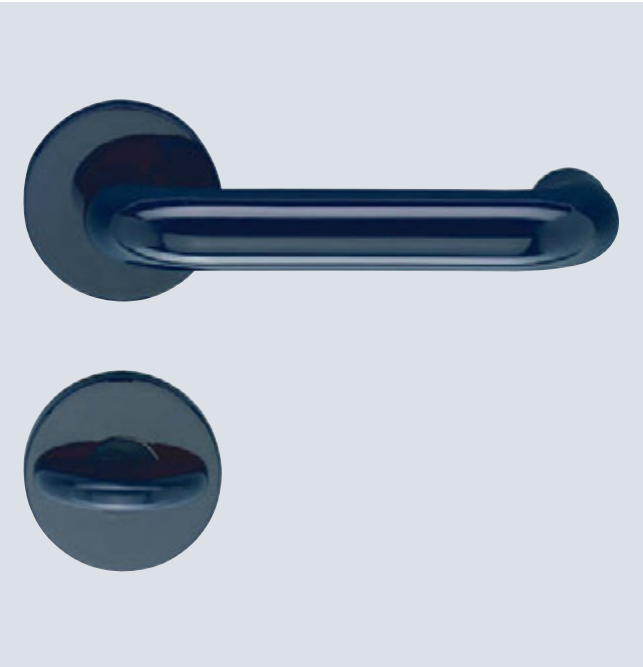

Description		
User category		■
Lever with steel core		■
Lever diameter	20 mm	■
Nylon base with positioning studs		■
Lever with fixable bearing		-
Spindle	7 mm	◘
	8 mm	■
	8,5 mm	◘
Concealed, continuous screw connection		■

■ Yes - No ◘ On Request

Description

- Available for all common partition wall thicknesses
- Complete with WC lock and red/white indicator
- Emergency opening via 8 mm external spindle
- External release slot on request
- Also available BB, PZ and lever/knob version
- Other colours on request
- Appropriate drill template available, (Art.-No. 930 317)
- WC version with 5 mm, 6 mm or 8 mm square spindle available on request
- Square spindle inset in handle

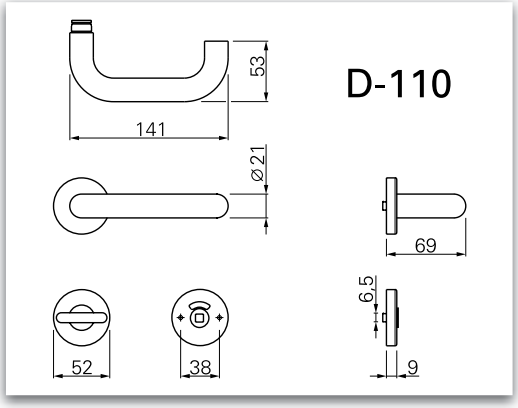

Dimensioning

White	Dark grey	Red	Dark blue	Blue	Black
RAL 9016*	RAL 7030 / 7038*	RAL 3003*	RAL 5011 / 5013*	RAL 5002*	RAL 9005*

Ku

BGL
Certified quality

D-110	Article number	Ø	◘		Material
D 110.Ku.DD.WC	150670	20 mm	8 mm		Nylon

Swissdoor ApS • Stenhuggervej 2 • 5471 Søndersø • Danmark Telefon +45 86 28 00 00 • mail@swissdoor.dk • www.swissdoor.dk

Handle sets for bathroom doors and sanitary partitions ▪ Nylon

Description		
User category	EN 1906	■
Lever with steel core		■
Lever diameter	23 mm	■
Steel base with positioning studs		■
Lever with fixable bearing		■
Spindle	7 mm	◘
	8 mm	■
	8,5 mm	◘
Concealed, continuous screw connection		■

■ Yes - No ◘ On Request

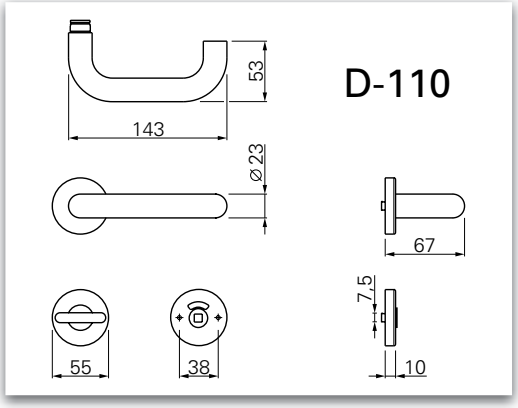

Dimensioning

Description

- Available for all common partition wall thicknesses
- Complete with WC lock and red/white indicator
- Emergency opening via 8 mm external spindle
- External release slot on request
- Also available BB, PZ and lever/knob version
- Other colours on request
- Appropriate drill template available, (Art.-No. 930 317)

White	Dark grey	Red	Dark blue	Blue	Black
RAL 9016*	RAL 7030 / 7038*	RAL 3003*	RAL 5011 / 5013*	RAL 5002*	RAL 9005*

OGL Certified quality

Ku

EN 1906

D-110	Article number	Ø	⌀		Material
D 110.Ku.DD.WC	154670	23 mm	8 mm		Nylon

Handle sets for bathroom doors and sanitary partitions ▪ Aluminium

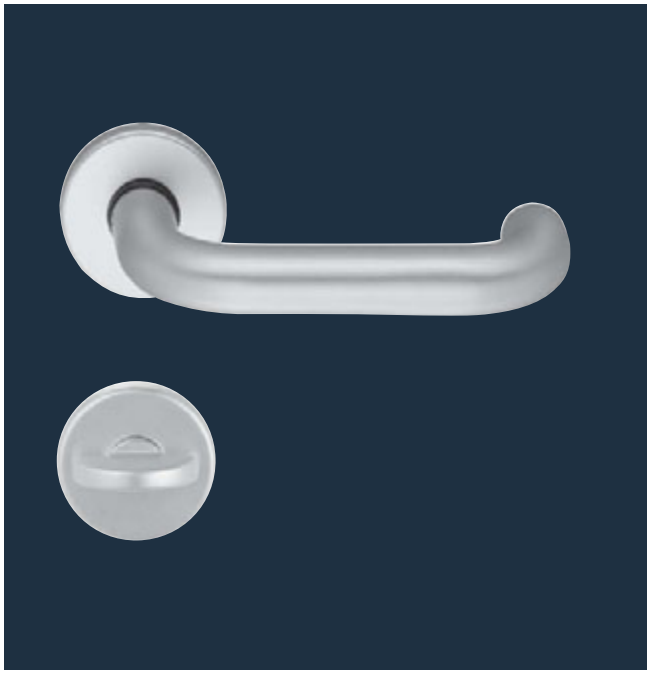

Description		
User category		-
Lever with steel core		■
Lever diameter	18 mm	■
	20 mm	◘
Nylon base		■
Lever with fixable bearing		-
Spindle	7 mm	◘
	8 mm	■
	8,5 mm	◘
Concealed, continuous screw connection		■

■ Yes - No ◘ On Request

Description

- Available for all common partition wall thicknesses
- Complete with WC lock and red/white indicator
- Emergency opening via external release slot
- Emergency opening via 8 mm external spindle on request
- Also available BB, PZ and lever/knob version
- Appropriate drill template available, (Art.-No. 930 317)
- Square spindle inset in handle

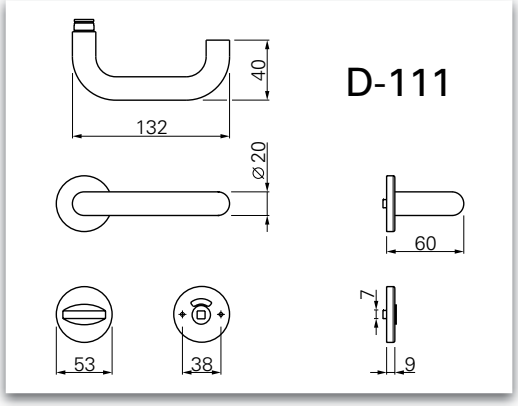

Dimensioning

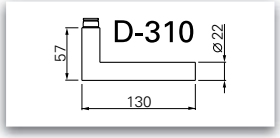

Al

BGL
Certified quality

D-111	Article number	Form	⌀	Material
D 111.Al.10.WC	159112.30	U-Form	8 mm	Aluminium

Al

BGL
Certified quality

D-310	Article number	Form	⌀	Material
D 310.Al.10.WC	157300.30	CL-Form	8 mm	Aluminium

Swissdoor ApS • Stenhuggervej 2 • 5471 Søndersø • Danmark Telefon +45 86 28 00 00 • mail@swissdoor.dk • www.swissdoor.dk

Handle sets for bathroom doors and sanitary partitions ▪ Aluminium

Description		
User category Class 3	EN 1906	■
Lever with steel core		■
Lever diameter	21 mm	■
Nylon base with positioning studs		■
Lever with fixable bearing		■
Spreaded spindle	7 mm	◘
	8 mm	■
	8,5 mm	◘
Concealed, continuous screw connection		■

■ Yes - No ◘ On Request

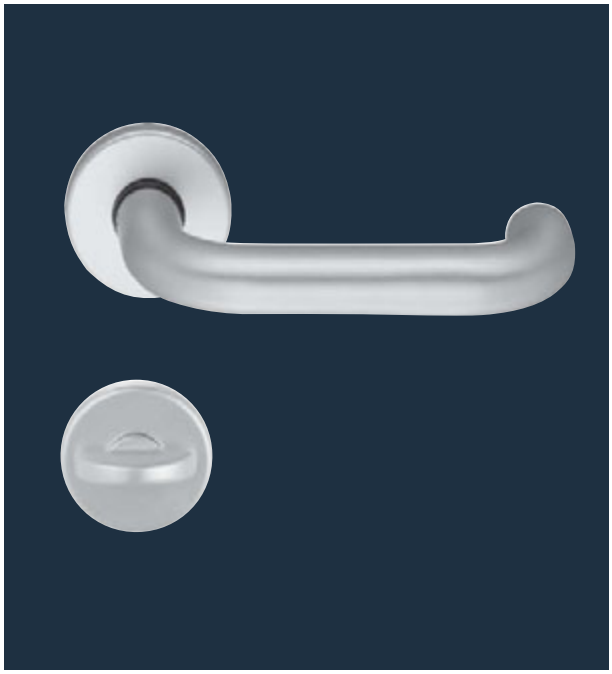

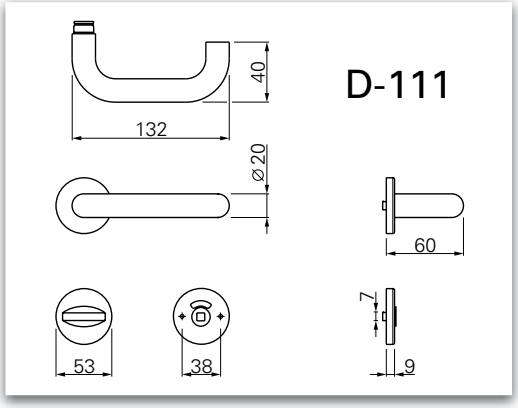

Dimensioning

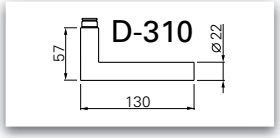

Description

- Available for all common partition wall thicknesses
- Complete with WC lock and red/white indicator
- Emergency opening via 8 mm external spindle
- External release slot on request
- Also available BB, PZ and lever/knob version
- Appropriate drill template available, (Art.-No. 930 317)
- Lever with fixable bearing

SGL Certified quality

Al

EN 1906

D-111	Article number	Form	⌀		Material
D 111.Al.12.WC	152520.30	U-Form	8 mm		Aluminium

SGL Certified quality

Al

EN 1906

D-310	Article number	Form	⌀		Material
D 310.Al.12.WC	152720.30	CL-Form	8 mm		Aluminium

Handle sets for bathroom doors and sanitary partitions ▪ Aluminium

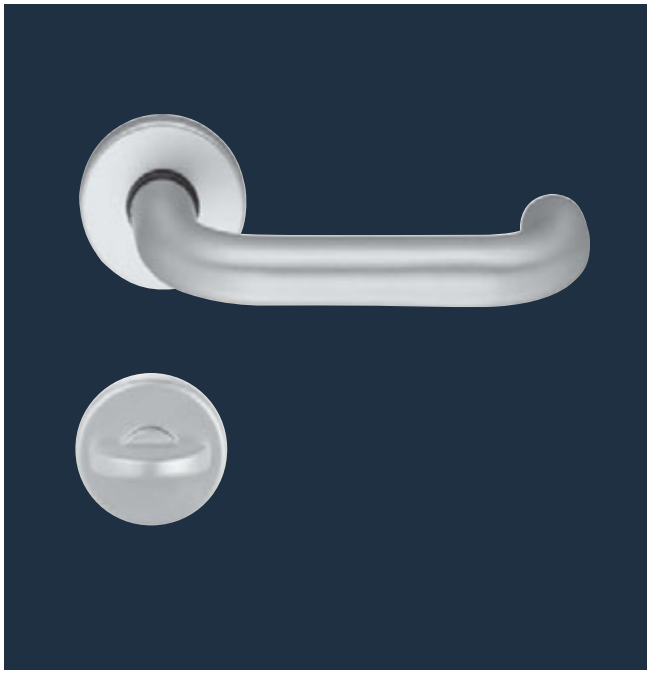

Description		
User category Class 4	EN 1906	■
Lever with steel core		■
Lever diameter	21 mm	■
Steel base with positioning studs		■
Lever with fixable bearing		-
Spindle	7 mm	◘
	8 mm	■
	8,5 mm	◘
Concealed, continuous screw connection		■

■ Yes - No ◘ On Request

Description

- Available for all common partition wall thicknesses
- Complete with WC lock and red/white indicator
- Emergency opening via 8 mm external spindle
- External release slot on request
- Also available BB, PZ and lever/knob version
- Appropriate drill template available, (Art.-No. 930 317)
- Lever with fixable bearing

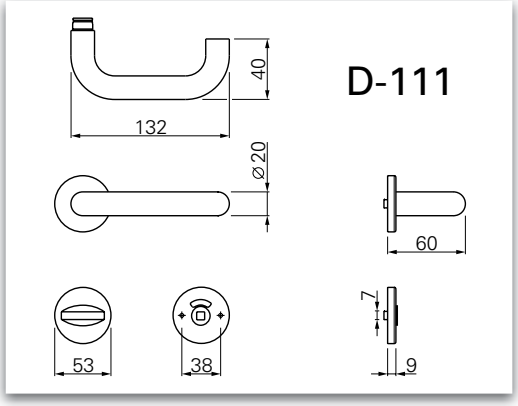

Dimensioning

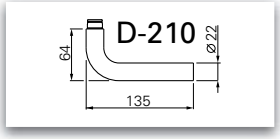

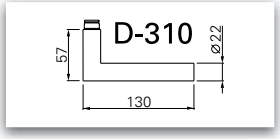

Swissdoor ApS • Stenhuggervej 2 • 5471 Søndersø • Danmark Telefon +45 86 28 00 00 • mail@swissdoor.dk • www.swissdoor.dk

Handle sets for bathroom doors and sanitary partitions ▪ Aluminium

OGL Certified quality · Al · EN 179 · EN 1906

D-111	Article number	Form	⌀		Material
D 111.Al.13.WC	157520.30	U-Form	8 mm		Aluminium

OGL Certified quality · Al · EN 1906

D-210	Article number	Form	⌀		Material
D-210.Al.13.WC	157620.30	L-Form	8 mm		Aluminium

OGL Certified quality · Al · EN 1906

D-310	Article number	Form	⌀		Material
D 310.Al.13.WC	157720.30	CL-Form	8 mm		Aluminium

Handle sets for bathroom doors and sanitary partitions ▪ Stainless steel

Description		
User category Class 3	EN 1906	■
Maintenance free lever guidance		■
Lever diameter	18 mm	-
	21 mm	■
Nylon base with positioning studs		■
Lever with fixable bearing		■
Spreaded spindle	7 mm	-
	8 mm	■
	8,5 mm	-
Concealed, continuous screw connection		■

■ Yes - No ◘ On Request

Description

- Available for all common partition wall thicknesses
- Complete with WC lock and red/white indicator
- Emergency opening via 8 mm external spindle
- External release slot on request
- Also available BB, PZ and lever/knob version
- Appropriate drill template available, (Art.-No. 930 317)
- Fixable bearing with restoring spring
- Surface: Stainless steel, satin finish

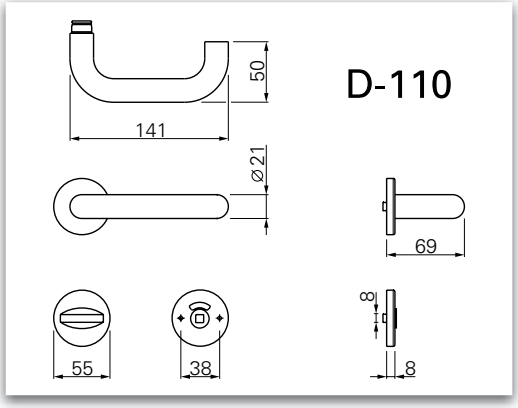

Dimensioning

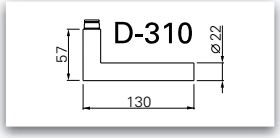

ER EDELSTAHL Rost frei SGL Certified quality EN 1906

D-110	Article number	Form	⌀		Material
D 110.ER.12.WC	152520.46	U-Form	8 mm		Stainless steel

ER EDELSTAHL Rost frei SGL Certified quality EN 1906

D-310	Article number	Form	⌀		Material
D 310.ER.12.WC	152720.46	CL-Form	8 mm		Stainless steel

Swissdoor ApS • Stenhuggervej 2 • 5471 Søndersø • Danmark Telefon +45 86 28 00 00 • mail@swissdoor.dk • www.swissdoor.dk

Handle sets for bathroom doors and sanitary partitions ▪ Stainless steel

Description		
User category Class 4	EN 1906	■
Maintenance free lever guidance		■
Lever diameter	18 mm	-
	21 mm	■
Steel base with positioning studs		■
Lever with fixable bearing		■
Spreaded spindle	7 mm	-
	8 mm	■
	8,5 mm	-
Concealed, continuous screw connection		■

■ Yes - No ◘ On Request

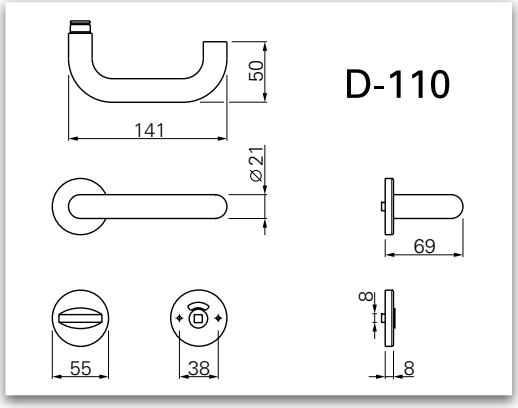

Dimensioning

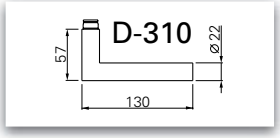

Description

- Available for all common partition wall thicknesses
- Complete with WC lock and red/white indicator
- Emergency opening via 8 mm external spindle
- External release slot on request
- Also available BB, PZ and lever/knob version
- Appropriate drill template available, (Art.-No. 930 317)
- Fixable bearing
- Surface: Stainless steel, satin finish

OGL Certified quality · Rost frei · ER · EN 1906

D-110	Article number	Form	⌀		Material
D 110.ER.13.WC	156520.46	U-Form	8 mm		Stainless steel

OGL Certified quality · Rost frei · ER · EN 1906

D-310	Article number	Form	⌀		Material
D 310.ER.13.WC	156720.46	CL-Form	8 mm		Stainless steel

Description

- 2 single-piece knobs or 2 twin-piece knobs complete with locking button and indicator
- Emergency opening via 8 mm external spindle
- External release slot on request (SK)
- Concealed fastening
- Available for all common partition wall thicknesses

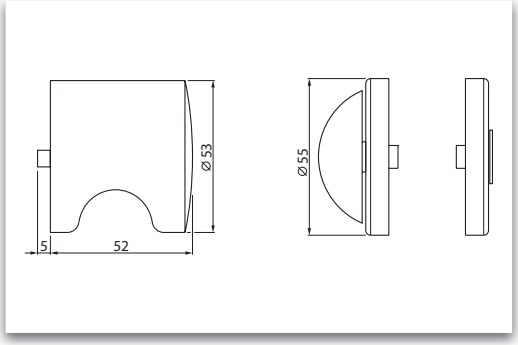

Dimensioning

ER

Article number	Material	Version
156030.46	Stainless steel	AV
156032.46	Stainless steel	SK

Al

Article number	Material	Version
157030.30	Aluminium	AV
157032.30	Aluminium	SK

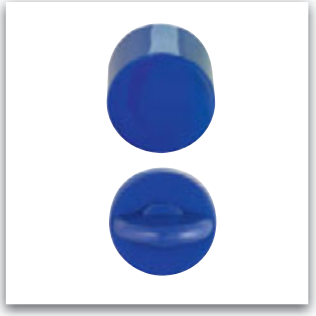

Ku

Article number	Material	Version
1580800	Nylon	AV
On Request	Nylon	SK

Swissdoor ApS • Stenhuggervej 2 • 5471 Søndersø • Danmark Telefon +45 86 28 00 00 • mail@swissdoor.dk • www.swissdoor.dk

SWISSDOOR
DØRTEKNIK FOR PROFESSIONELLE

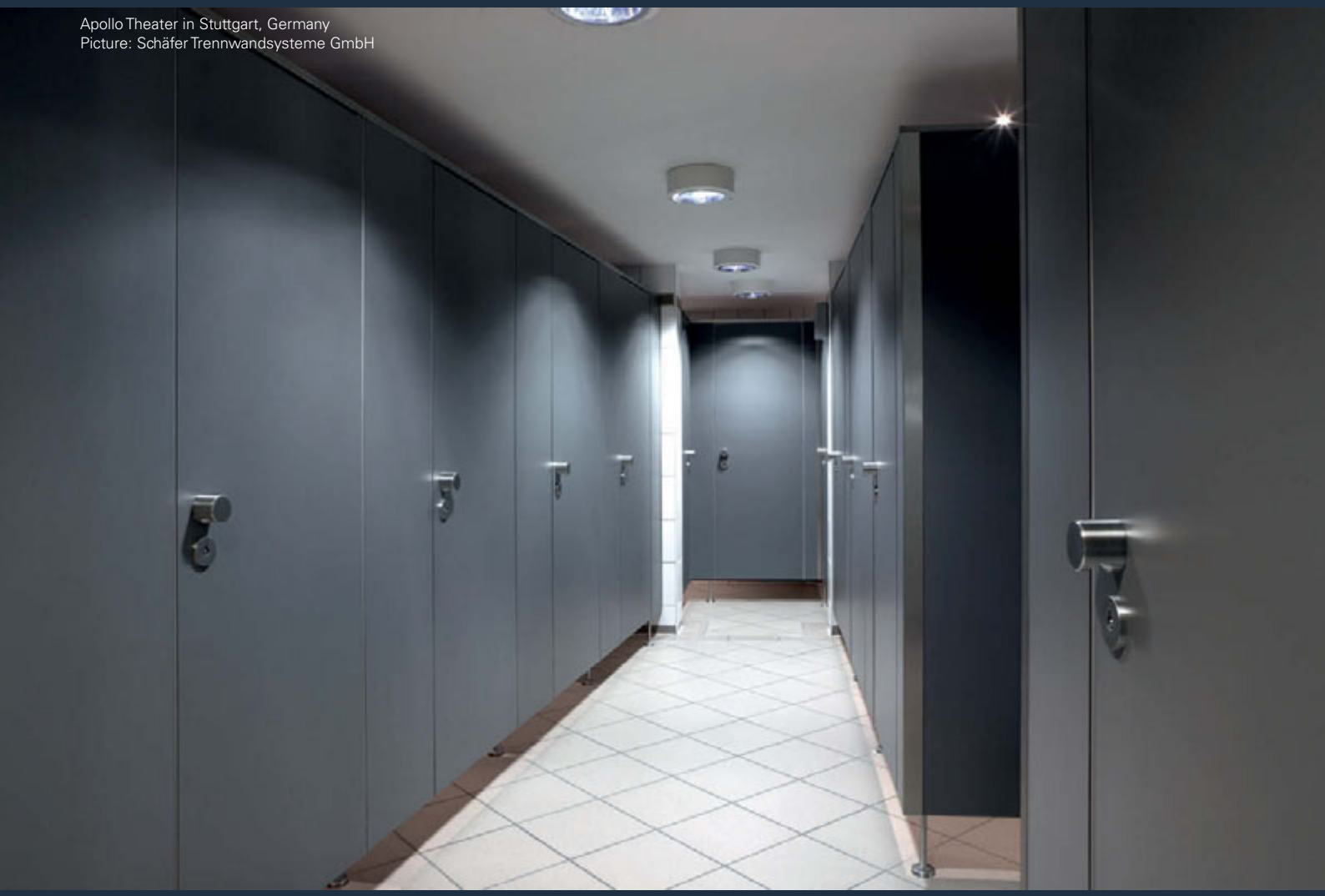

Apollo Theater in Stuttgart, Germany
Picture: Schäfer Trennwandsysteme GmbH

ECO **Hardware for Sanitary Partitions**
Where there's a door ...

Whether under our own trademark or as an OEM partner product of renowned door manufacturers, solutions from ECO Schulte make doors functional all over the world. Where there's a door, ECO Schulte is not far away.

All over the planet, builders and investors are realizing demanding projects together with architects and planners. Clever solutions for doors are always in demand. Our philosophy of system security and reliability in the door is to be found just as much in contemporary architecture as in impressive hotels, public buildings, private residences, royal castles, private apartments and stadia.

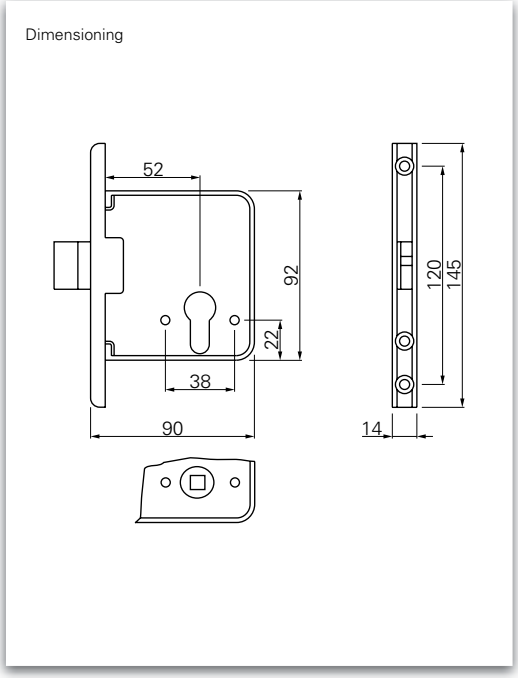

Description

- Available in bathroom or PZ version
- Dead bolt available in nylon or nickel-plated
- Lock case in polished
- 8 mm follower

*Minimum order quantity: 100 pieces

Mortise dead lock **U-face plate** **WC-execution**	Article number	Dead bolt	Material
Mortise dead lock WC	260405	Nylon	Nylon
Mortise dead lock WC	260406	Nickel-plated	Nylon

Mortise dead lock **U-face plate** **PZ execution**	Article number	Dead bolt	Material
Mortise dead lock PZ	260400	Nylon	Nylon
Mortise dead lock PZ*	260401	Nickel-plated	Nylon

Swissdoor ApS • Stenhuggervej 2 • 5471 Søndersø • Danmark Telefon +45 86 28 00 00 • mail@swissdoor.dk • www.swissdoor.dk

Locks for bathroom doors and sanitary partitions ▪ Lock set

Dimensioning

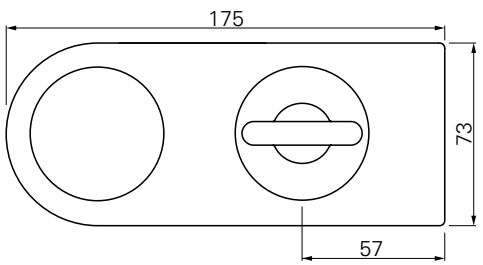

Description

- Traverse type
- For right- or left-hand mounting
- With 2 knobs, WC lock and red/white indicator
- Invisible mounting plate
- Spindle 8 mm
- Other colours on request

White
RAL 9016*

Dark grey
RAL 7030 / 7038*

Red
RAL 3003*

Dark blue
RAL 5011 / 5013*

Blue
RAL 5002*

Black
RAL 9005*

WC lock set Nylon	Dead bolt	Article number	Material
Lock set WC-execution	Dead bolt flush	260456	Nylon
Lock set WC-execution	Dead bolt crank	260459	Nylon
Lock set PZ	Dead bolt flush (right)	260454	Nylon
Lock set PZ	Dead bolt flush (left)	260455	Nylon
Lock set PZ	Dead bolt crank (right)	260452	Nylon
Lock set PZ	Dead bolt crank (left)	260451	Nylon

WC lock set Stainless steel	Dead bolt	Article number	Material
Lock set WC-execution	Dead bolt flush	260456.46	Stainless steel
Lock set WC-execution	Dead bolt crank	260459.46	Stainless steel
Lock set PZ	Dead bolt flush	260455.46	Stainless steel
Lock set PZ	Dead bolt crank	260451.46	Stainless steel

WC lock set Aluminium	Dead bolt	Article number	Material
Lock set WC-execution	Dead bolt flush	260456.30	Aluminium
Lock set WC-execution	Dead bolt crank	260459.30	Aluminium
Lock set PZ	Dead bolt flush	260451.30	Aluminium
Lock set PZ	Dead bolt crank	260455.30	Aluminium

Description

- Nylon version
- Version DIN left or DIN right
- Complete with WC lock and red/white indicator
- Concealed, continuous screw connection
- Available for all common partition wall thicknesses
- Other colours on request

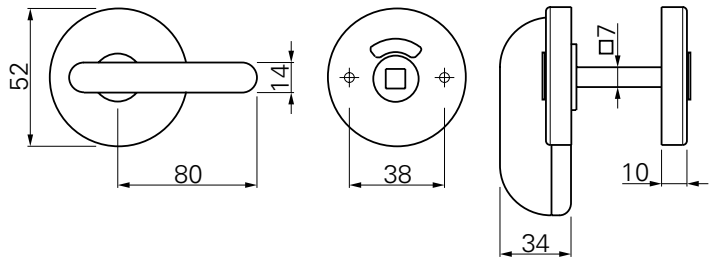

Dimensioning

White	Dark grey	Red	Dark blue	Blue	Black
RAL 9016*	RAL 7030 / 7038*	RAL 3003*	RAL 5011 / 5013*	RAL 5002*	RAL 9005*

Ku

WC-Hasp-type lock		Article number	Material
Hasp-type lock		260499	Nylon
Hasp-type set	additional with two knobs	150450	Nylon

Swissdoor ApS • Stenhuggervej 2 • 5471 Søndersø • Danmark Telefon +45 86 28 00 00 • mail@swissdoor.dk • www.swissdoor.dk

SWiSSDOOR
DØRTEKNIK FOR PROFESSIONELLE

Daycare facility for children „De Laabfrosch“ in Brensbach, Germany
Picture: Schäfer Trennwandsysteme GmbH

ECO **Hardware for Sanitary Partitions**
Nylon handles

Used as basics, ECO handles made of high-quality nylon offer the option of setting colourful accents in architecture. A steel core is covered with polyamide, thus combining a pleasant feel with toughness and durability. ECO nylon handles are wearproof, colour and lightfast. The surfaces are harmless from a health and hygiene point of view, not susceptible to electrostatic charging and dimensionally stable in hot and cold temperatures. ECO handles and accessories in addition to the door handles.

Hinges ▪ Nylon hinge ▪ 24 / 21

Description		
Version	24 / 21	■
	24 / 28	-
Inserts made of steel	3 mm	■
Two-piece version with two nylon caps		■
Concealed fastening		■
Matching washers available as accessories	1 mm	■
	2 mm	■
	3 mm	-

■ Yes - No ◘ On Request

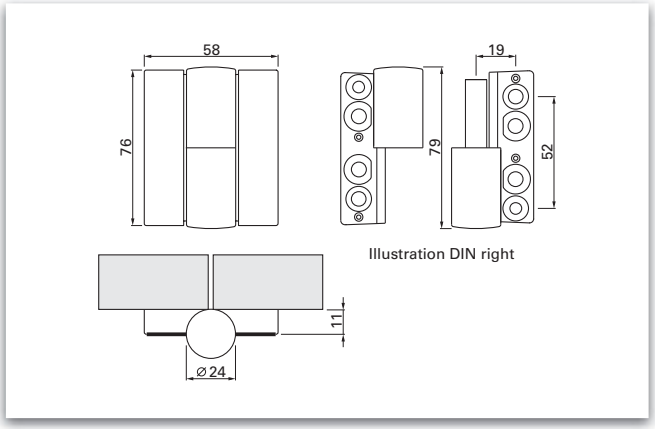

Dimensioning

White
RAL 9016*

Dark grey
RAL 7030 / 7038*

Red
RAL 3003*

Dark blue
RAL 5011 / 5013*

Blue
RAL 5002*

Black
RAL 9005*

Ku

Nylon hinge for unrebated doors	Article number	Description	Material
Nylon hinge	260300	24 / 21 DIN right	Nylon
Nylon hinge	260305	24 / 21 DIN left	Nylon
Washer	260379	1 mm	
Washer	260382	2 mm	

Swissdoor ApS • Stenhuggervej 2 • 5471 Søndersø • Danmark Telefon +45 86 28 00 00 • mail@swissdoor.dk • www.swissdoor.dk

Hinges ▪ Nylon hinge ▪ 24 / 28

Description		
Version	24 / 21	-
	24 / 28	■
Inserts made of steel	3 mm	■
Two-piece version with two nylon caps		■
Concealed fastening		■
Matching washers available as accessories	1 mm	-
	2 mm	-
	3 mm	■

■ Yes - No ◘ On Request

White
RAL 9016*

Dark grey
RAL 7030 / 7038*

Red
RAL 3003*

Dark blue
RAL 5011 / 5013*

Blue
RAL 5002*

Black
RAL 9005*

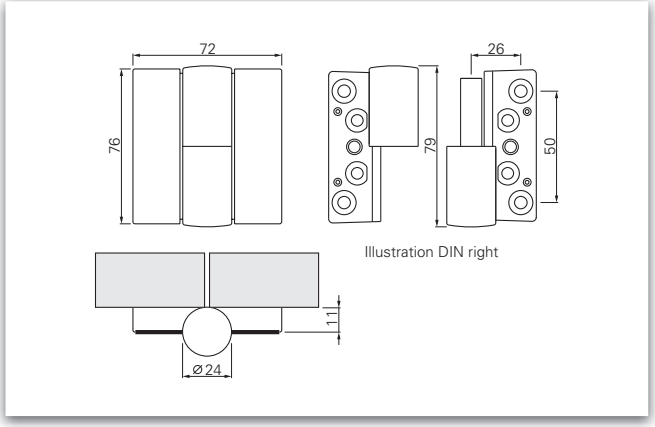

Dimensioning

Nylon hinge for unrebated doors	Article number	Description	Material
Nylon hinge	260350	24 / 28 DIN right	Nylon
Nylon hinge	260355	24 / 28 DIN left	Nylon
Washer	260384	3 mm / DIN right	
Washer	260383	3 mm / DIN left	

Hinges ▪ Nylon (spring) hinge ▪ 24 / 28 ▪ For sanitary partitions with circumferential profile

Description		
Version	24 / 21	-
	24 / 28	■
Inserts made of steel	3 mm	■
Two-piece version with two nylon caps		■
Concealed fastening		■
Matching washers available as accessories truncated	1 mm	-
	2 mm	-
	3 mm	■

■ Yes - No ◘ On Request

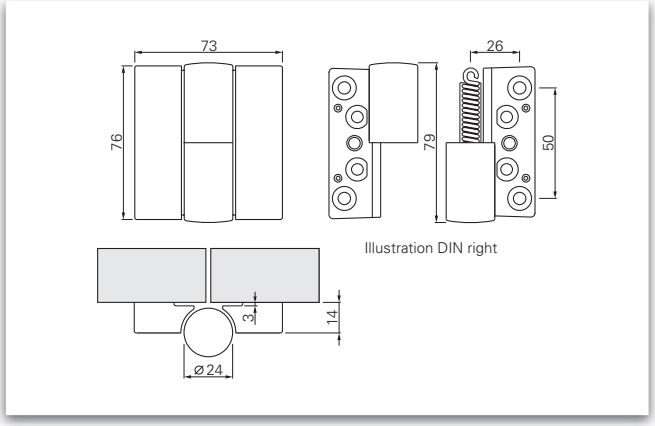

Dimensioning

White
RAL 9016*

Dark grey
RAL 7030 / 7038*

Red
RAL 3003*

Dark blue
RAL 5011 / 5013*

Blue
RAL 5002*

Black
RAL 9005*

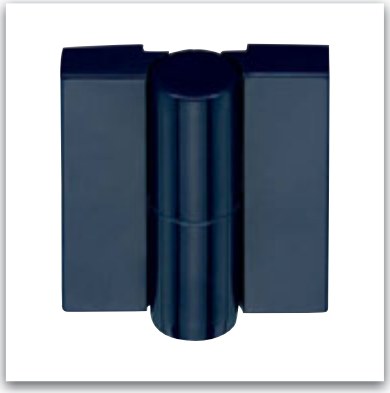

Nylon spring hinge / nylon hinge for unrebated doors	Article number	Description	Material
Nylon hinge	260368	24 / 28 DIN right	Nylon
Nylon hinge	260369	24 / 28 DIN left	Nylon
Nylon spring hinge	260668	24 / 28 DIN right	Nylon
Nylon spring hinge	260669	24 / 28 DIN left	Nylon

Swissdoor ApS • Stenhuggervej 2 • 5471 Søndersø • Danmark Telefon +45 86 28 00 00 • mail@swissdoor.dk • www.swissdoor.dk

Hinges ▪ Nylon (spring) hinge ▪ 24 / 28

Description		
Version	24 / 21	-
	24 / 28	■
Inserts made of steel	3 mm	■
Two-piece version with two nylon caps		■
Concealed fastening		■
Matching washers available as accessories clip able	1 mm	-
	2 mm	-
	3 mm	■

■ Yes - No ◘ On Request

White
RAL 9016*

Dark grey
RAL 7030 / 7038*

Red
RAL 3003*

Dark blue
RAL 5011 / 5013*

Blue
RAL 5002*

Black
RAL 9005*

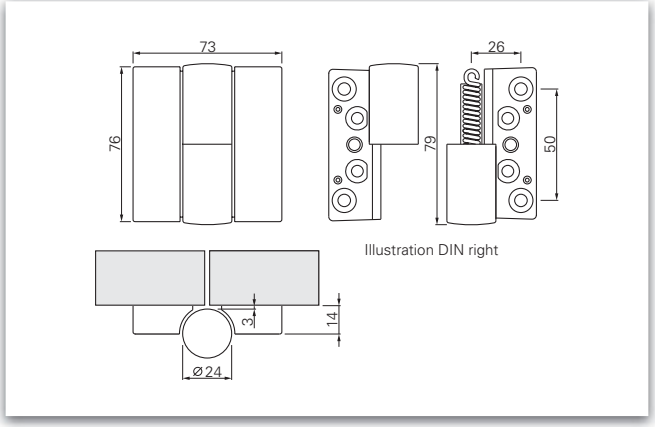

Dimensioning

Nylon spring hinge / nylon hinge for unrebated doors	Article number	Description	Material
Nylon spring hinge	260600	24 / 28 DIN right	Nylon
Nylon spring hinge	260605	24 / 28 DIN left	Nylon
Washer	260384	3 mm / DIN right	
Washer	260383	3 mm / DIN left	

Hinges ▪ Nylon hinge ▪ 24 / 28 ▪ For rising doors

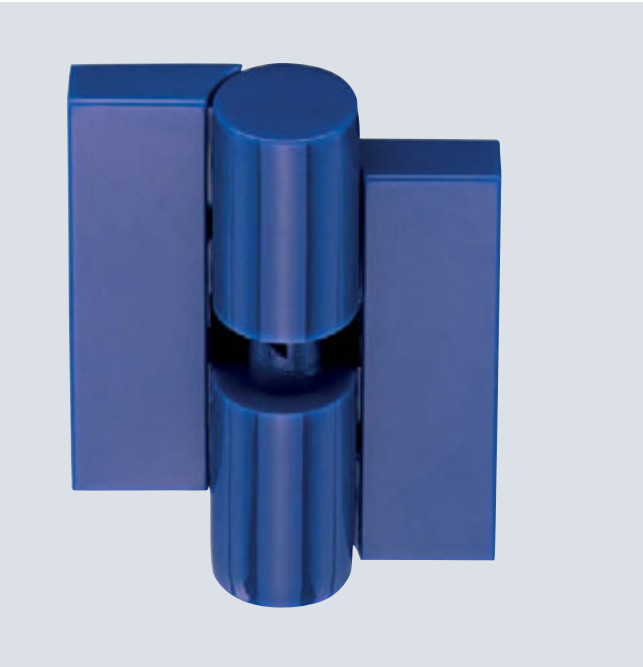

Description		
Version	24 / 21	-
	24 / 28	■
Inserts made of steel	3 mm	■
Rising hinge: self-closing		■
Falling hinge: self-opening		-
Two-piece version with two nylon caps		■
Concealed fastening		■
Matching click-on washers available as accessories	1 mm	-
	2 mm	-
	3 mm	■

■ Yes - No ◘ On Request

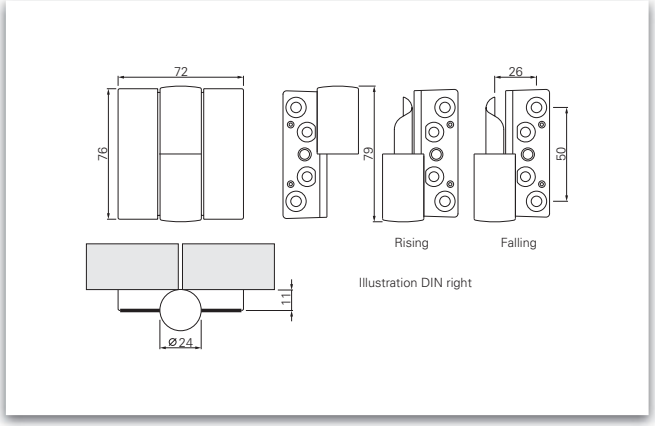

Dimensioning

White
RAL 9016*

Dark grey
RAL 7030 / 7038*

Red
RAL 3003*

Dark blue
RAL 5011 / 5013*

Blue
RAL 5002*

Black
RAL 9005*

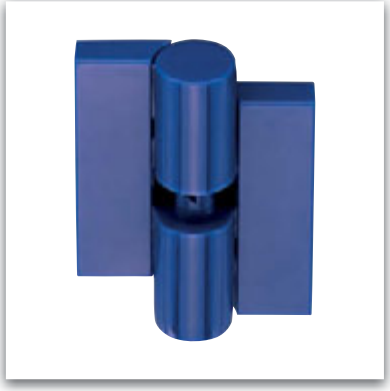

Ku

Nylon (spring) hinge rising unrebated doors	Article number	Description	Material
Nylon hinge	260700	24 / 28, rising DIN right	Nylon
Nylon hinge	260705	24 / 28, rising DIN left	Nylon
Washer	260384	3 mm / DIN right	
Washer	260383	3 mm / DIN left	

Swissdoor ApS • Stenhuggervej 2 • 5471 Søndersø • Danmark Telefon +45 86 28 00 00 • mail@swissdoor.dk • www.swissdoor.dk

Hinges ▪ Nylon (spring) hinge ▪ 24 / 21 ▪ With bare lug on one side

Description		
Version Nylon hinge	24 / 21	■
	24 / 28	-
Version Nylon spring hinge	24 / 21	■
	24 / 28	-
Inserts made of steel	3 mm	■
With bare stainless steel in set on one side		■
Two-piece version with one nylon cap		■
Concealed fastening		■
Matching click-on washers available as accessories	1 mm	-
	2 mm	-
	3 mm	-

■ Yes - No ◘ On Request

White
RAL 9016*

Dark grey
RAL 7030 / 7038*

Red
RAL 3003*

Dark blue
RAL 5011 / 5013*

Blue
RAL 5002*

Black
RAL 9005*

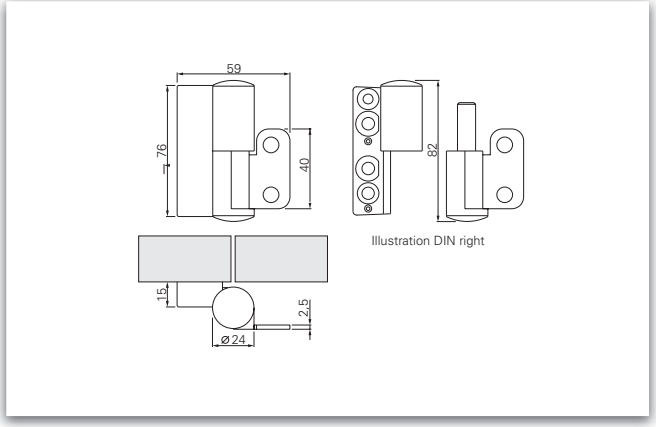

Dimensioning

Nylon (spring) hinge for unrebated doors	Article number	Description	Material
Nylon hinge	260800	24 / 21 DIN right	Nylon
Nylon hinge	260805	24 / 21 DIN left	Nylon
Nylon spring hinge	260810	24 / 21 DIN right	Nylon
Nylon spring hinge	260815	24 / 21 DIN left	Nylon

Hook made of nylon ▪ with bumper

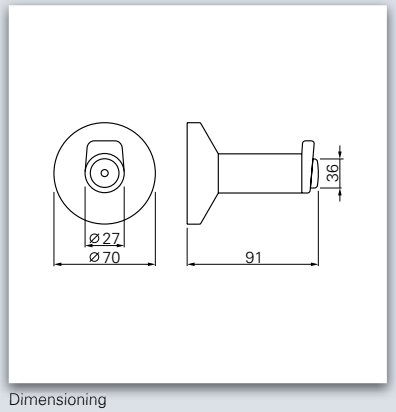

Dimensioning

- Coat hook made of nylon
- With integrated bumper
- Concealed fastening
- Other colours on request

White RAL 9016* | Dark grey RAL 7030 / 7038* | Red RAL 3003* | Dark blue RAL 5011 / 5013* | Blue RAL 5002* | Black RAL 9005*

	Article number	Description	Material
Hook bumper	260030	With bumper	Nylon

Knob made of nylon ▪ with and without bumper

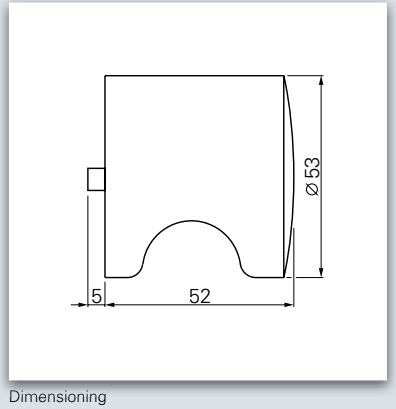

Dimensioning

- With positioning studs to prevent dislocation
- Other colours on request

White RAL 9016* | Dark grey RAL 7030 / 7038* | Red RAL 3003* | Dark blue RAL 5011 / 5013* | Blue RAL 5002* | Black RAL 9005*

	Article number	Description	Material
Knob	110826	With bumper	Nylon
Knob	110825	Without Bumper	Nylon
Knob Set	110828	Without Bumper	Nylon

Swissdoor ApS • Stenhuggervej 2 • 5471 Søndersø • Danmark Telefon +45 86 28 00 00 • mail@swissdoor.dk • www.swissdoor.dk

Coat hook made of nylon

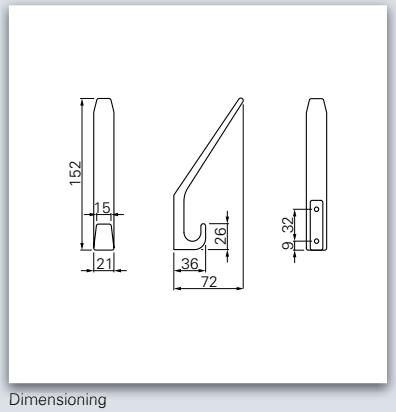

Dimensioning

- Concealed fastening
- Other colours on request

White	Dark grey	Red	Dark blue	Blue	Black
RAL 9016*	RAL 7030 / 7038*	RAL 3003*	RAL 5011 / 5013*	RAL 5002*	RAL 9005*

Ku

	Article number	Material
Hat and coat hook	260030	Nylon

Coat hook made of nylon

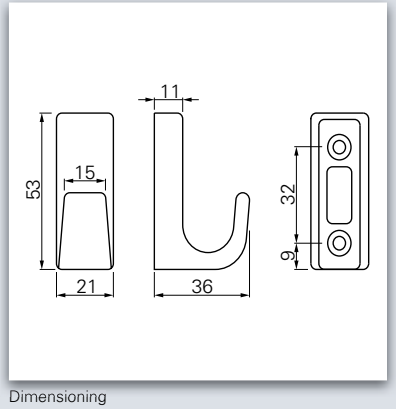

Dimensioning

- Concealed screw-on fitting strip
- Other colours on request

White	Dark grey	Red	Dark blue	Blue	Black
RAL 9016*	RAL 7030 / 7038*	RAL 3003*	RAL 5011 / 5013*	RAL 5002*	RAL 9005*

Ku

	Article number	Material
Coat hook	260100	Nylon

Push-pull handle made of nylon ▪ With or without bumper

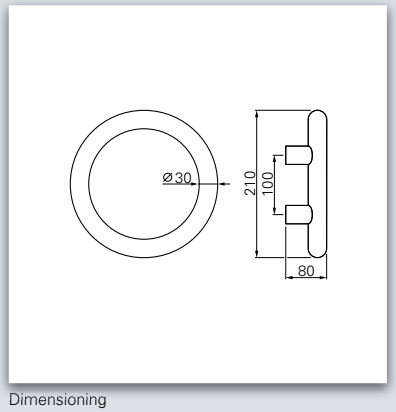

Dimensioning

- Diameter of handle 30 mm
- Distance between centres 100 mm
- With or without bumper
- Mounting is simple and quick
- Other colours on request

White	Dark grey	Red	Dark blue	Blue	Black
RAL 9016*	RAL 7030 / 7038*	RAL 3003*	RAL 5011 / 5013*	RAL 5002*	RAL 9005*

Push-pull handle circular (inside) without bumper	Article number	Ø	Height	Material
Push-pull handle circular (outside)	255551	30 mm	80 mm	Nylon
Push-pull handle circular (outside)	255552	30 mm	73 mm	Nylon
Push-pull handle circular (outside)	255554	30 mm	64 mm	Nylon

Push-pull handle circular (outside) with bumper	Article number	Ø	Height	Material
Push-pull handle circular (outside)	255553	30 mm	80 mm	Nylon

Swissdoor ApS • Stenhuggervej 2 • 5471 Søndersø • Danmark Telefon +45 86 28 00 00 • mail@swissdoor.dk • www.swissdoor.dk

Fixing system for polyamide push-pull handle

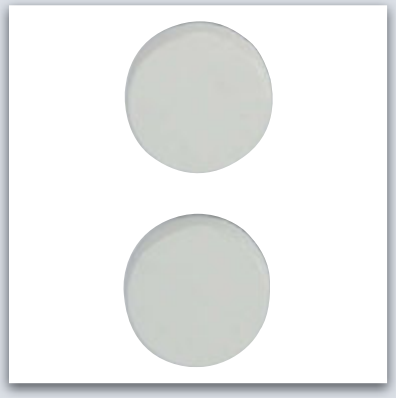

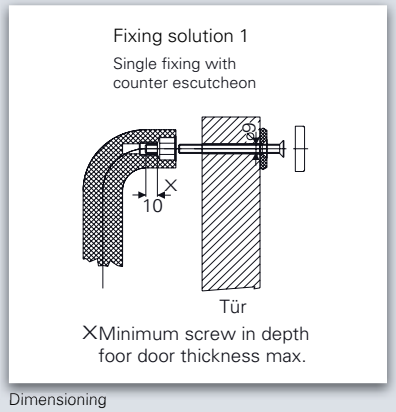

Dimensioning

- Available for the following thicknesses:: Fixing set 1:
  - 5 - 20 mm
  - 20 - 40 mm
  - 40 - 60 mm
  - 60 - 80 mm

Ku

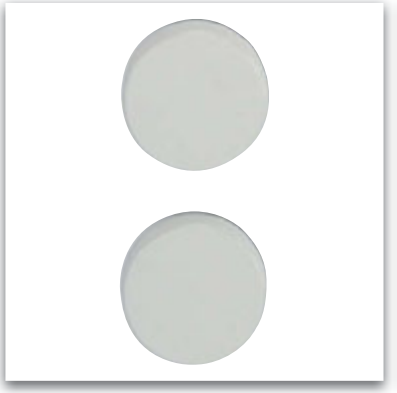

Fixing system for polyamide push-pull handle	Article number	Ø	Description	Material
Solution 1	255802	30 mm	Single fixing with counter escutcheon	Nylon

Partition-foot element made of nylon

Ø 40 mm

Ø 20 mm

- Concealed fastening
- Other colours on request

White	Dark grey	Red	Dark blue	Blue	Black
RAL 9016*	RAL 7030 / 7038*	RAL 3003*	RAL 5011 / 5013*	RAL 5002*	RAL 9005*

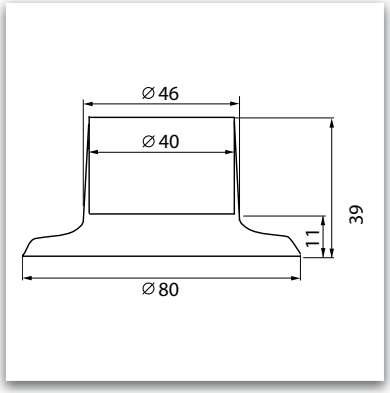

Ku

	Article number	Ø	Material
Partition-foot element	260425	40 mm	Nylon

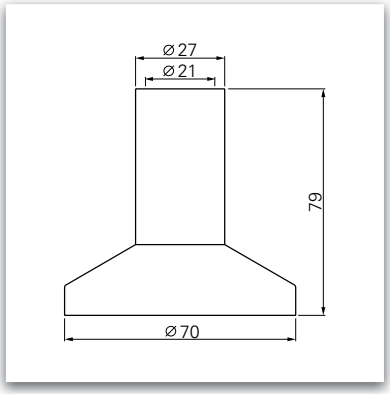

Ku

	Article number	Ø	Material
Partition-foot element	260020	20 mm	Nylon

Swissdoor ApS • Stenhuggervej 2 • 5471 Søndersø • Danmark Telefon +45 86 28 00 00 • mail@swissdoor.dk • www.swissdoor.dk

Toilet roll holder made of nylon

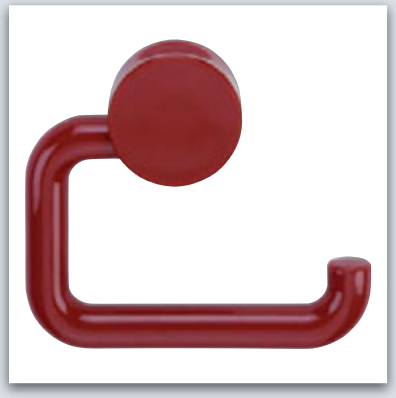

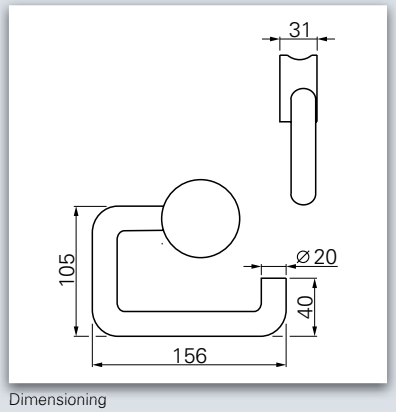

Dimensioning

- Concealed screw fastening
- Other colours on request

White RAL 9016*	Dark grey RAL 7030 / 7038*	Red RAL 3003*	Dark blue RAL 5011 / 5013*	Blue RAL 5002*	Black RAL 9005*

Ku

	Article number	Material
Toilet roll holder	260200	Nylon

Spare toilet roll holder made of nylon

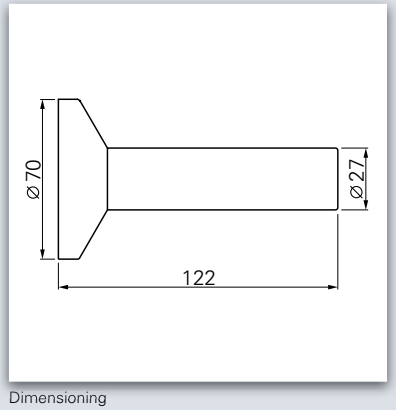

Dimensioning

- Concealed screw fastening
- Wall-mounted
- Other colours on request

White RAL 9016*	Dark grey RAL 7030 / 7038*	Red RAL 3003*	Dark blue RAL 5011 / 5013*	Blue RAL 5002*	Black RAL 9005*

Ku

	Article number	Material
Spare toilet roll holder	260010	Nylon

WC brush set

With glass container

With nylon container

- Wall-mounted
- Holder made of nylon
- With removable brush holder made of satin glass or plastic
- Other colours on request

White	Dark grey	Red	Dark blue	Blue	Black
RAL 9016*	RAL 7030 / 7038*	RAL 3003*	RAL 5011 / 5013*	RAL 5002*	RAL 9005*

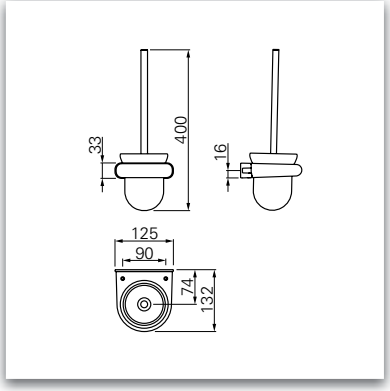

	Article number	Material container
WC brush set	260110	Glass
Replacement brush	260110.17	

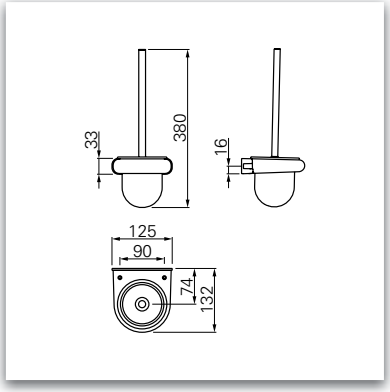

Ku

	Article number	Material container
WC brush set	260120	Nylon
Replacement brush	260110.17	

Swissdoor ApS • Stenhuggervej 2 • 5471 Søndersø • Danmark Telefon +45 86 28 00 00 • mail@swissdoor.dk • www.swissdoor.dk

SWISSDOOR
DØRTEKNIK FOR PROFESSIONELLE

Sanitary partitions ▪ Colours

Similarly RAL*	Standard	No.	Colour
RAL 3003		01	red
RAL 9005		02	black
RAL 9010		08	white
RAL 5002		09	blue
RAL 5011 / 5013		21	dark blue
RAL 7030 / 7038		37	dark grey

On request

RAL 8022		04	dark brown
RAL 6029		05	green
RAL 1021		07	yellow
RAL 7032 / 9002		11	grey - white
RAL 3007		18	dark red
RAL 6012		19	dark green
RAL 7043		20	grey
RAL 9016		15	white

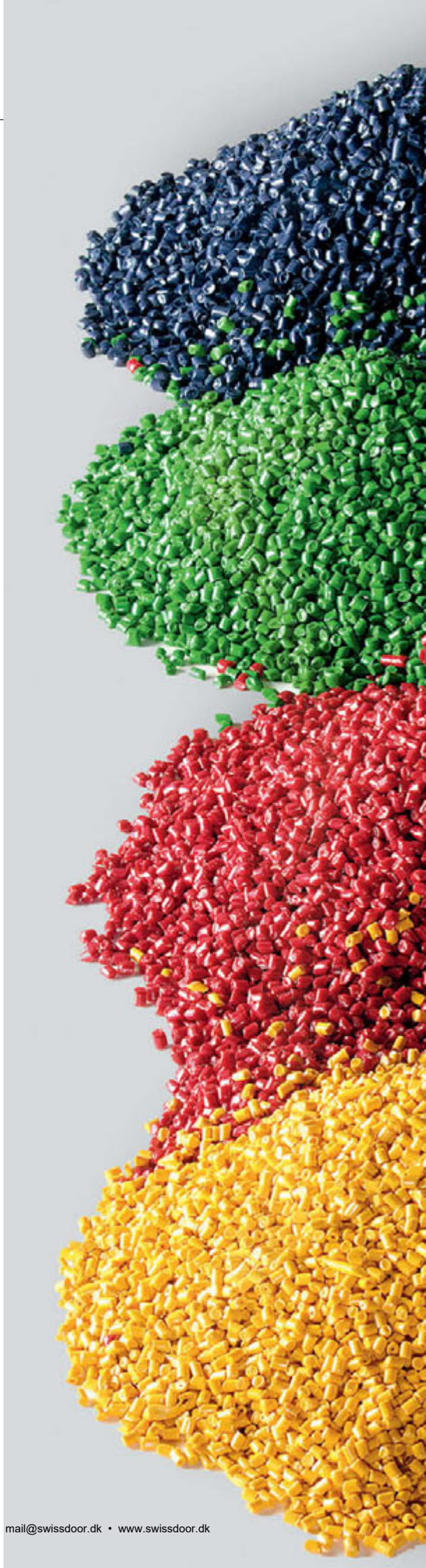

Swissdoor ApS • Stenhuggervej 2 • 5471 Søndersø • Danmark Telefon +45 86 28 00 00 • mail@swissdoor.dk • www.swissdoor.dk

Panic, Lock and Bolting Technology

Always on the safe side.

If panic breaks out

Panic bolting technology ensures that people can get out of a danger zone at any time, even in a panic situation. One push on the horizontal activation element is all it takes and the door springs open – irrespective of whether it was locked or not.

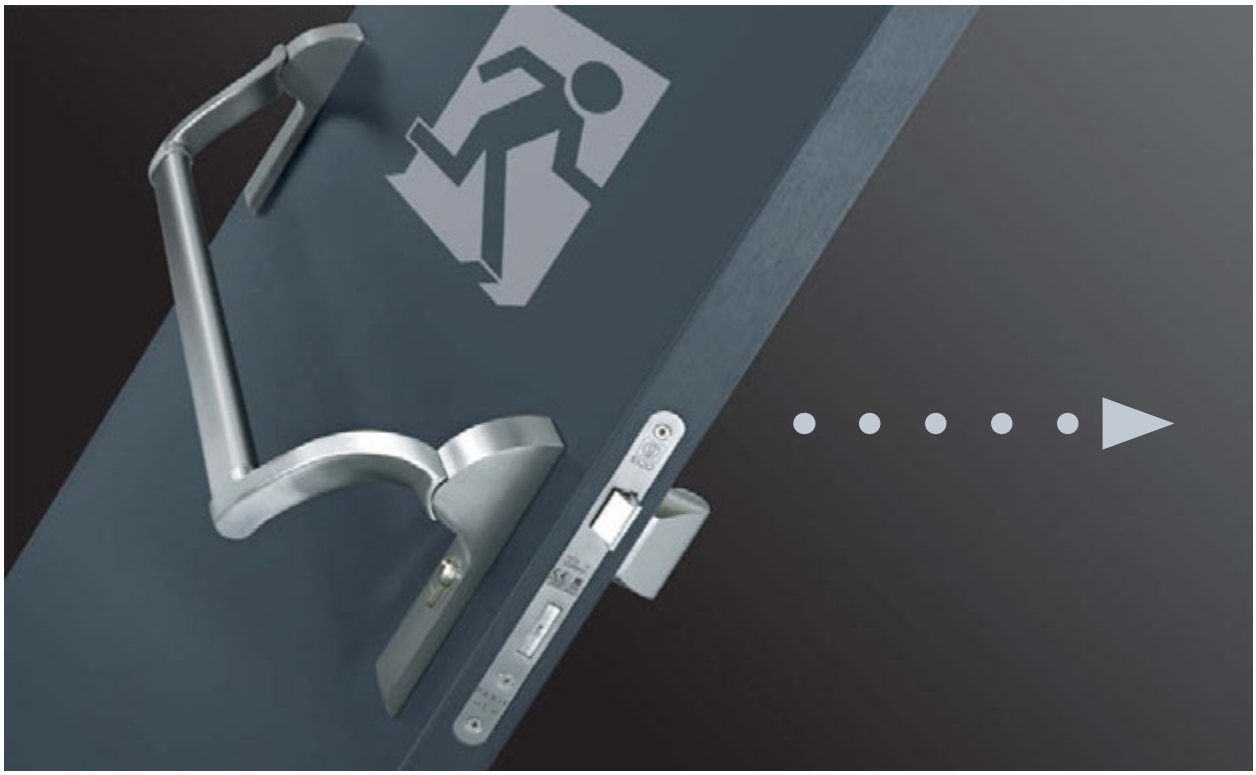

ECO unlocking solutions also open up the escape route when a crowd of people press against the door. And even the strength of a child is sufficient to open the door to escape from a fire or toxic smoke.

ECO bolting technology satisfies European standards **EN 1125** (Panic locks with horizontal activation bars) and **EN 179** (Emergency exit locks with handles or impact plates) – and demonstrates the company's expertise. The lock and release element are developed and manufactured in coordination with one another.

With panic systems in particular, it is important to perceive the door as a system, because it's not only the panic lock, door lock and fitting that have to interact perfectly so that the door can help in a life-threatening situation. The door closer and hinges have a decisive influence on the ability to satisfy the high demands set by the standard.

Swissdoor ApS • Stenhuggervej 2 • 5471 Søndersø • Danmark Telefon +45 86 28 00 00 • mail@swissdoor.dk • www.swissdoor.dk

Differentiation by building utilization

The type of room and utilization of the building are decisive when choosing the right panic door combination. European standards **DIN EN 1125** and **DIN EN 179** define the fittings of panic doors and emergency exits. Emergency exit locks in compliance with **DIN EN 179** are not normally subjected to use by the general public. It is assumed here that the users of the building are acquainted with the escape routes, so conventional panic lock technology with a handle or impact plate are sufficient here. Panic locks with a horizontal activation bar in accordance with **DIN EN 1125**, on the other hand, are intended for use in buildings frequented by the general public. Our panic systems in conformance with **DIN EN 1125** ensure that persons who have panicked and are not acquainted with the functions of the door can always get out of the building safely.

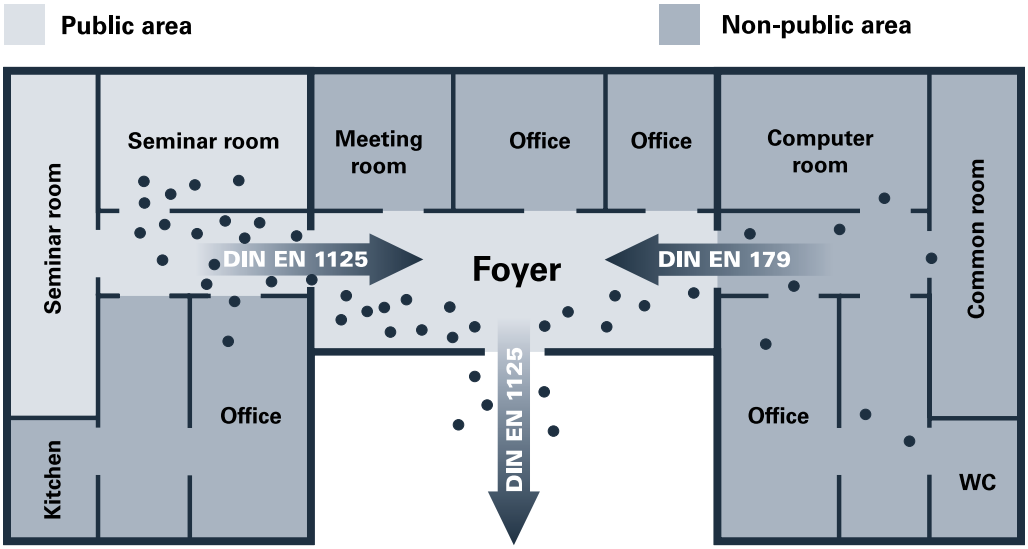

Emergency exit locks with door handle

EN 179

Emergency exit locks in accordance with **DIN EN 179** for buildings or building sections not open to the general public and all areas where access by the general public can be excluded. Side entrances or doors in these buildings or building sections are only used by authorized persons.

Emergency exit locks operated mechanically by means of a handle or impact plate.

Areas of application:
- Private residential complexes
- School classrooms
- Non-public administration buildings or industrial companies
- Non-public areas of administrative buildings
- Non-public areas of airports, banks, shopping centres

Users have advance knowledge of how to open the escape door.

Panic locks with a horizontal activation bar

EN 1125

Panic locks in accordance with **DIN EN 1125** are used in public buildings in which the users are not acquainted with the functioning of the escape door but must nevertheless be able to operate them without instruction.

Panic locks activated mechanically by means of a horizontal handle or push-bar.

Areas of application:
- Hospitals and clinics
- Escape routes in schools and training centres
- Public administration buildings
- Stadia, arenas and events buildings
- Shopping centres

Users have **no** advance knowledge of how to open the escape door.

Clarity through marking

Whether or not a product complies with the standard, thus acquiring approval for use in escape and rescue routes, can be seen from a classification code on the product

Classification Code DIN EN 1125

The standard requires that all products tested for compliance with it be classified with a 9-digit code.
Here is the classification code of the ECO EPN 900 Pushbar:

3	7	6	1	1	3	2	1	A

1) Utilization category (Class 3)
2) Suitability for permanent use (Class 6, 7)
3) Mass of the test door (Class 5, 6)
4) Fire resistance of FH / RS doors (Class 0, 1)
5) Safety – Personal protection (Class 1)
6) Corrosion resistance (Class 3, 4)
7) Security – Break-in protection (Class 2)
8) Protrusion of the fitting (Class 2)
9) Activation type (Type A, B)

Example of a CE marking

The CE marking documents that a product complies with standards. The example given here is for the ECO panic lock system EPN 900 tested in accordance with **DIN EN 1125**. With the CE marking, the manufacturer documents that his product complies with the applicable EU directives.

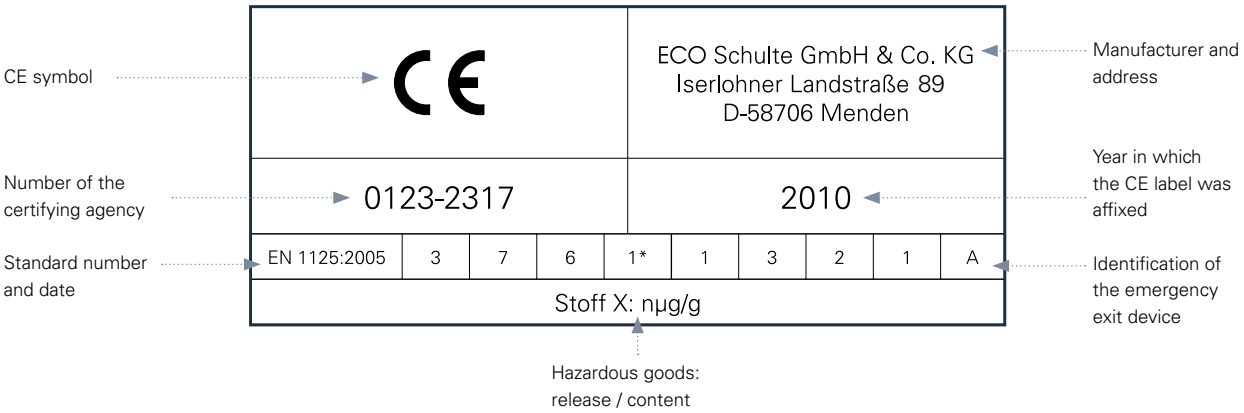

Swissdoor ApS • Stenhuggervej 2 • 5471 Søndersø • Danmark Telefon +45 86 28 00 00 • mail@swissdoor.dk • www.swissdoor.dk

Panic door combinations

ECO panic door fittings: Screw-on safety and security

ECO Schulte fittings for escape and rescue route doors guarantee easy opening in an emergency. Even if the doors are locked shut, they can be opened without a key in accordance with standards with only one simple hand movement using a force of max. 80 N. The door fittings are designed in such a way that there is no risk of clothing getting caught in them when people flee the building. The free end of the door handle is returned in the direction of the door surface at an angle of at least 30 degrees in order to preclude the obstruction of fleeing persons and the risk of injury by the door handle.

Panic door combinations – tested jointly

ECO Schulte considers panic door combinations to be a perfectly coordinated system. Only the perfect interplay of all components guarantees perfect conformity with the standard right down to the last detail. Although the lock, fitting and triggering mechanism are the key functions of this panic door combination, the use of a coordinated door closer and high-quality hinges is of equal importance, because these functional elements of the ECO system also make a decisive contribution towards ensuring that a door can guarantee a safe way out if panic breaks out. Because safety and security are inseparable, ECO Schulte recommends the use of a complete system from a single source.

This ECO panic door combination consists of a fitting, horizontal panic bar, panic switch lock and counterpiece.

Safety and security are inseparable: only with ECO door closers and ECO hinges is the single source panic door combination complete.

Panic lock functions

A panic lock functions in line with a defined principle: when the handle or panic bar is activated from the inside, the lock must spring open abruptly with a defined amount of force. Not only the latch but, if needed the entire bolt is pulled back here. This basic function can be refined and varied using ECO technology:

Panic Function B – Switchover function

Panic Function B with a handle on both sides is designed for buildings open to the general public. While the handle on the inside has a conventional panic function, the outside handle can be adjusted or released mechanically as required. The two handles are linked by a two-part hub. Area of application: escape doors in administration buildings, retirement homes, side entrance doors (e.g. schools and hotels).

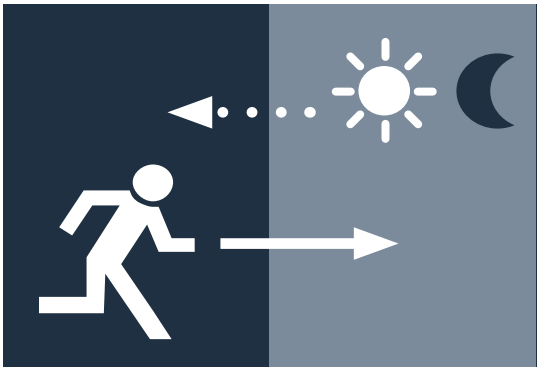

Panic Function E: Alternating function

Panic Function E is intended for buildings with access for a defined group of persons. A blind plate or knob is mounted on the outside and the door can only be opened with a key. Conventional panic function per handle from the inside. Area of application: heating room access doors, elevator systems, underground/ multi-storey carparks, storage and commercial buildings, entrance doors in rented apartment complexes and blocks of flats.

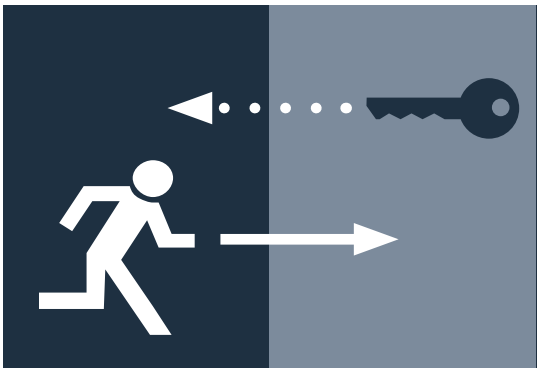

Panic Function D – Transit function

Panic Function D is intended for doors with a pure escape function which are not used otherwise. When the panic function is activated from the inside, the door is not only opened, the outer handle is coupled in, too. In this setting, the door does not constitute an obstacle when entering the building or when escaping from it. The original function can be reset with a key. The coupling is done mechanically via a two-part hub. Area of application: escape doors in administration/ office buildings, retirement homes, side entrance doors (e.g. schools and hotels).

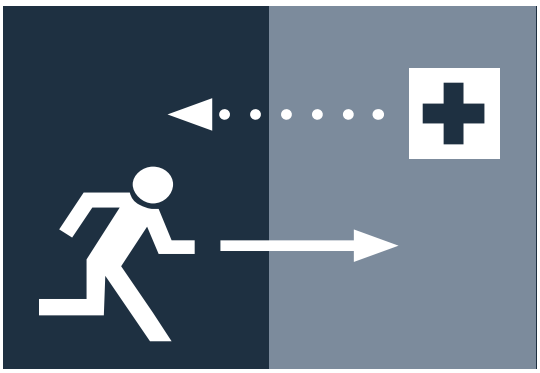

Swissdoor ApS • Stenhuggervej 2 • 5471 Søndersø • Danmark Telefon +45 86 28 00 00 • mail@swissdoor.dk • www.swissdoor.dk

Two concepts for secure functioning

ECO Schulte offers two horizontal panic door locking systems which differ in their aesthetics and function. They are suitable for buildings in which the outbreak of panic is at least likely in the event of danger. The objective is to provide a safe escape opportunity with minimum effort and without any advance knowledge of the functioning of the escape door lock.

Pushbar – Panic door lock with a tube

The ECO Pushbar is a Type A mechanical panic door lock in compliance with Euro standard **EN 1125**. This panic door lock unlocks reliably, even when a force is already acting on the door. Movement of the horizontally attached tube in the direction of escape in a downward arch releases the locking mechanism abruptly via a steel gear system. This function can be activated from every point along the bar. The ECO Pushbar can be bolted on or through the door and is protected against vandalism, depending on the construction and design. Available in standard or special lengths with a galvanized steel core with aluminium F1 or nylon coating or in high-grade stainless steel.

Touchbar – Panic door lock with a pressure bar

The ECO Touchbar is a Type B mechanical panic door lock in compliance with Euro standard **EN 1125**. This panic door lock unlocks reliably, even when a force is already acting on the door. Movement of the horizontally attached touch bar in the direction of escape releases the locking mechanism and lock abruptly. The release function can be activated from every point along the effective length of the touch profile. The ECO Touchbar can be bolted on or through the door and is protected against vandalism, depending on the construction and design. Available in standard or special lengths with a galvanized steel core with aluminium F1 or nylon coating or in high-grade stainless steel.

Reliable and precise as clockwork

ECO Schulte can look back on many years of experience in the development and manufacture of locks. ECO Schulte locks provide the highest possible level of security and reliability in all areas and function as precisely as clockwork. Long-lasting functionality and a long service life are guaranteed by state-of-the-art manufacture using high-quality materials and construction measures. As panic locks, ECO locks correspond with horizontal panic triggering elements and conventional ECO fittings in the ideal manner. A defined trigger impulse ensures that the door springs open abruptly.

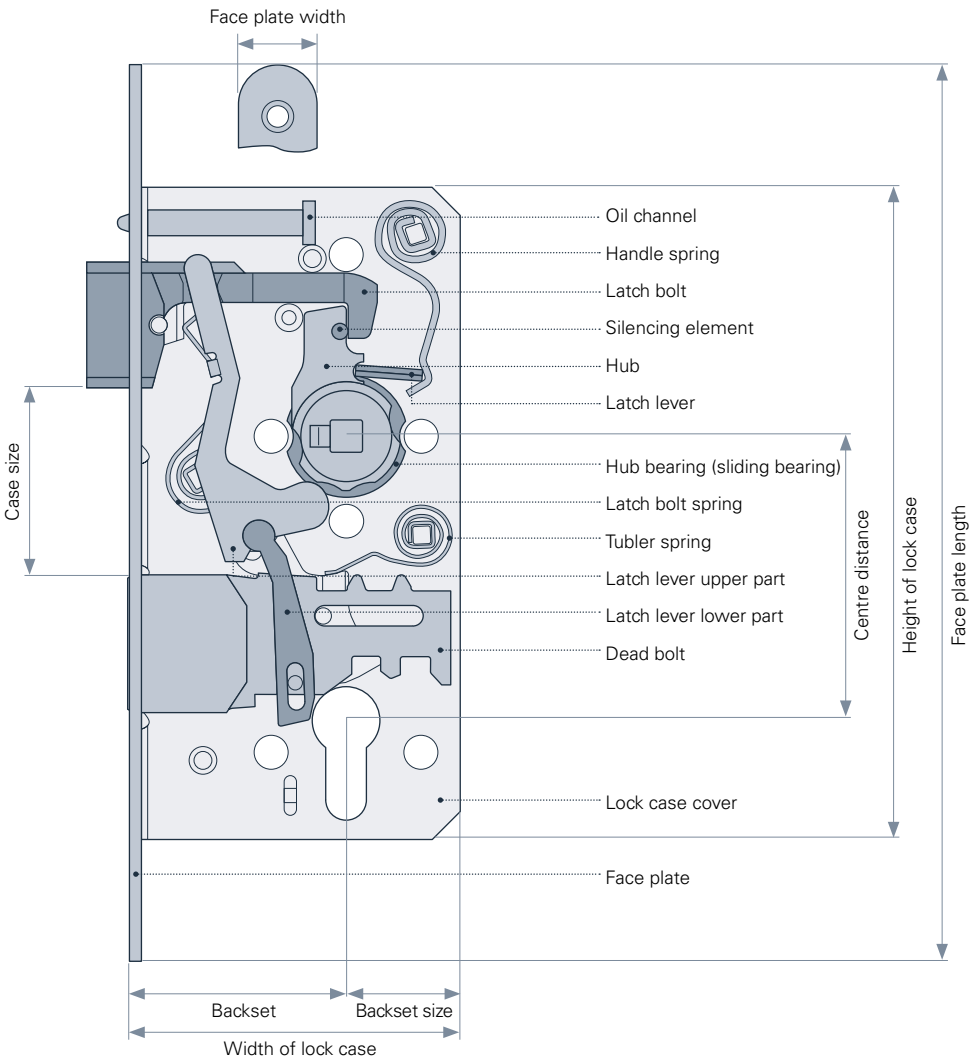

Swissdoor ApS • Stenhuggervej 2 • 5471 Søndersø • Danmark Telefon +45 86 28 00 00 • mail@swissdoor.dk • www.swissdoor.dk

Locks of the very best

Optional silencing element and oil channel

ECO locks have the option of silencing by means of a sound insulating rubber element on the latch bolt. Another ECO speciality is an integrated oil channel that lubricates all of the moving parts of the lock. No additional recesses in the lock pocket are required because all DIN dimensions are complied with.

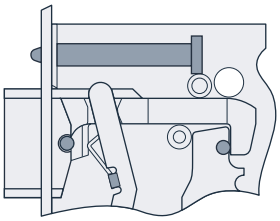

Triple latch bolt

Instead of hitting the strike plate, the ECO triple latch bolt is pressed back into the lock by a lever mechanism. An additional milling groove should be cut in the lock pocket to install the crank latch.

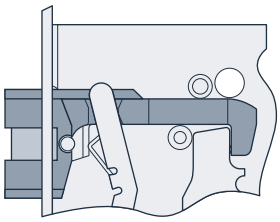

Spring hub and sliding bearing

A spring in the handle hub jams the pinion of the handle. This results in the precise guiding of the split spindle and thereby the door handle. Tolerances are compensated. The hub is smoothly mounted in a wear-resistant plastic bearing. ECO mortise locks with sliding bearings provide the best possible ease of operation, even when used intensively.

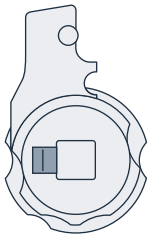

Protection bushings

ECO offers locks with protection bushings fitted in the standard lock attachment drill holes to prevent wood or metal drill shavings from falling into the locking mechanism during assembly and impairing its functionality.

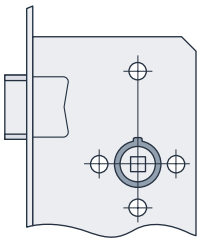

Locks and strike plates for all notch types

Mortise locks with a face plate mounted on one side and angular striking plates are required for rebated doors. A mortise lock with a centred face plate and flat striking plate is required for flush edge doors.

Profile rebated door Profile unrebated door

Mortise locks left/right

Mortise locks are designated in accordance with **DIN 107** from the side of the door where the hinges are visible. Hinges visible on the left side = DIN left, hinges visible on the right side = DIN right.

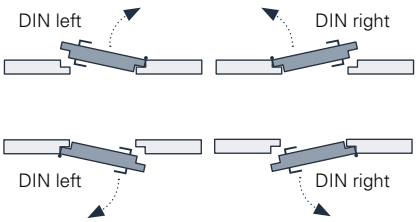

TABLE OF CONTENTS

Panic bar systems ▪ Touchbar

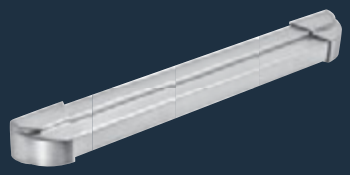

EPN 2000
Stainless steel
Page 394

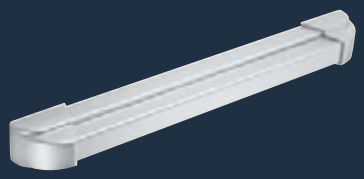

EPN 2000
Aluminium
Page 394

EPN 2000 II
Stainless steel
Page 400

EPN 2000 II
Aluminium
Page 400

reddot design award
winner 2010

Designpreis
Deutschland
2011
NOMINEE

Panic bar systems ▪ Pushbar

EPN 900 II
Stainless steel
Page 408

EPN 900 II
Aluminium F1
Page 408

EPN 900 II
Nylon black/red
Page 408

EPN 900 III
Stainless steel
Page 412

EPN 900 III
Aluminium F1
Page 412

EPN 900 III
Black / red coated
Page 412

Swissdoor ApS • Stenhuggervej 2 • 5471 Søndersø • Danmark Telefon +45 86 28 00 00 • mail@swissdoor.dk • www.swissdoor.dk

TABLE OF CONTENTS

Panic locks ▪ For single-leaf wooden and metal doors

GBS 81
Page 448

GBS 82
Page 450

GBS 83
Page 452

GBS 90
Page 454

GBS 91
Page 456

GBS 92
Page 458

Panic locks ▪ For double-leaf wooden and metal doors

GBS 83
Page 452

GBS 84
Page 453

GBS 93
Page 460

GBS 94
Page 462

Panic locks ▪ For single-leaf profile frame doors

GBS 71
Page 440

GBS 76
Page 446

GBS 96
Page 464

Panic locks ▪ For double-leaf profile frame doors

GBS 72
Active leaf
Page 442

GBS 73
Passive leaf
Page 444

GBS 76
Page 446

GBS 97
Active leaf
Page 466

GBS 98
Passive leaf
Page 468

TABLE OF CONTENTS

Mortise locks ▪ For wooden doors

GBS 12
Page 418

GBS 15
Page 420

GBS 31
Page 422

GBS 31 C
Latch bolt
Page 424

GBS 31 E
Dead bolt
Page 426

GBS 36
Swiss dimensions
Page 428

GBS 38
Swiss dimensions
Page 430

GBS 39
Swiss dimensions
Page 432

Mortise locks ▪ For profile frame doors

GBS 60
Page 434

Fire-proof mortise locks ▪ For wooden and steel doors

GBS 81
Page 448

GBS 82
Page 450

Swissdoor ApS • Stenhuggervej 2 • 5471 Søndersø • Danmark Telefon +45 86 28 00 00 • mail@swissdoor.dk • www.swissdoor.dk

TABLE OF CONTENTS

Fire-proof mortise locks ▪ For single-leaf profile frame doors

GBS 70
Page 438

GBS 71
Page 440

GBS 76
Page 446

Fire-proof mortise locks ▪ For double-leaf profile frame doors

GBS 72
Active leaf
Page 442

GBS 73
Passive leaf
Page 444

GBS 76
Page 446

Dual locking device

System 1
Page 470

System 2
Page 471

Accessories

Accessory Set
GBS 73
Page 474

Accessory Set
GBS 82-84
Page 475

Accessory Set
GBS 94
Page 478

Accessory Set
GBS 98
Page 480

TABLE OF CONTENTS

Panic set acc. to **EN 1125** for single and double-leaf wooden and metal doors

Panic set
for double-leaf wooden and metal doors

PE 2.2PB	Page 482
PE 2.2PD	Page 483
PE 2.2PE	Page 484
PE 2.2TB	Page 485
PE 2.2TD	Page 486
PE 2.2TE	Page 487

Panic set
for single-leaf wooden and metal doors

PE 1.1PB	Page 488
PE 1.1PD	Page 489
PE 1.1PE	Page 490
PE 1.1TB	Page 491
PE 1.1TD	Page 492
PE 1.1TE	Page 493

Panic set acc. to **EN 1125** for single and double-leaf profile frame doors

Panic set
for double-leaf profile frame doors

PPE 2.2PB	Page 494
PPE 2.2PD	Page 495
PPE 2.2PE	Page 496
PPE 2.2TB	Page 497
PPE 2.2TD	Page 498
PPE 2.2TE	Page 499

Panic set
for single-leaf profile frame doors

PPE 1.1PB	Page 500
PPE 1.1PD	Page 501
PPE 1.1PE	Page 502
PPE 1.1TB	Page 503
PPE 1.1TD	Page 504
PPE 1.1TE	Page 505

Swissdoor ApS • Stenhuggervej 2 • 5471 Søndersø • Danmark Telefon +45 86 28 00 00 • mail@swissdoor.dk • www.swissdoor.dk

Panic set acc. to **EN 179**
for single-leaf wooden and metal doors combination for emergency exits

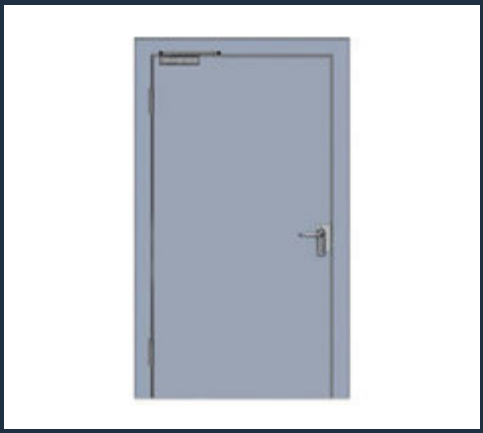

Panic set
for single-leaf wooden and metal doors

EE 1.1HB	Page 506
EE 1.1HD	Page 507
EE 1.1HE	Page 508

Panic set acc. to **EN 179**
for single-leaf profile frame doors combination for emergency exits

Panic set
for single-leaf profile frame doors

PEE 1.1HB	Page 509
PEE 1.1HD	Page 510
PEE 1.1HE	Page 511

ECO **EPN 2000**

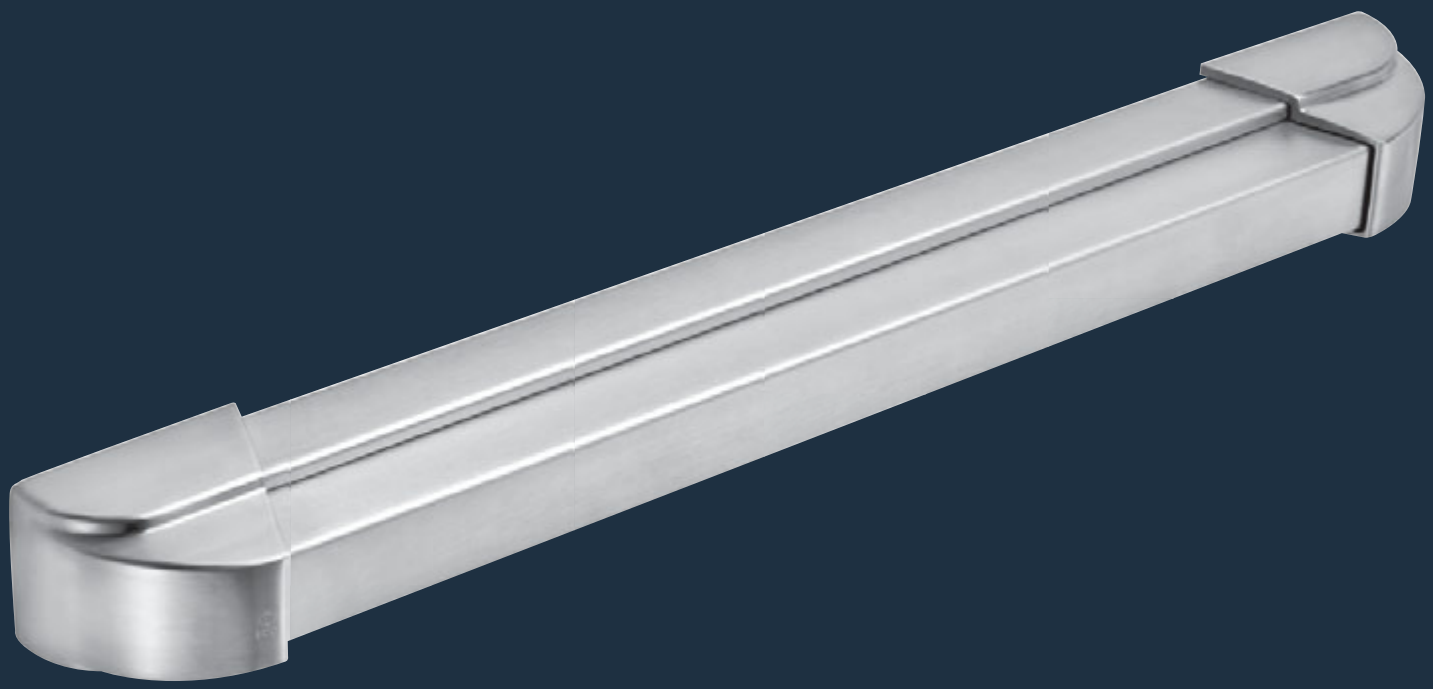

Swissdoor ApS • Stenhuggervej 2 • 5471 Søndersø • Danmark Telefon +45 86 28 00 00 • mail@swissdoor.dk • www.swissdoor.dk

EPN 2000 ▪ Touchbar

Product characteristics		
Mode of operation	Touchbar Pushbar	■ -
Finishes	Stainless steel Aluminium F1 Coloured coated	■ ■ ◘
Fixing axis	1.000 mm* 1.250 mm*	■ ■
DIN left / DIN right useable		■
Suitable for the use on fire- and smoke control doors	F	■
Tested acc. EN / DIN	EN 1125	■

■ Yes - No ◘ Further colors on request

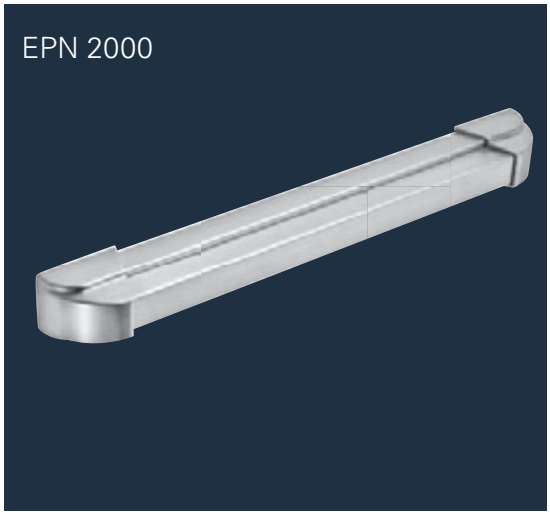

A

B

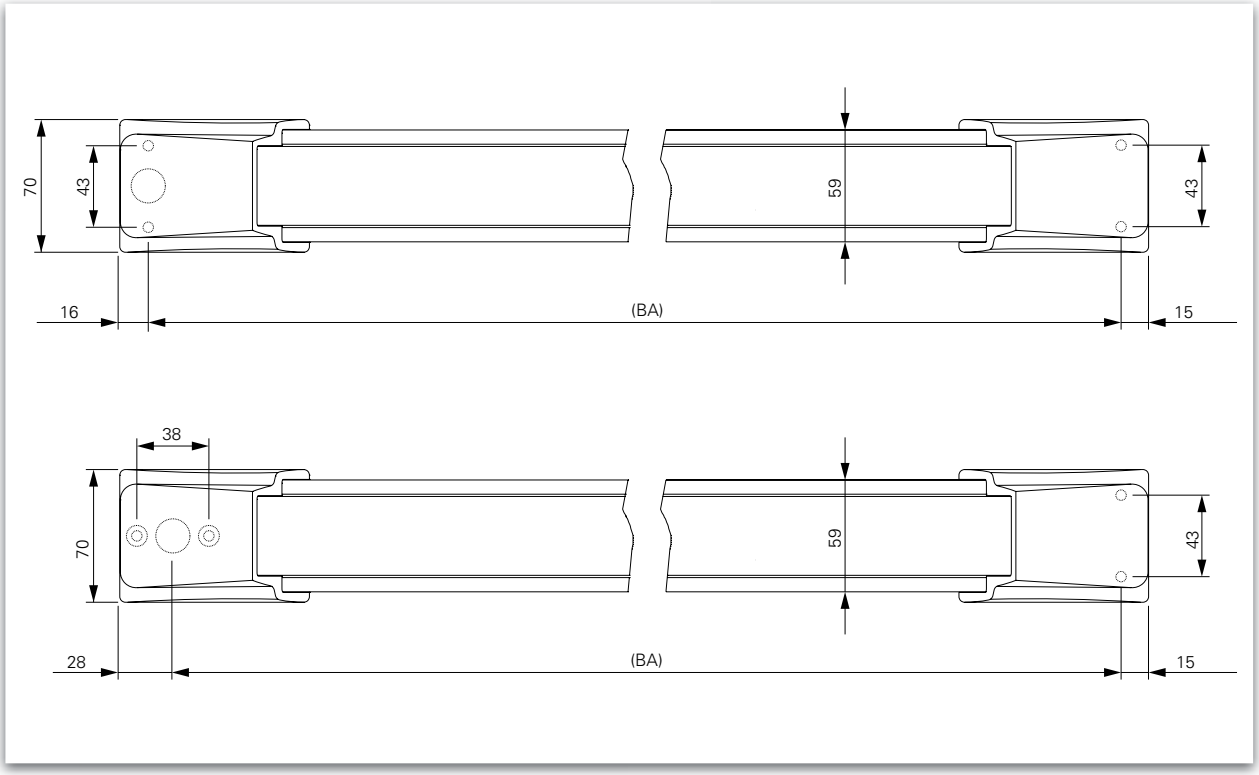

Dimensioning: A: Screw-on version / B: Screw through version

Description

- Tested according to **DIN EN 1125**, **EN 1634**, **DIN 4102 part 18**
- Can be used according to **EN 1125** only in combination with tested lock and door hardware
- Suitable for the use on fire- and smoke control doors according testing
- Screw-on or screw through version
- DIN left / DIN right useable
- Finishes:
  Stainless steel
  Aluminium F1 coated

*Manufacturing of special lengths on request and against surcharge possible.

Installation situation

EPN 2000

EPN 2000 for profile frame doors / screw-on version for active and passive leaf

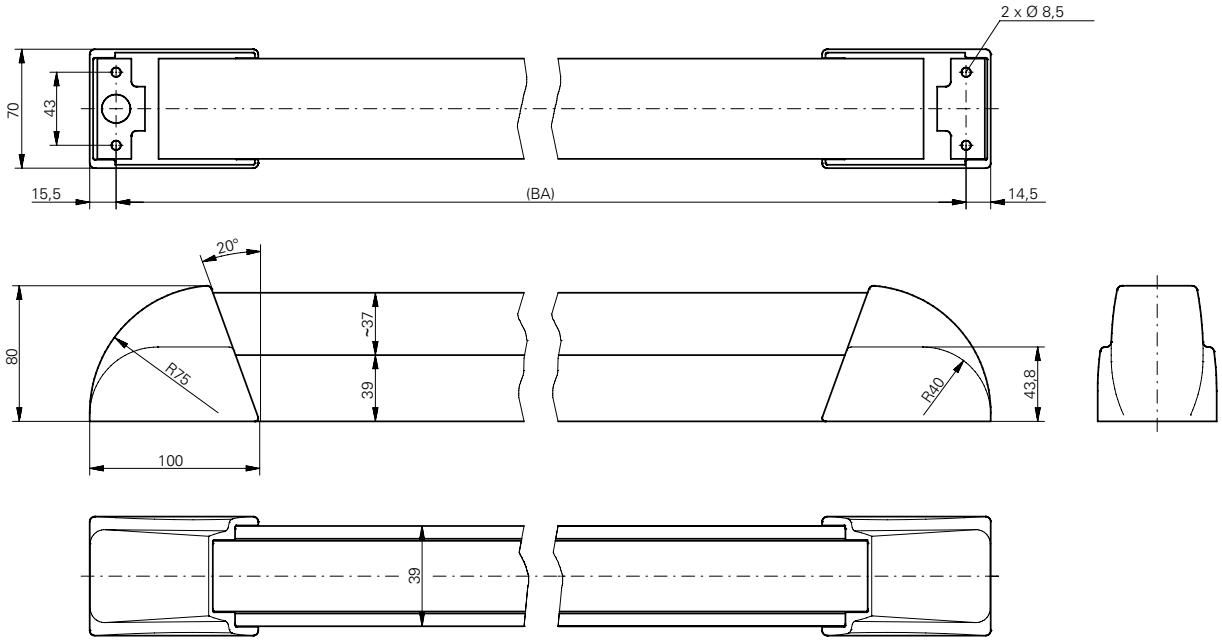

EPN 2000 for wooden and steel doors / screw-through version for passive leaf

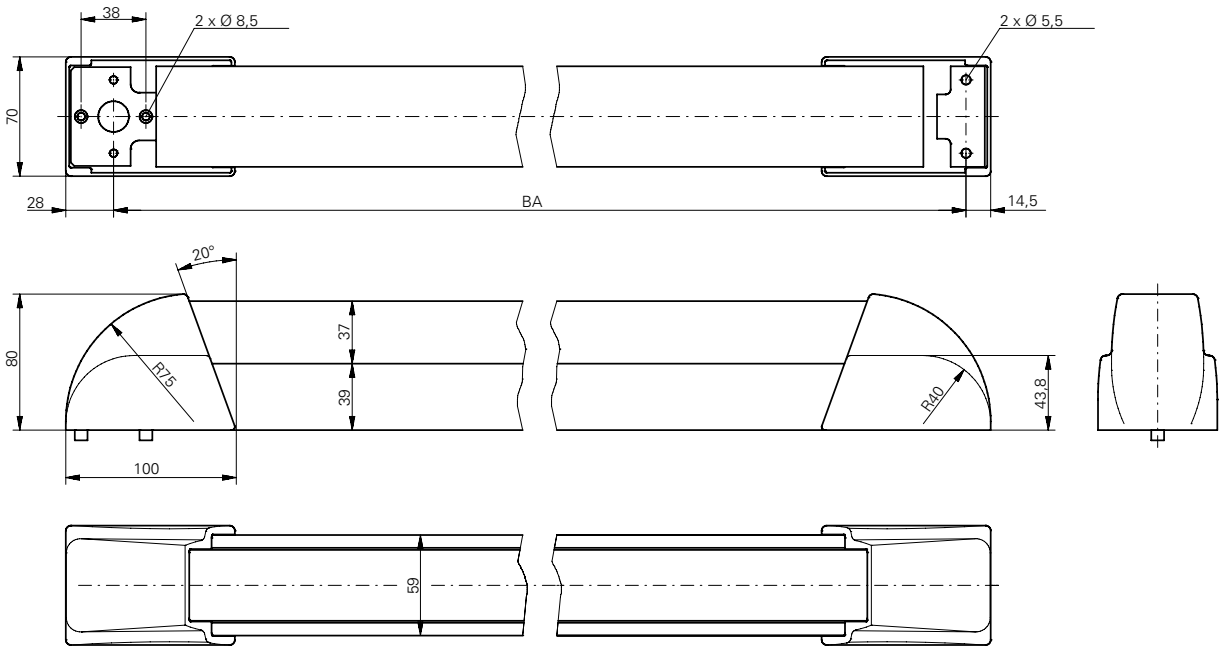

Swissdoor ApS • Stenhuggervej 2 • 5471 Søndersø • Danmark Telefon +45 86 28 00 00 • mail@swissdoor.dk • www.swissdoor.dk

Installation situation

EPN 2000

EPN 2000 for wooden and steel doors / screw-through version for passive leaf

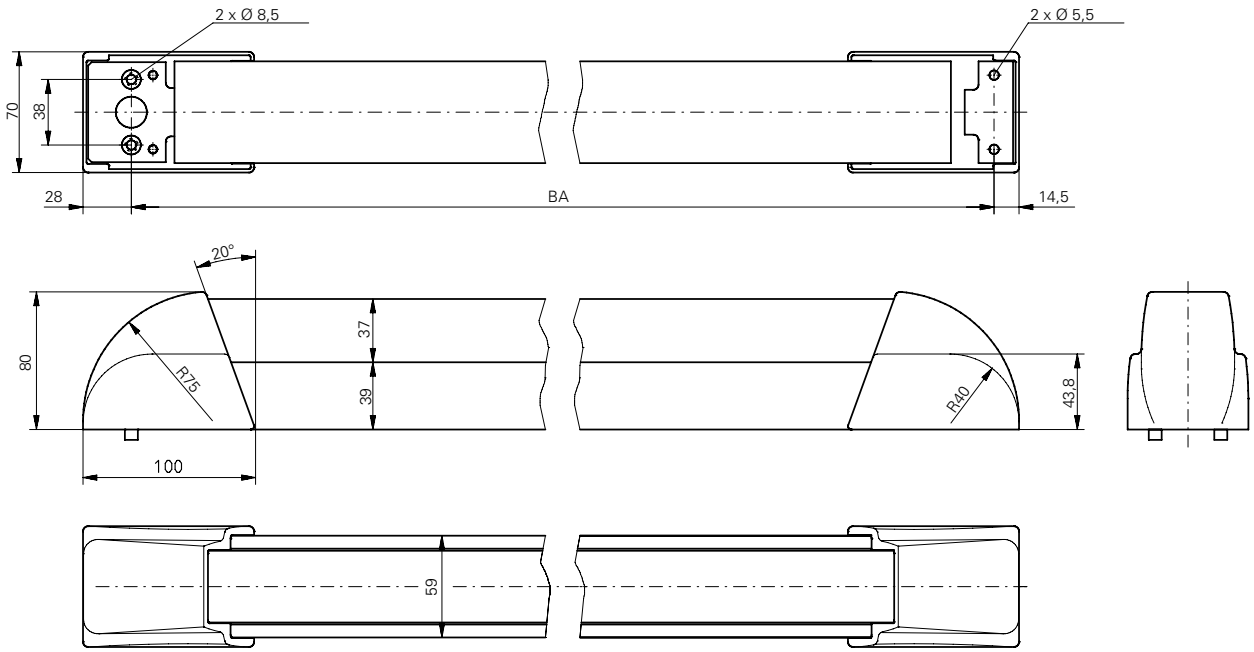

EPN 2000 ■ Touchbar

EPN 2000 Stainless steel	Fixing axis (BA)	Article number
Screw-on version	1.000 mm	106702024600080
	1.250 mm	106702044600080

EPN 2000 Stainless steel	Fixing axis (BA)	Leaf	Article number
Screw- through version	1.000 mm	Active leaf	106702024600090
		Passive leaf	106703024600090
	1.250 mm	Active leaf	106702044600090
		Passive leaf	106703044600090

EPN 2000
Stainless steel

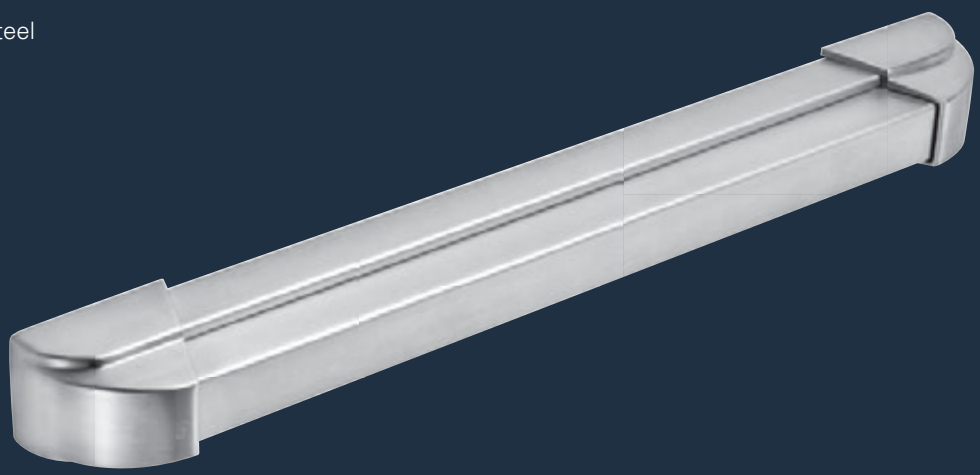

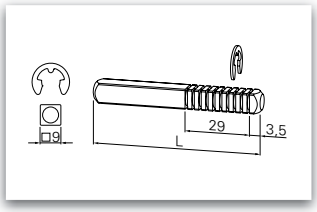

	Length	Article number
Spindle for passive leaf Illustration see page 514	55 mm	119007944300030
	75 mm	119007954300030
	95 mm	119007964300030

Manufacturing of special lengths on request and against surcharge possible.

Swissdoor ApS • Stenhuggervej 2 • 5471 Søndersø • Danmark Telefon +45 86 28 00 00 • mail@swissdoor.dk • www.swissdoor.dk

EPN 2000 ■ Touchbar

Al

F

EN 1125

EPN 2000 F1	Fixing axis (BA)	Article number
Screw-on version	1.000 mm	106702023000080
	1.250 mm	106702043000080

EPN 2000 F1	Fixing axis (BA)	Leaf	Article number
Screw- through version	1.000 mm	Active leaf	106702023000090
		Passive leaf	106702043000090
	1.250 mm	Active leaf	106703023000090
		Passive leaf	106703043000090

EPN 2000
Aluminium F1

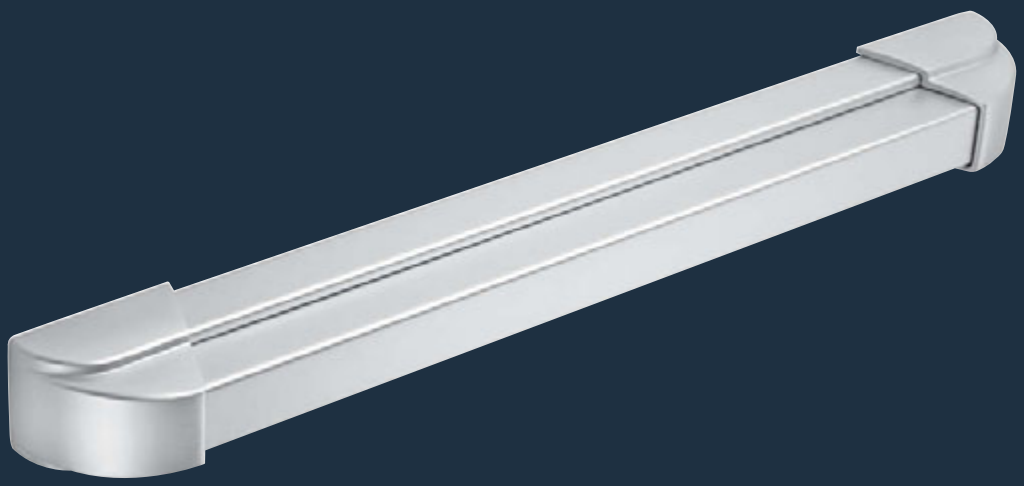

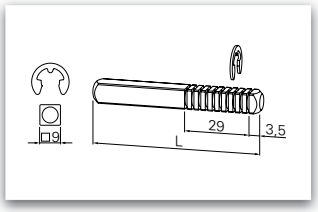

	Length	Article number
Spindle for passive leaf Illustration see page 514	55 mm	119007944300030
	75 mm	119007954300030
	95 mm	119007964300030

SWISSDOOR
DØRTEKNIK FOR PROFESSIONELLE

ECO EPN 2000 II

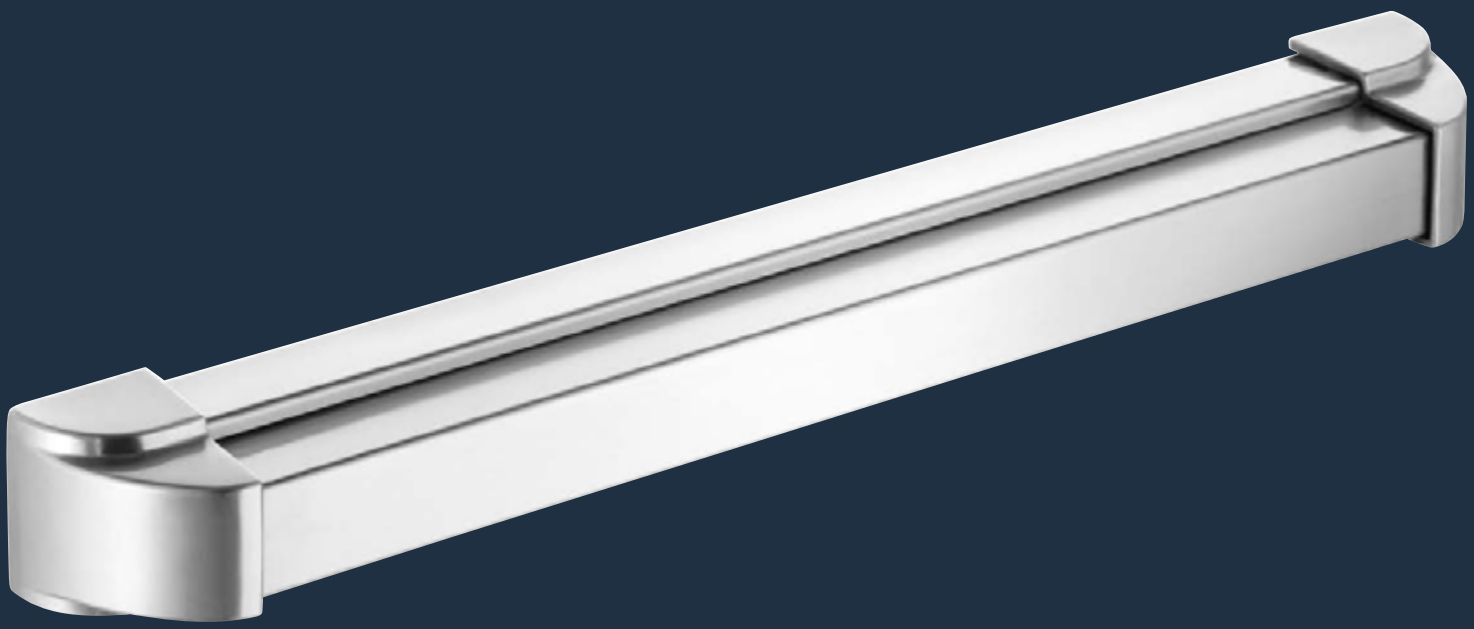

reddot design award
winner 2010

Designpreis
Deutschland
2011
NOMINEE

Swissdoor ApS • Stenhuggervej 2 • 5471 Søndersø • Danmark Telefon +45 86 28 00 00 • mail@swissdoor.dk • www.swissdoor.dk

EPN 2000 II ■ Touchbar

Product characteristics		
Mode of operation	Touchbar Pushbar	■ -
Finishes	Stainless steel Aluminium F1 Nylon coated	■ ■ ◘
Fixing axis	1.000 mm* 1.250 mm*	■ ■
DIN left / DIN right useable		■
For fire- and smoke control doors	F	■
Tested acc. EN / DIN	EN 1125	■

■ Yes - No ◘ Further colors on request

EPN 2000 II

A

B

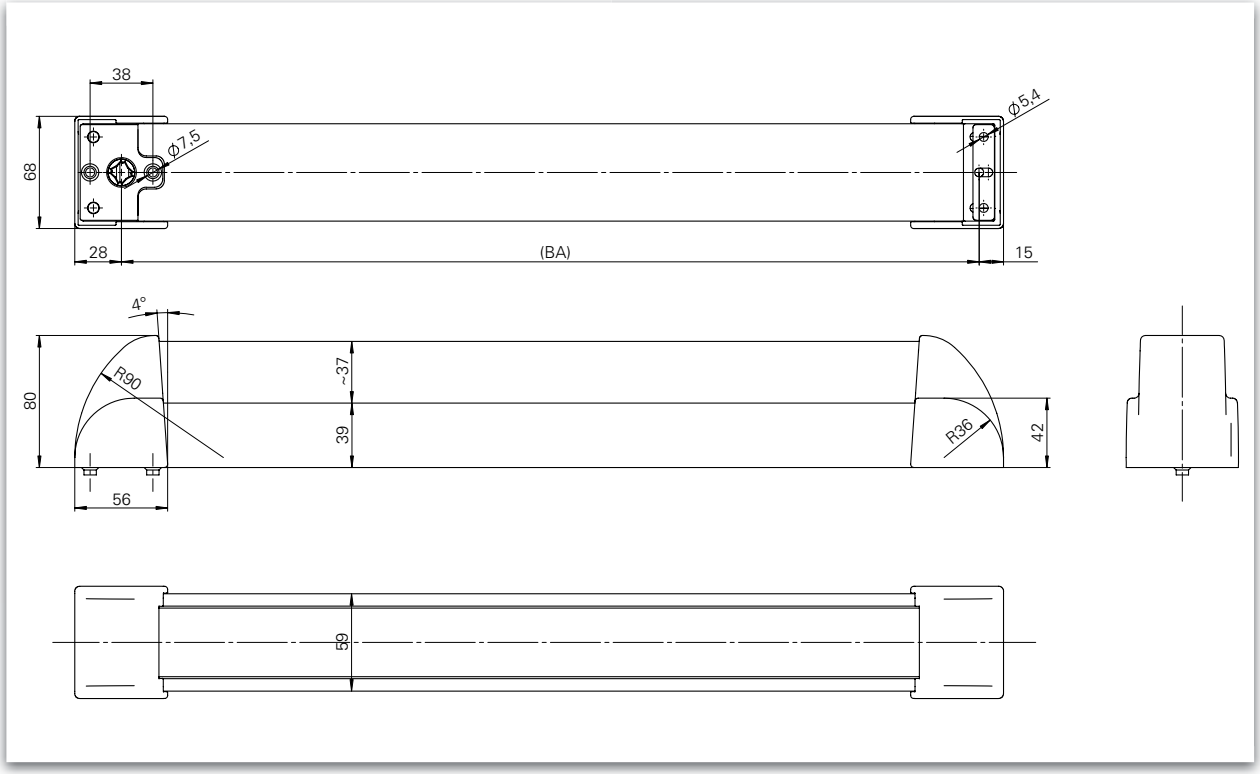

EPN 2000 II

Dimensioning: A: Screw-on version / B: Screw through version

Description

- Tested according to DIN **EN 1125**, **EN 1634**, **DIN 4102 Part 18**
- Can be used according to **EN 1125** only in combination with tested lock and door hardware
- Suitable for the use on fire- and smoke control doors according testing
- Screw-on version
- DIN left / DIN right useable
- Finishes:
  Stainless steel
  Aluminium F1 coated

*Manufacturing of special lengths on request and against surcharge possible.

Installation situation

EPN 2000 II

EPN 2000 II for profile frame doors / Screw-on version for active and passive leaf

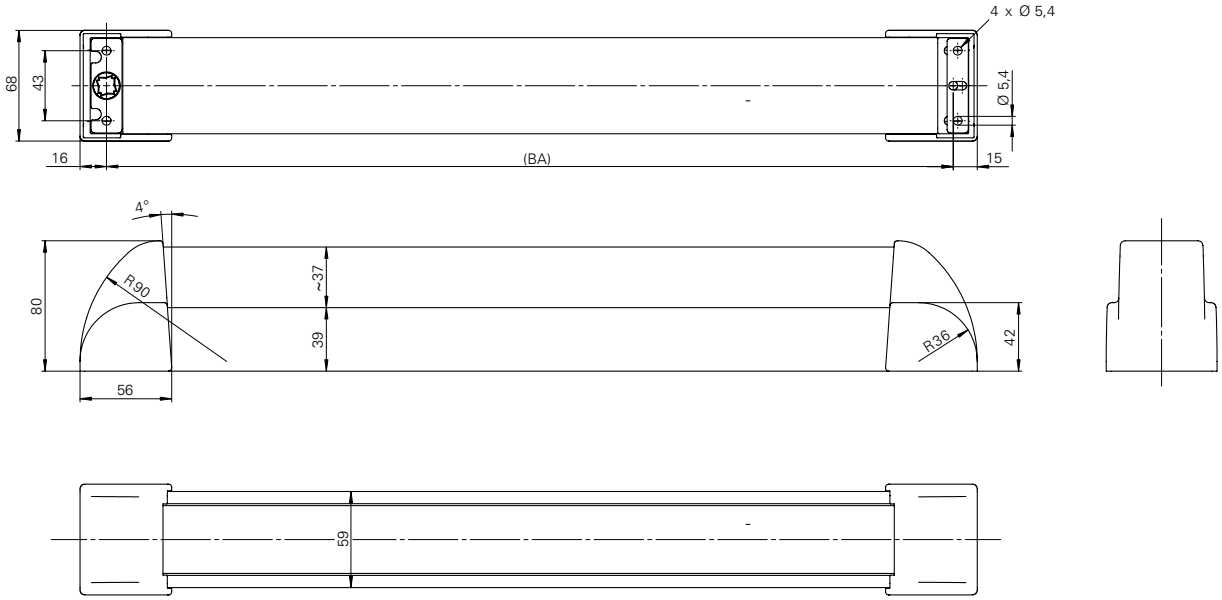

EPN 2000 II for wooden and steel doors / Screw-through version for passive leaf

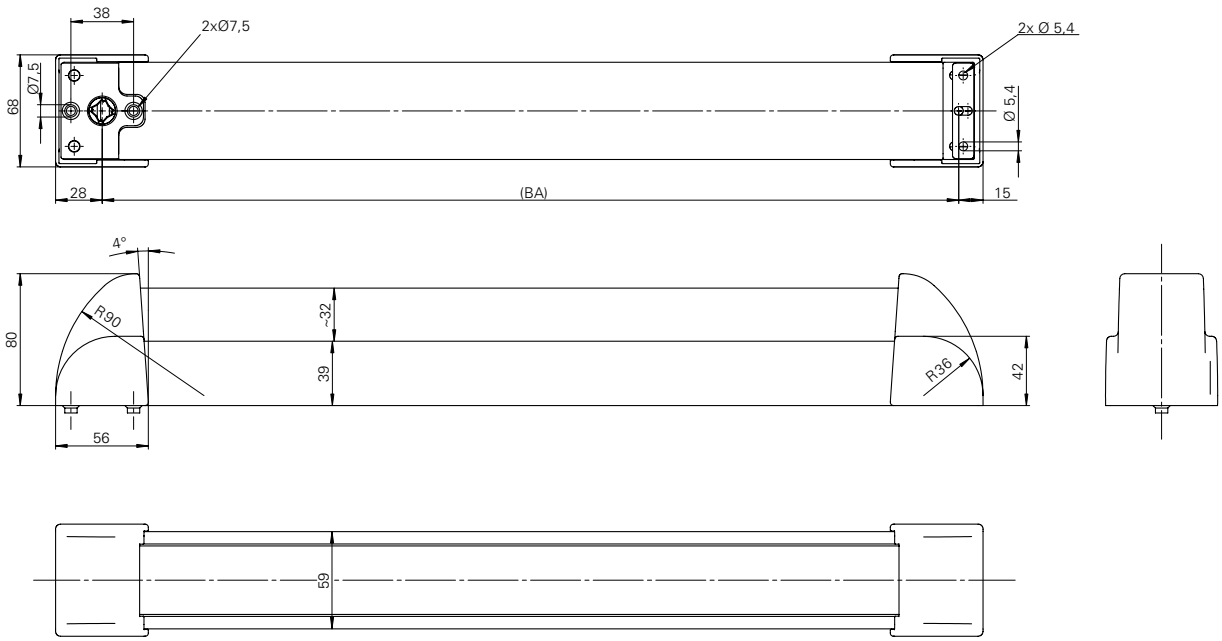

Swissdoor ApS • Stenhuggervej 2 • 5471 Søndersø • Danmark Telefon +45 86 28 00 00 • mail@swissdoor.dk • www.swissdoor.dk

Installation situation

EPN 2000 II

EPN 2000 for wooden and steel doors / screw-through version for passive leaf

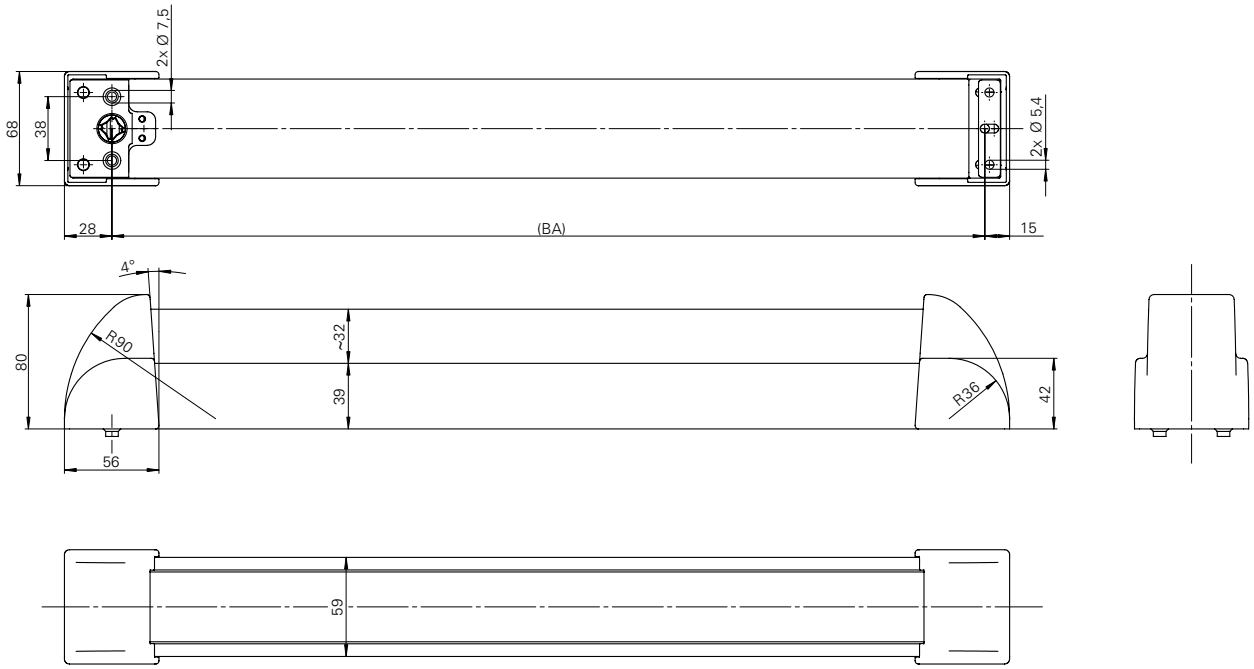

EPN 2000 II ■ Touchbar

ER

F

EN 1125

reddot design award
winner 2010

EPN 2000 II Stainless steel	Fixing axis (BA)	Article number
Screw-on version	1.000 mm	106706024600080
	1.250 mm	106706044600080

EPN 2000 II Stainless steel	Fixing axis (BA)	Leaf	Article number
Screw- through version	1.000 mm	Active leaf	106706024600090
		Passive leaf	106707024600090
	1.250 mm	Active leaf	106706044600090
		Passive leaf	106707044600090

Designpreis Deutschland 2011
NOMINEE

EPN 2000 II
Stainless steel

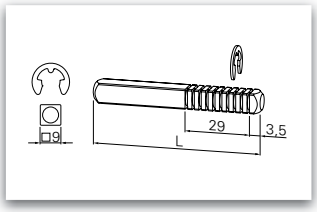

	Length	Article number
Spindle for passive leaf Illustration see page 514	55 mm	119007944300030
	75 mm	119007954300030
	95 mm	119007964300030

*Manufacturing of special lengths on request and against surcharge possible.

Swissdoor ApS • Stenhuggervej 2 • 5471 Søndersø • Danmark Telefon +45 86 28 00 00 • mail@swissdoor.dk • www.swissdoor.dk

EPN 2000 II ■ Touchbar

ECO

Al

F

EN 1125

reddot design award
winner 2010

EPN 2000 II F1	Fixing axis (BA)	Article number
Screw-on version	1.000 mm	106706044000080
	1.250 mm	106706043000080

EPN 2000 II F1	Fixing axis (BA)	Leaf	Article number
Screw- through version	1.000 mm	Active leaf	106706023000090
		Passive leaf	106707023000090
	1.250 mm	Active leaf	106706043000090
		Passive leaf	106707024000090

Designpreis Deutschland 2011
NOMINEE

EPN 2000 II
Aluminium F1

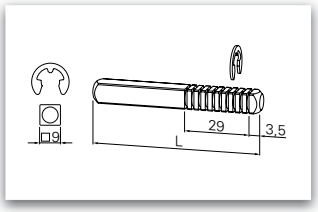

	Length	Article number
Spindle for passive leaf Illustration see page 514	55 mm	119007944300030
	75 mm	119007954300030
	95 mm	119007964300030

SWiSSDOOR
DØRTEKNIK FOR PROFESSIONELLE

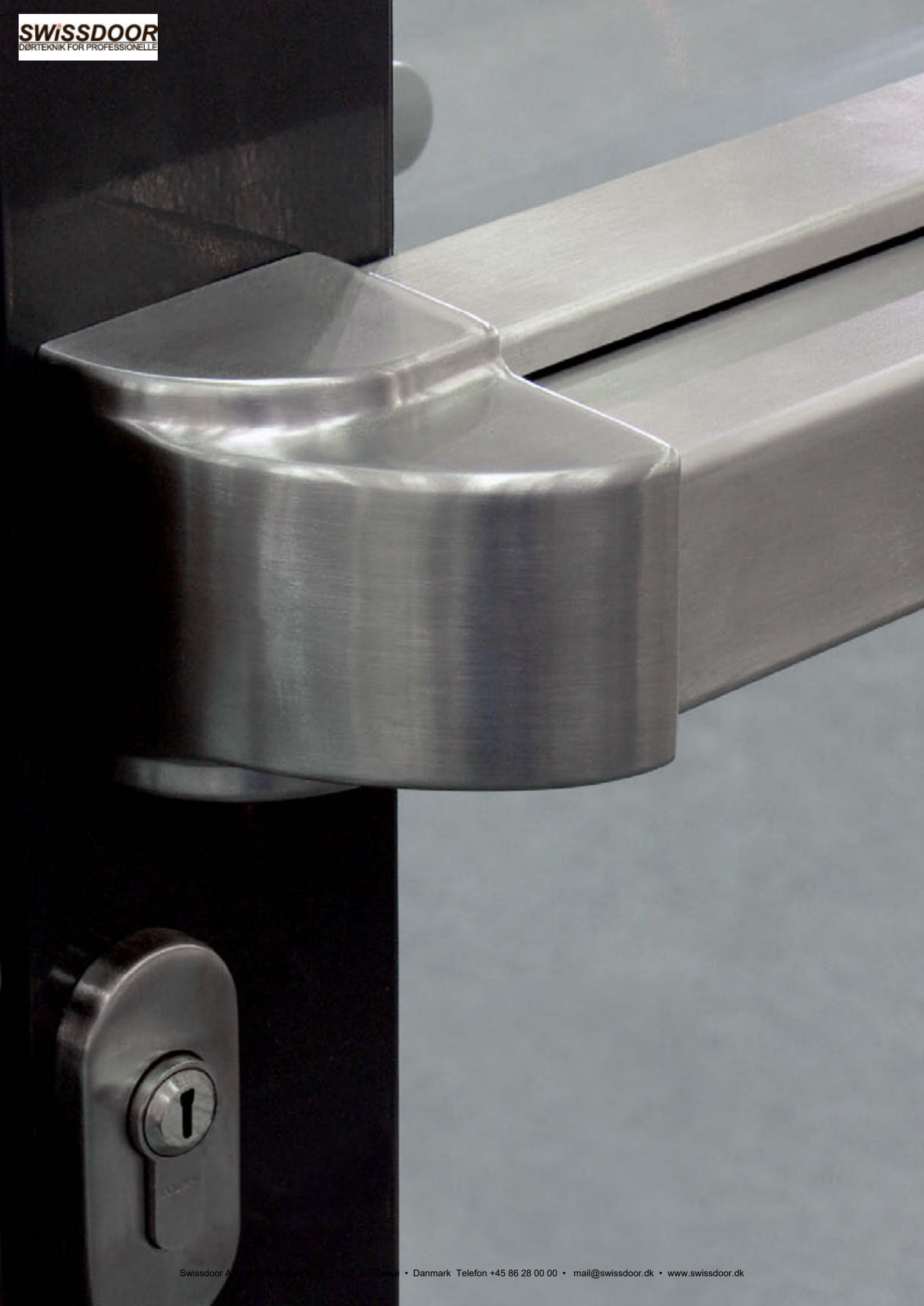

Swissdoor A/S • Stenhuggervej 2 • 5471 Søndersø • Danmark Telefon +45 86 28 00 00 • mail@swissdoor.dk • www.swissdoor.dk

ECO **EPN 900 II**

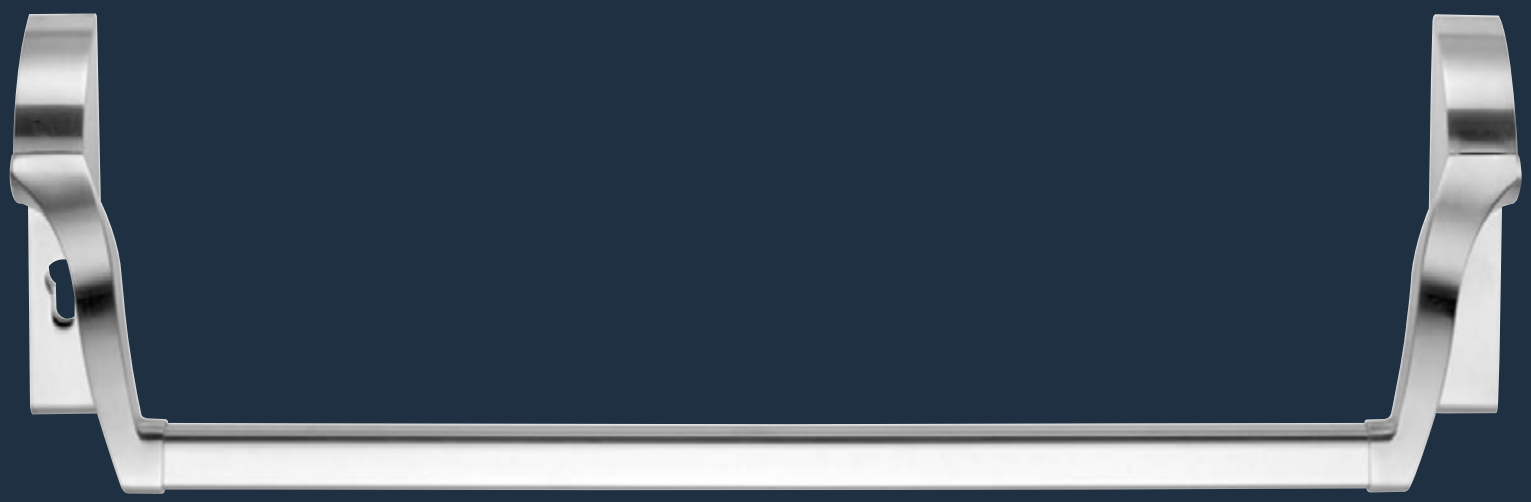

Swissdoor ApS • Stenhuggervej 2 • 5471 Søndersø • Danmark Telefon +45 86 28 00 00 • mail@swissdoor.dk • www.swissdoor.dk

EPN 900 II ■ Pushbar

Product characteristics		
Mode of operation	Touchbar	-
	Pushbar	■
Finishes	Stainless steel	■
	Aluminium F1	■
	Nylon red / black	■
Tube	900*	■
	1.150*	■
	1.500*	◘
Lock type	PZ-72	■
	PZ-92	■
	RZ-74	■
	RZ-94	■
	UG blind	■
DIN left / DIN right useable		■
Suitable for the use on fire- and smoke control doors	F	■
Tested acc. EN / DIN	EN 1125	■

■ Yes - No ◘ Option

EPN 900 II

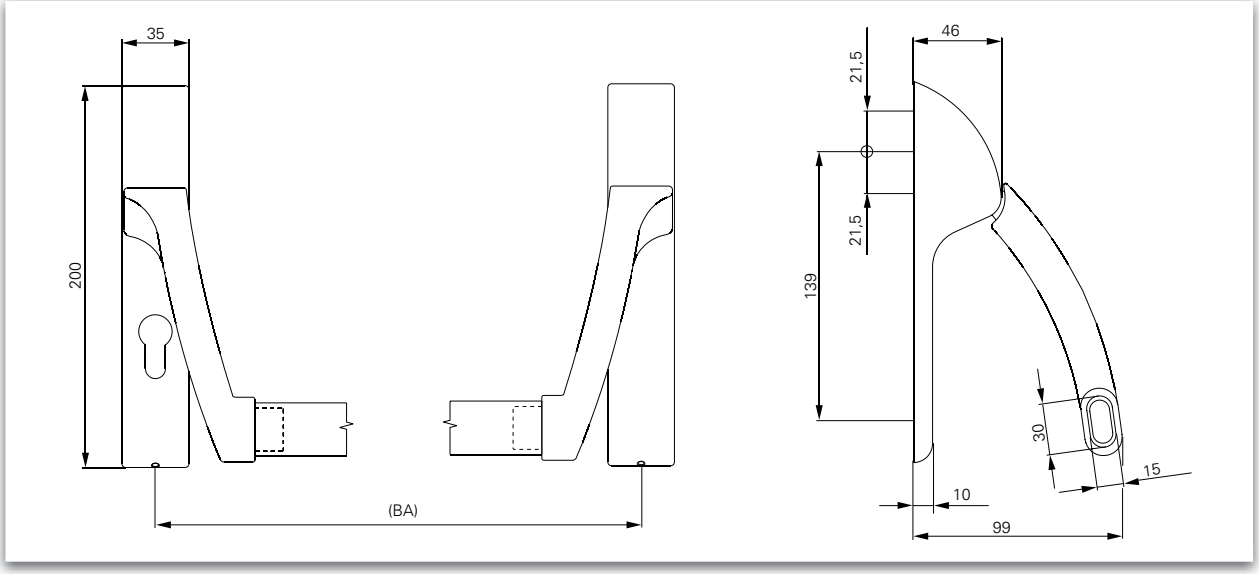

Dimensioning: EPN 900 II

Description

- Tested according to **EN 1125**, **EN 1634**, **DIN 4102 Part 18**
- Can be used according to **EN 1125** only in combination with tested lock and door hardware
- Suitable for the use on fire- and smoke control doors according testing
- DIN left / DIN right useable

*Tube has to be ordered seperately

Finishes:

- Stainless steel

Aluminium:

- Steel zinc-plated and silver (F1) coated
- Gear unit: steel zinc-plated
- Tube: steel zinc-plated, silver (F1) coated
- Cover cap: nylon, silver (F1) coated
- Arms: nylon, silver (F1) coated, with integrated steel core

Nylon:

- Gear unit: steel zinc-plated
- Tube: steel zinc-plated, red lacquered
- Cover: nylon black satin
- Arms: nylon black satin with integrated steel core

EPN 900 II ■ Pushbar

ER

F

EN 1125

EPN 900 II Stainless steel*	Turning angle	Article number
PZ-72	30°	106951304600080
	40°	106951404600080
	45°	106951454600080
PZ-92	30°	106952304600080
	40°	106952404600080
	45°	106952454600080
RZ-74	30°	106955304600080
	40°	106955404600080
	45°	106955454600080
RZ-94	30°	106956304600080
	40°	106956404600080
	45°	106956454600080
UG blind	30°	106954304600080
	40°	106954404600080
	45°	106954454600080

Tube ER*	Fixing axis (BA) max.	Article number
900 mm	995 mm	106909004600070
1.150 mm	1.245 mm	106909014600070
1.500 mm	1.595 mm	106909074600070

EPN 900 II
Stainless steel

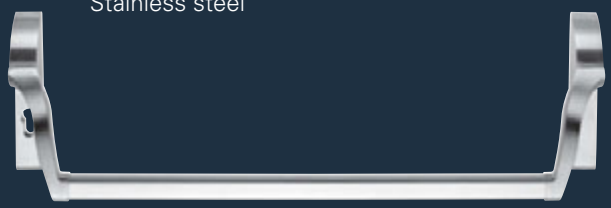

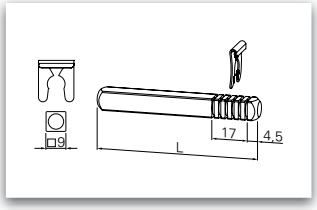

	Length	Article number
Spindle for passive leaf Illustration see page 514	55 mm	119007914300030
	75 mm	119007924300030
	95 mm	119007934300030

*Tube has to be ordered seperately

Swissdoor ApS • Stenhuggervej 2 • 5471 Søndersø • Danmark Telefon +45 86 28 00 00 • mail@swissdoor.dk • www.swissdoor.dk

EPN 900 II ■ Pushbar

Al

F

EN 1125

Ku

F

EN 1125

EPN 900 II F1*	Turning angle	Article number
PZ-72	30°	106951303000080
	40°	106951403000080
	45°	106951453000080
PZ-92	30°	106952303000080
	40°	106952403000080
	45°	106952453000080
RZ-74	30°	106955303000080
	40°	106955403000080
	45°	106955453000080
RZ-94	30°	106956303000080
	40°	106956403000080
	45°	106956453000080
UG blind	30°	106954303000080
	40°	106954403000080
	45°	106954453000080

EPN 900 II Ku*	Turning angle	Article number
PZ-72	30°	106951300200080
	40°	106951400200080
	45°	106951450200080
PZ-92	30°	106952300200080
	40°	106952400200080
	45°	106952450200080
RZ-74	30°	106955300200080
	40°	106955400200080
	45°	106955450200080
RZ-94	30°	106956300200080
	40°	106956400200080
	45°	106956450200080
UG blind	30°	106954300200080
	40°	106954400200080
	45°	106954450200080

Tube F1*	Fixing axis (BA) max.	Article number
900 mm	995 mm	106909003000070
1.150 mm	1.245 mm	106909013000070
1.500 mm	1.595 mm	106909073000070

Tube Ku* red lacquered	Fixing axis (BA) max.	Article number
900 mm	995 mm	106909000100070
1.150 mm	1.245 mm	106909010100070
1.500 mm	1.595 mm	on request

4

EPN 900 II
Aluminium F1 coated

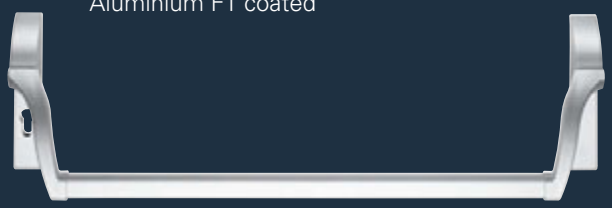

EPN 900 II
Nylon black / red

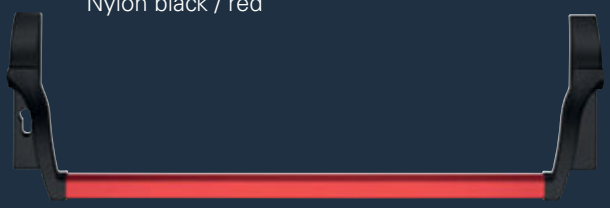

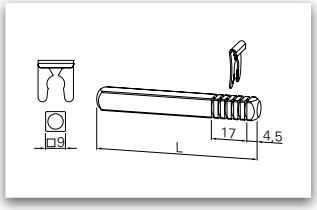

	Length	Article number
Spindle for passive leaf Illustration see page 514	55 mm	119007914300030
	75 mm	119007924300030
	95 mm	119007934300030

*Tube has to be ordered seperately

ECO EPN 900 III

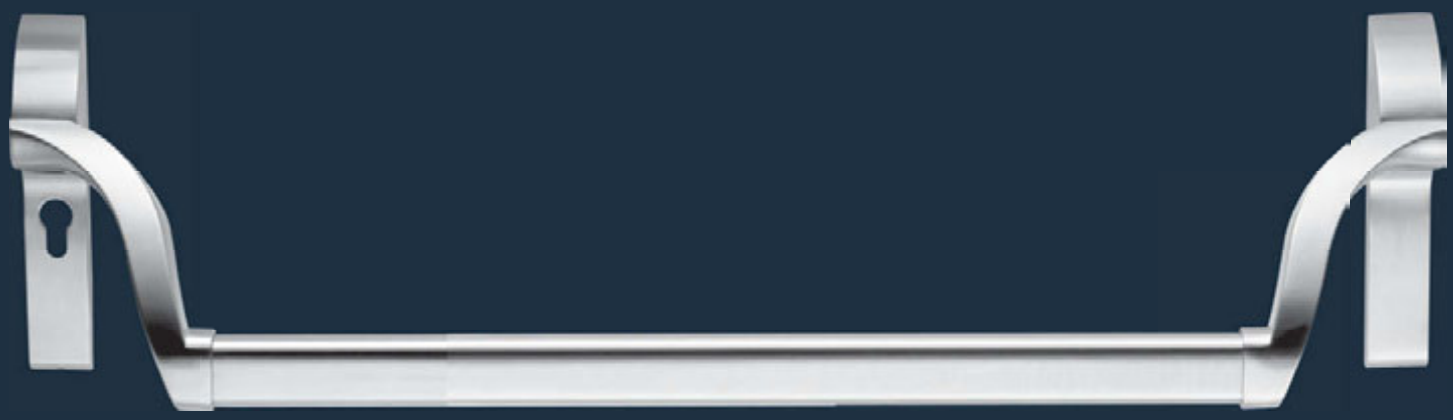

Swissdoor ApS • Stenhuggervej 2 • 5471 Søndersø • Danmark Telefon +45 86 28 00 00 • mail@swissdoor.dk • www.swissdoor.dk

Product characteristics		
Mode of operation	Touchbar	-
	Pushbar	■
Finishes	Stainless steel	■
	Aluminium F1	■
	Coloured coated	■
Tube	900*	■
	1.150*	■
	1.500*	◘
Lock type	PZ-72	■
	PZ-92	■
	RZ-74	■
	RZ-94	■
	UG / Blind	■
DIN left / DIN right useable		■
Suitable for the use on fire- and smoke control doors	F	■
Tested acc. EN / DIN	EN 1125	■

■ Yes - No ◘ Option

EPN 900 III

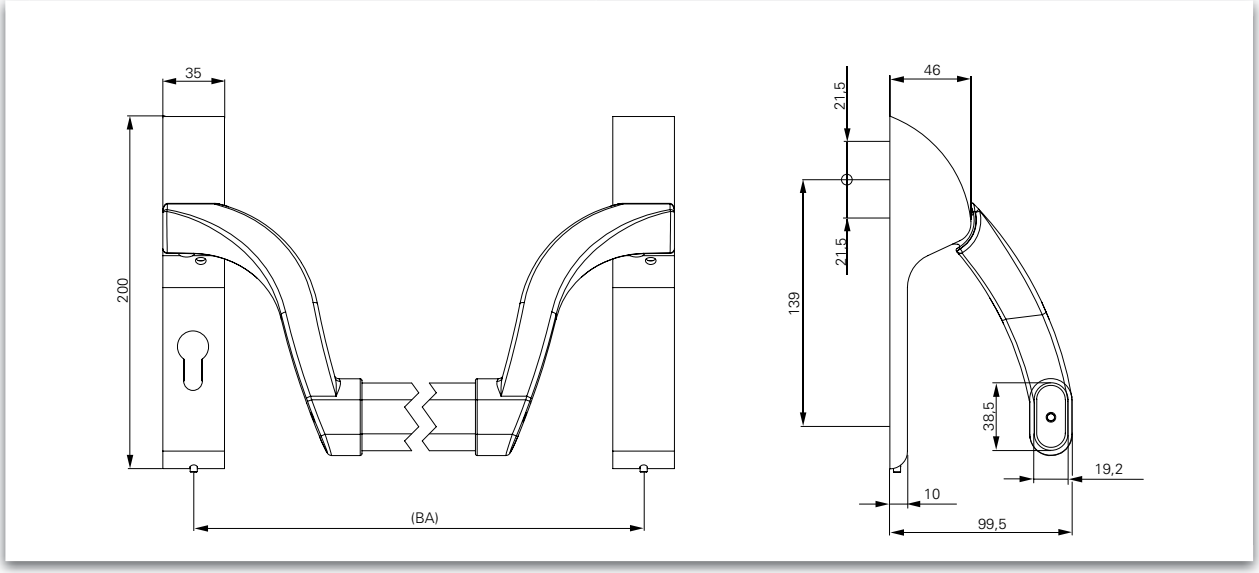

Dimensioning: EPN 900 III

Description

EPN 900 III / Pushbar

The arms are highly cranked and enable the use of electronic key cylinders.

- Tested according to **EN 1125**, **EN 1634**, **DIN 4102 Part 18**
- Can be used according to **EN 1125** only in combination with tested lock and door hardware
- Suitable for the use on fire- and smoke control doors according testing
- DIN left / DIN right useable
- Arms highly cranked, suitable in particular for electronic key cylinders and short PZ distances.
- Huge, stable tube (vandalism)
- High-strength screwing of arm and tube
- Finishes:
  - Satin Stainless steel
  - Silver (F1) coated **(on basis of EPN 900 III Stainless steel)**
  - Steel zinc-plated and silver (F1) coated
  - Red / black coated **(on basis EPN 900 III Stainless steel)**
- Gear unit: steel zinc-plated

*Tube has to be ordered seperately

EPN 900 III ■ Pushbar

ER

F

EN 1125

EPN 900 III Stainless steel *	Turning angle	Article number
PZ-72	30°	106961304600080
	40°	106961404600080
	45°	106961454600080
PZ-92	30°	106962304600080
	40°	106962404600080
	45°	106962454600080
RZ-74	30°	106965304600080
	40°	106965404600080
	45°	106965454600080
RZ-94	30°	106966304600080
	40°	106966404600080
	45°	106966454600080
UG blind	30°	106964304600080
	40°	106964404600080
	45°	106964454600080

Tube ER	Fixing axis (BA) max.	Article number
900 mm	1.067 mm	109506604600070
1.150 mm	1.317 mm	109506614600070
1.500 mm	1.667 mm	109506644600070

EPN 900 III
Stainless steel

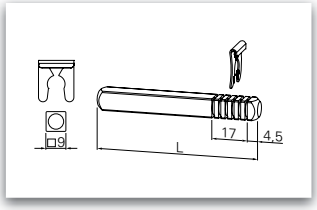

	Length	Article number
Spindle for passive leaf Illustration see page 514	55 mm	119007914300030
	75 mm	119007924300030
	95 mm	119007934300030

*Tube has to be ordered seperately

Swissdoor ApS • Stenhuggervej 2 • 5471 Søndersø • Danmark Telefon +45 86 28 00 00 • mail@swissdoor.dk • www.swissdoor.dk

EPN 900 III ■ Pushbar

Al

F

EN 1125

Ku

EN 1125

EPN 900 III F1 *	Turning angle	Article number
PZ-72	30°	106961303000080
	40°	106961403000080
	45°	106961453000080
PZ-92	30°	106962303000080
	40°	106962403000080
	45°	106962453000080
RZ-74	30°	106965303000080
	40°	106965403000080
	45°	106965453000080
RZ-94	30°	106966303000080
	40°	106966403000080
	45°	106966453000080
UG blind	30°	106964303000080
	40°	106964403000080
	45°	106964453000080

EPN 900 III * coul.	Turning angle	Article number
PZ-72	30°	106961300200080
	40°	106961400200080
	45°	106961450200080
PZ-92	30°	106962300200080
	40°	106962400200080
	45°	106962450200080
RZ-74	30°	106965300200080
	40°	106965400200080
	45°	106965450200080
RZ-94	30°	106966300200080
	40°	106966400200080
	45°	106966450200080
UG blind	30°	106964300200080
	40°	106964400200080
	45°	106964450200080

Tube F1	Fixing axis (BA) max.	Article number
900 mm	995 mm	109506603000070
1.150 mm	1.245 mm	109506613000070
1.500 mm	1.667 mm	109506643000070

Tube Ku red lacquered	Fixing axis (BA) max.	Article number
900 mm	995 mm	109506600100070
1.150 mm	1.245 mm	109506610100070
1.500 mm	1.667 mm	on request

4

EPN 900 III
Aluminium F1 coated

EPN 900 III
coul. coated

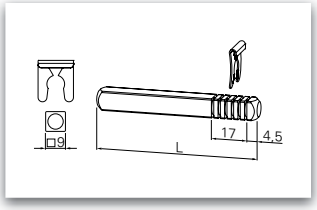

	Length	Article number
Spindle for passive leaf Illustration see page 514	55 mm	119007914300030
	75 mm	119007924300030
	95 mm	119007934300030

*Tube has to be ordered seperately

Airport Dusseldorf
Germany

SWiSSDOOR
DØRTEKNIK FOR PROFESSIONELLE

ECO **Panic locking devices**
If panic breaks out

Panic bolting technology ensures that people can get out of a danger zone at any time, even in a panic situation. One push on the horizontal activation element is all it takes and the door springs open - irrespective of whether it was locked or not.

ECO unlocking solutions also open up the escape route when a crowd of people press against the door. And even the strength of a child is sufficient to open the door to escape from a fire or toxic smoke.

Swissdoor ApS • Stenhuggervej 2 • 5471 Søndersø • Danmark Telefon +45 86 28 00 00 • mail@swissdoor.dk • www.swissdoor.dk

SWISSDOOR
DØRTEKNIK FOR PROFESSIONELLE

ECO

ECO lock technology and panic combinations

■ SYSTEM TECHNOLOGY FOR THE DOOR

Swissdoor ApS • Stenhuggervej 2 • 5471 Søndersø • Danmark Telefon +45 86 28 00 00 • mail@swissdoor.dk • www.swissdoor.dk

GBS 12 ▪ Mortise Lock

Product characteristics		
Lock type	PZ-72 W (W = handle / knob execution)	■
	BB-72 (Insert)**	◘
	WC-78	■
	RZ-74	◘
Backset	55	■
	60	■
	65	■
Face plate	Stainless steel	■
Face plate width	18	-
	20	■
	24	■
Hub	8 mm*	■
	9 mm	◘

■ Yes - No ◘ On request *Special spring hub

Description

- With closed lock case with 3-fold fastening. Lock case zinc-plated
- For interior doors
- Manufactured acc. to **DIN 18251**, class 3
- Dead bolt, nickel-plated, double-turn, Version WC single-turn
- Hub with spring hub in wear-resistance sliding bearing
- Latch bolt nickel-plated with silencing elements
- Special version: Triple latch bolt nickel-plated on request
- Face plate square on request

On request individual plate stamping possible at extra charge.

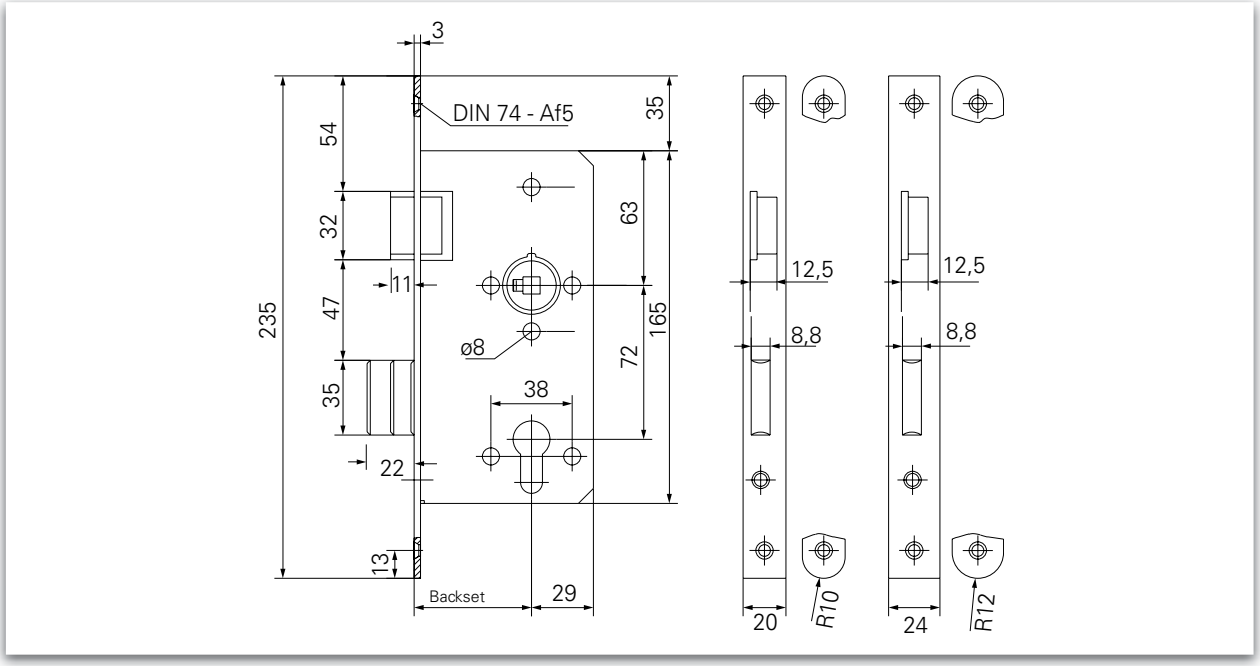

Dimensioning: GBS 12

Swissdoor ApS • Stenhuggervej 2 • 5471 Søndersø • Danmark Telefon +45 86 28 00 00 • mail@swissdoor.dk • www.swissdoor.dk

GBS 12 ▪ Mortise Lock

PZ-72W (W = handle / knob execution)	Face plate	Backset		Article number
Rebated door Face plate: 20 x 235 mm	round	55	L	2012A1AL29BDF13
			R	2012A1AL29BDF14
		60	L	2012A1AM29BDF13
			R	2012A1AM29BDF14
		65	L	2012A1AN29BDF13
			R	2012A1AN29BDF14
Unrebated door Face plate: 24 x 235 mm	round	55	L	2012A1AL29aDF13
			R	2012A1AL29aDF14
		60	L	2012A1AM29aDF13
			R	2012A1AM29aDF14
		65	L	2012A1AN29aDF13
			R	2012A1AN29aDF14
	square	55	L	2012A1AL29dDF13
			R	2012A1AL29dDF14
		60	L	2012A1AM29dDF13
			R	2012A1AM29dDF14
		65	L	2012A1AN29dDF13
			R	2012A1AN29dDF14

WC-78	Face plate	Backset		Article number
Rebated door Face plate: 20 x 235 mm	round	55	L	2012A1EL29BDF11
			R	2012A1EL29BDF12
		60	L	2012A1EM29BDF11
			R	2012A1EM29BDF12
		65	L	2012A1EN29BDF11
			R	2012A1EN29BDF12
Unrebated door Face plate: 24 x 235 mm	round	55	L	2012A1EL29aDF11
			R	2012A1EL29aDF12
		60	L	2012A1EM29aDF11
			R	2012A1EM29aDF12
		65	L	2012A1EN29aDF11
			R	2012A1EN29aDF12

**Please order the BB-insert seperately. You can find the BB-insert on page 343.

GBS 15 ■ Mortise Lock

Product characteristics		
Lock type	PZ-72 W (W = handle / knob execution)	■
	BB-72 (Insert)**	◘
	WC-78	■
	RZ-74	◘
Backset	55	■
	60	■
	65	■
Face plate	Stainless steel	■
Face plate width	18	-
	20	■
	24	■
Hub	8 mm* 9 mm	■ ◘
Special version	Triple latch bolt nickel-plated	◘

■ Yes - No ◘ On request *Special spring hub

Description

- With closed lock case with 3-fold fastening. Lock case zinc-plated
- For doors with high frequency
- Manufactured acc. to **DIN 18251**, class 4
- Dead bolt, nickel-plated, double-turn,
- Latch bolt nickel-plated with silencing elements
- Hub with spring hub in wear-resistance sliding bearing.
- With oil channel
- Special version: Triple latch bolt nickel-plated on request
- Face plate square on request

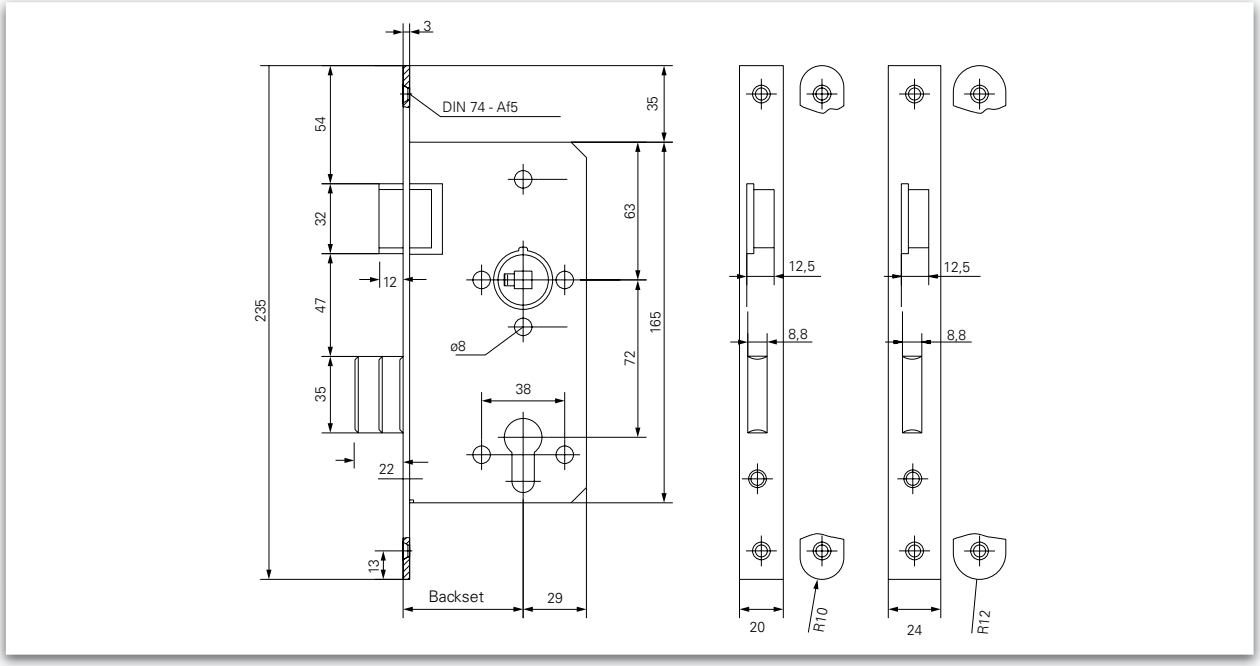

Dimensioning: GBS 15

Swissdoor ApS • Stenhuggervej 2 • 5471 Søndersø • Danmark Telefon +45 86 28 00 00 • mail@swissdoor.dk • www.swissdoor.dk

GBS 15 ■ Mortise Lock

PZ-72W (W = handle / knob execution)	Face plate	Backset		Article number
Rebated door Face plate: 20 x 235 mm	round	55	L	2015A1AL29BDH13
			R	2015A1AL29BDH14
		60	L	2015A1AM29BDH13
			R	2015A1AM29BDH14
		65	L	2015A1AN29BDH13
			R	2015A1AN29BDH14
Unrebated door Face plate: 24 x 235 mm	round	55	L	2015A1AL29aDH13
			R	2015A1AL29aDH14
		60	L	2015A1AM29aDH13
			R	2015A1AM29aDH14
		65	L	2015A1AN29aDH13
			R	2015A1AN29aDH14

WC-78	Face plate	Backset		Article number
Rebated door Face plate: 20 x 235 mm	round	55	L	2015A1EL29BDH11
			R	2015A1EL29BDH12
		60	L	2015A1EM29BDH11
			R	2015A1EM29BDH12
		65	L	2015A1EN29BDH11
			R	2015A1EN29BDH12
Unrebated door Face plate: 24 x 235 mm	round	55	L	2015A1EL29aDH11
			R	2015A1EL29aDH12
		60	L	2015A1EM29aDH11
			R	2015A1EM29aDH12
		65	L	2015A1EN29aDH11
			R	2015A1EN29aDH12

**Please order the BB-insert seperately. You can find the BB-insert on page 343.

GBS 31 ■ Mortise Lock

Product characteristics		
Lock type	PZ-72 W (W = handle / knob execution)	■
	BB-72	■
	WC-78	■
	RZ-74	■
Backset	45**	■
	50	■
	55	■
	60	■
	65	■
	70**	■
	80	◘
Face plate	Stainless steel	■
	Polished brass	◘
Face plate width	16	-
	18	-
	20	◘
	24	■
Hub	8 mm*	■
	9 mm	◘
Special version	Triple latch bolt nickel-plated	◘
	Anti thrust latch bolt	◘
	Protection bushes	◘
	Oil channel	◘
DIN left / DIN right useable		■

■ Yes - No ◘ On request *Special spring hub

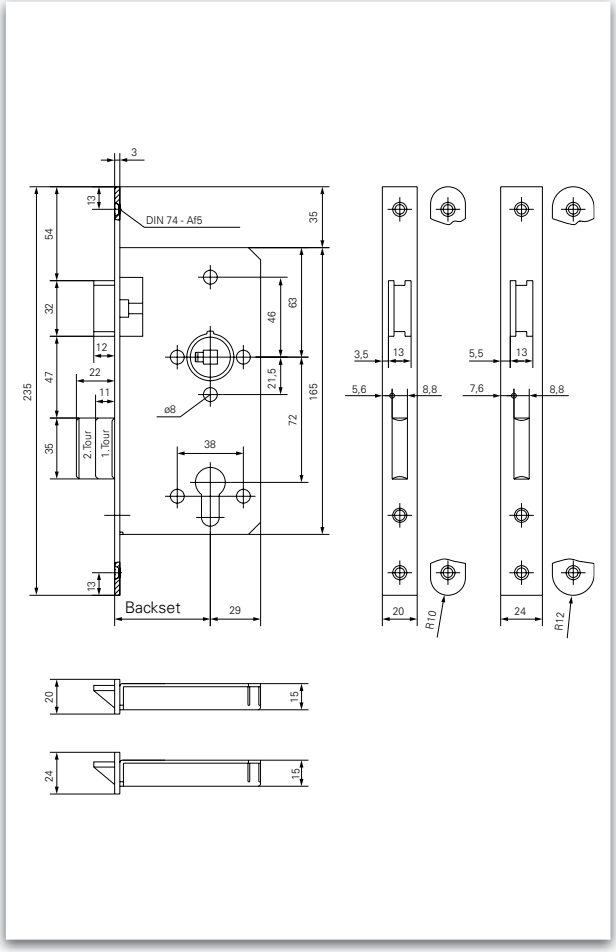

Dimensioning: GBS 31

Description

- With closed lock case with 3-fold fastening. Lock case zinc-plated
- For doors with high frequency
- Manufactured acc. to **DIN 18251**, class 3
- Tested according **DIN EN 12 209**
- Dead bolt, nickel-plated, double-turn
- Nickel-plated and shiftable latch bolt. Latch bolt can be shifted without opening the lock case. With silencing elements
- Hub with spring hub in wear-resistance sliding bearing.
- Fire-proof version on request

On request individual plate stamping possible at extra charge.

**Minimum order quantity: 100 pieces.

Swissdoor ApS • Stenhuggervej 2 • 5471 Søndersø • Danmark Telefon +45 86 28 00 00 • mail@swissdoor.dk • www.swissdoor.dk

GBS 31 ■ Mortise Lock

PZ-72W (W = handle / knob execution)	Face plate	Backset		Article number
Unrebated door Face plate: 24 x 235 mm	round	45		2231A1045000003
		50		2231A1050000008
		55		2231A1055000006
		60		2231A1060000009
		65		2231A1065000000
		70		2231A1070000004
	square	45		2231A1045000002
		50		2231A1050000002
		55		2231A1055000003
		60		2231A1060000008
		65		2231A1065000002
		70		2231A1070000003

BB-72	Face plate	Backset		Article number
Unrebated door Face plate: 24 x 235 mm	round	45		2231A3045000002
		50		2231A3050000003
		55		2231A3055000000
		60		2231A3060000000
		65		2231A3065000000
		70		2231A3070000000
	square	45		2231A3045000003
		50		2231A3050000004
		55		2231A3055000001
		60		2231A3060000001
		65		2231A3065000001
		70		2231A3070000001

WC-78	Face plate	Backset		Article number
Unrebated door Face plate: 24 x 235 mm	round	45		2231A2045000002
		50		2231A2050000002
		55		2231A2055000002
		60		2231A2060000008
		65		2231A2065000000
		70		2231A2070000000
	square	45		2231A2045000003
		50		2231A2050000003
		55		2231A2055000003
		60		2231A2060000009
		65		2231A2065000001
		70		2231A2070000001

RZ-74W (W = handle / knob execution)	Face plate	Backset		Article number
Unrebated door Face plate: 24 x 235 mm	round	45		2231A4045000000
		50		2231A4050000000
		55		2231A4055000000
		60		2231A4060000000
		65		2231A4065000000
		70		2231A4070000001
	square	45		2231A4045000001
		50		2231A4050000001
		55		2231A4055000001
		60		2231A4060000001
		65		2231A4065000001
		70		2231A4070000002

GBS 31 C ■ Latch bolt lock

Product characteristics		
Backset	45**	■
	50	■
	55	■
	60	■
	65	■
	70**	■
	80	◘
Face plate	Stainless steel	■
Face plate width	16	-
	18	-
	20	◘
	24	■
Hub	8 mm* 9 mm	■ ◘
Special version	Triple latch bolt nickel-plated	◘
	Anti thrust latch bolt	◘
	Protection bushes	◘
	Oil channel	◘
DIN left / DIN right useable		■

■ Yes - No ◘ On request *Special spring hub

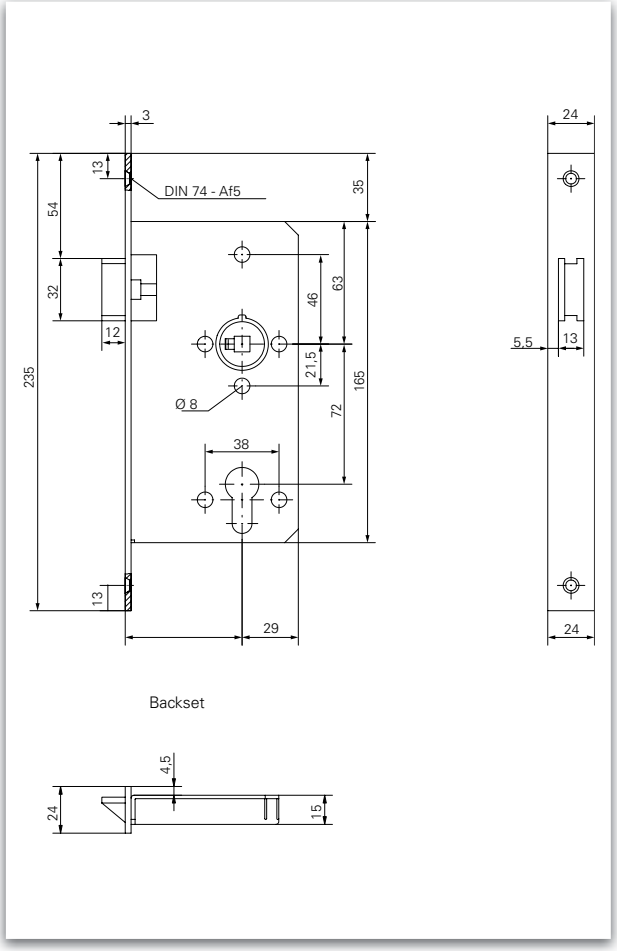

Dimensioning: GBS 31 C

Description

- With closed lock case with 3-fold fastening. Lock case zinc-plated
- For doors with high frequency
- Manufactured acc. to **DIN 18251**, class 3
- Tested according **DIN EN 12 209**
- Nickel-plated and shiftable latch bolt. Latch bolt can be shifted without opening the lock case. With silencing elements
- Hub with spring hub in wear-resistance sliding bearing.
- Fire-proof version on request

On request individual plate stamping possible at extra charge.

**Minimum order quantity: 100 pieces.

Swissdoor ApS • Stenhuggervej 2 • 5471 Søndersø • Danmark Telefon +45 86 28 00 00 • mail@swissdoor.dk • www.swissdoor.dk

GBS 31 C ■ Latch bolt lock

PZ-72 W (W = handle / knob execution)	Face plate	Backset		Article number
Unrebated door Face plate: 24 x 235 mm	round	45		2231E1045000000
		50		2231E1050000000
		55		2231E1055000002
		60		2231E1060000002
		65		2231E1065000000
		70		2231E1070000000
	square	45		2231E1045000001
		50		2231E1050000001
		55		2231E1055000003
		60		2231E1060000003
		65		2231E1065000001
		70		2231E1070000001

GBS 31 E ■ Dead bolt

Product characteristics		
Lock type	PZ W (W = handle / knob execution)	■
Backset	45**	■
	50	■
	55	■
	60	■
	65	■
	70**	■
	80	◘
Face plate	Stainless steel	■
Face plate width	16	-
	18	-
	20	◘
	24	■
Special version	Protection bushes	◘
	Oil channel	◘
DIN left / DIN right useable		■

■ Yes - No ◘ On request *Special spring hub

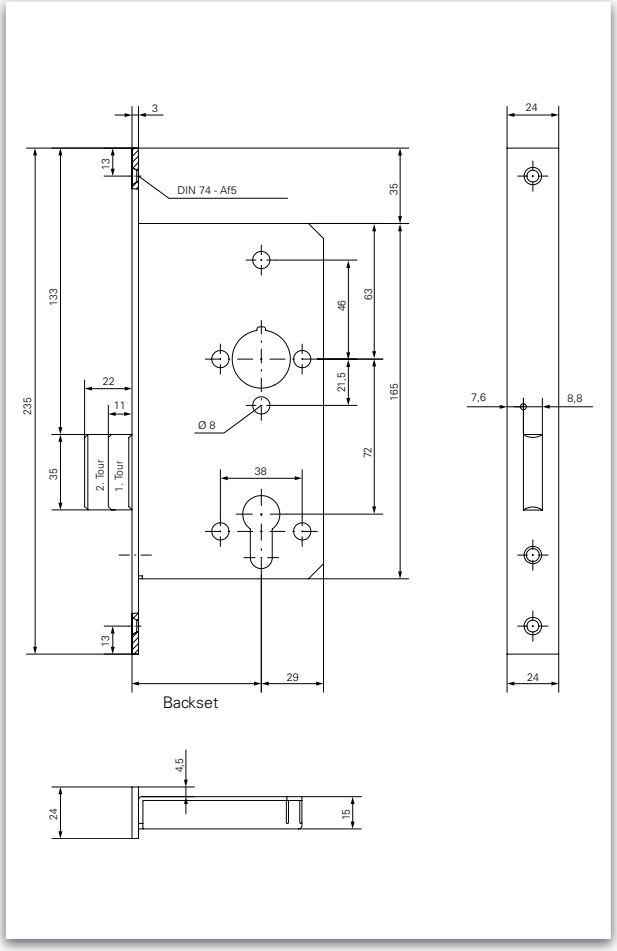

Dimensioning: GBS 31 E

Description

- With closed lock case with 3-fold fastening. Lock case zinc-plated
- For doors with high frequency
- Manufactured acc. to **DIN 18251**, class 3
- Tested according **DIN EN 12 209**
- Dead bolt, nickel-plated, double-turn
- Fire-proof version on request

On request individual plate stamping possible at extra charge.

**Minimum order quantity: 100 pieces.

Swissdoor ApS • Stenhuggervej 2 • 5471 Søndersø • Danmark Telefon +45 86 28 00 00 • mail@swissdoor.dk • www.swissdoor.dk

GBS 31 E ■ Dead bolt

PZ-72 W (W = handle / knob execution)	Face plate	Backset	Article number
Unrebated door Face plate: 24 x 235 mm	round	45	2231E1045000000
		50	2231E1050000000
		55	2231E1055000002
		60	2231E1060000002
		65	2231E1065000000
		70	2231E1070000000
	square	45	2231E1045000001
		50	2231E1050000001
		55	2231E1055000003
		60	2231E1060000003
		65	2231E1065000001
		70	2231E1070000001

GBS 36 ■ Mortise Lock

Product characteristics		
Lock type	PZ-78 W (W = handle / knob execution)	◘
	RZ-78 W (W = handle / knob execution)	■
Backset	60	■
	70	■
	80	◘
Face plate	Steel zinc-plated	■
Face plate width	18	■
Face plate height	1.787 mm	■
	2.210 mm	◘
Hub	8 mm*	■
	9 mm	◘

■ Yes - No ◘ On request *Special spring hub

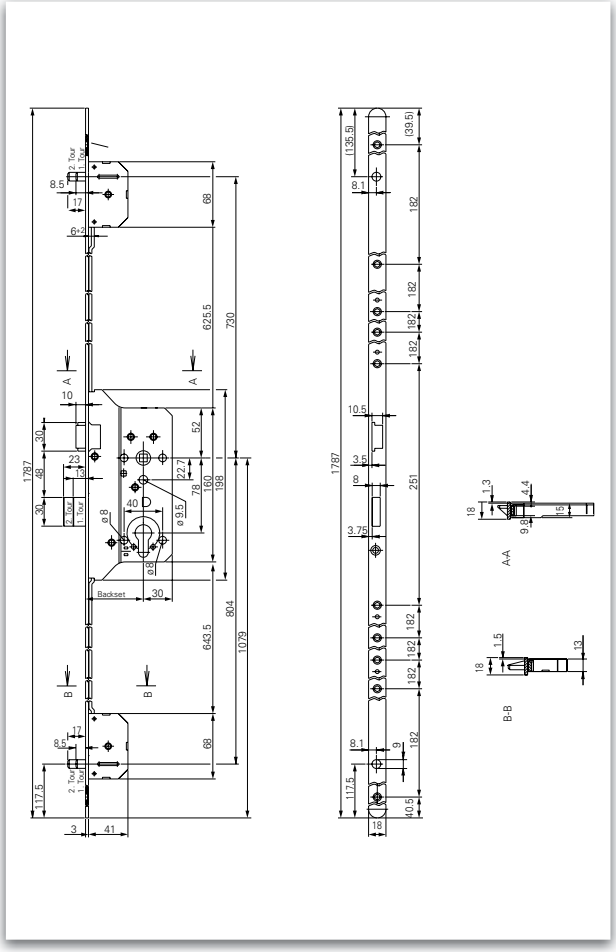

Dimensioning: GBS 36

Description

- Security multipoint locking (Swiss dimensions) with 4-fold interlock with closed, zinc-plated lock case
- For interior doors
- Technical requirements acc. **DIN 18251-1**, class 4
- Dead bolt hardened, double turn
- Steel lath bolt
- With latch blocking and free-running handle
- zinc-plated lock case

On request individual plate stamping possible at extra charge.

Swissdoor ApS • Stenhuggervej 2 • 5471 Søndersø • Danmark Telefon +45 86 28 00 00 • mail@swissdoor.dk • www.swissdoor.dk

GBS 36 ■ Mortise Lock

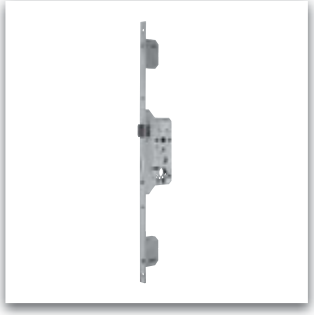

RZ-78 W (W = handle / knob execution)	Face plate	Backset	Hub	DIN	Article number
Rebated door Face plate: 18 x 1.787 mm	round	60	8	L	2136AaDM2ACJ063
				R	2136AaDM2ACJ064
		70		L	2136AaDP2ACJ063
				R	2136AaDP2ACJ064
		60	9	L	2136AaDM4ACJ063
				R	2136AaDM4ACJ064
		70		L	2136AaDP4ACJ063
				R	2136AaDP4ACJ064

GBS 38 ■ Mortise Lock

Product characteristics		
Lock type	PZ-78 W (W = handle / knob execution)	■
	BB-78	■
	WC-78	■
	RZ-78 (W = handle / knob execution)	■
Backset	60	■
	70	■
	80	◘
Face plate	Stainless steel	■
Face plate width	18	■
Hub	8 mm*	■
	9 mm	◘
Special version	Triple latch bolt	◘

■ Yes - No ◘ On request *Special spring hub

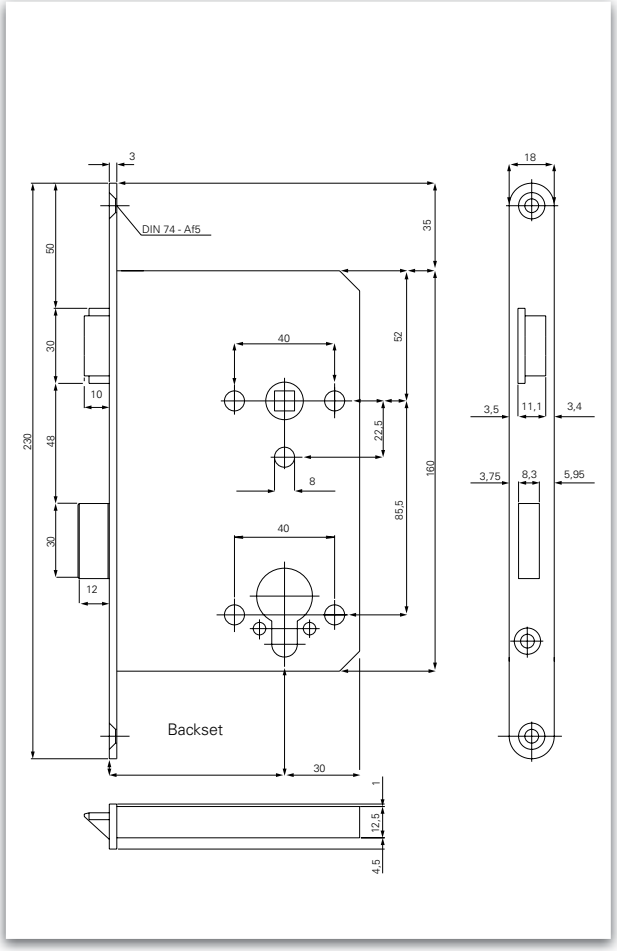

Dimensioning: GBS 38

Description

- Mortise lock (Swiss dimensions)
- For doors with high frequency
- Dead bolt zinc-plated, single-turn
- Latch bolt with steel delrin
- Zinc-plated lock case

On request individual plate stamping possible at extra charge.

Swissdoor ApS • Stenhuggervej 2 • 5471 Søndersø • Danmark Telefon +45 86 28 00 00 • mail@swissdoor.dk • www.swissdoor.dk

GBS 38 ■ Mortise Lock

ECO

RZ-78 W (W = handle / knob execution)	Hub	Face plate	Backset		Article number
Rebated door Face plate: 18 x 230 mm	8	round	60	L	2138AbDM2ATRF33
				R	2138AbDM2ATRF34
			70	L	2138AbDP2ATRF33
				R	2138AbDP2ATRF34
	9		60	L	2138AbDM4ATRF33
				R	2138AbDM4ATRF34
			70	L	2138AbDP4ATRF33
				R	2138AbDP4ATRF34

PZ-78 W (W = handle / knob execution)	Hub	Face plate	Backset		Article number
Rebated door Face plate: 18 x 230 mm	8	round	60	L	2138AbgM2ATRF33
				R	2138AbgM2ATRF34
			70	L	2138AbgP2ATRF33
				R	2138AbgP2ATRF34
	9		60	L	2138AbgM4ATRF33
				R	2138AbgM4ATRF34
			70	L	2138AbgP4ATRF33
				R	2138AbgP4ATRF34

BB-78	Hub	Face plate	Backset		Article number
Rebated door Face plate: 18 x 230 mm	8	round	60	L	2138AbhM2sTRF31
				R	2138AbhM2sTRF32
			70	L	2138AbhP2ATRF31
				R	2138AbhP2ATRF32
	9		60	L	2138AbhM4ATRF31
				R	2138AbhM4ATRF32
			70	L	2138AbhP4ATRF31
				R	2138AbhP4ATRF32

WC-78	Hub	Face plate	Backset		Article number
Rebated door Face plate: 18 x 230 mm	8	round	60	L	2138AbkM2ATRF31
				R	2138AbkM2ATRF32
			70	L	2138AbkP2ATRF31
				R	2138AbkP2ATRF32
	9		60	L	2138AbkM4ATRF31
				R	2138AbkM4ATRF32
			70	L	2138AbkP4ATRF31
				R	2138AbkP4ATRF32

GBS 39 ■ Mortise Lock

Product characteristics		
Lock type	PZ-78 W (W = handle / knob execution)	■
	BB-78	■
	WC-78	■
	RZ-78 (W = handle / knob execution)	■
Backset	60	■
Face plate	Stainless steel	■
Face plate width	18	■
Hub	8 mm*	■
	9 mm	◘

■ Yes - No ◘ On request *Special spring hub

Description

- Mortise lock (Swiss dimensions)
- Dead bolt zinc-plated, single-turn
- Latch bolt with steel delrin
- Zinc-plated lock case

On request individual plate stamping possible at extra charge.

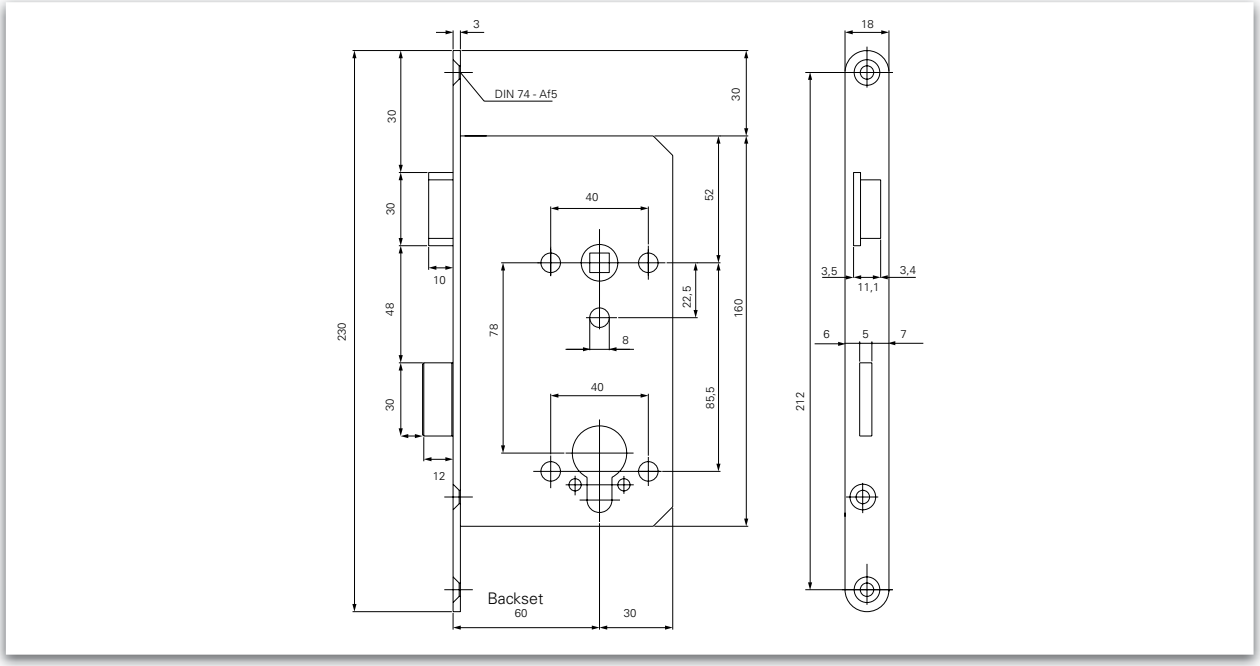

Dimensioning: GBS 39

Swissdoor ApS • Stenhuggervej 2 • 5471 Søndersø • Danmark Telefon +45 86 28 00 00 • mail@swissdoor.dk • www.swissdoor.dk

GBS 39 ■ Mortise Lock

ECO

RZ-78 W (W = handle / knob execution)	Hub	Face plate	Backset		Article number
Rebated door Face plate: 18 x 230 mm	8	round	60	L	2039aig01u30107
				R	2039aig01u30207

PZ-78 W (W = handle / knob execution)	Hub	Face plate	Backset		Article number
Rebated door Face plate: 18 x 230 mm	8	round	60	L	2039aih01u30107
				R	2039aih01u30207

BB-78	Hub	Face plate	Backset		Article number
Rebated door Face plate: 18 x 230 mm	8	round	60	L	2039aic01u30107
				R	2039aic01u30207

WC-78	Hub	Face plate	Backset		Article number
Rebated door Face plate: 18 x 230 mm	8	round	60	L	2039aif01u30107
				R	2039aif01u30207

GBS 60 ■ Mortise lock for profile frame doors

Product characteristics		
Lock type	PZ-92 W (W = handle / knob execution)	■
Backset	25	■
	30	■
	35	■
	40	■
	45	■
	50	■
	55	■
Face plate	Stainless steel	■
	Steel zinc-plated	■
Face plate width	16	◘
	20	◘
	24	■
Hub	8 mm	■
DIN left / DIN right useable		■

■ Yes - No ◘ On request

Description

- Mortise lock for profile frame doors
- Dimensioning conform to **DIN 18251-2**
- Safety requirements acc. to **EN 12 209**
- Safety level 4 on 25 mm
- Safety level 6 on 30 - 55 mm
- Shiftable latch bolt
- Safety bolt with rotating steel key-bolts

On request individual plate stamping possible at extra charge.

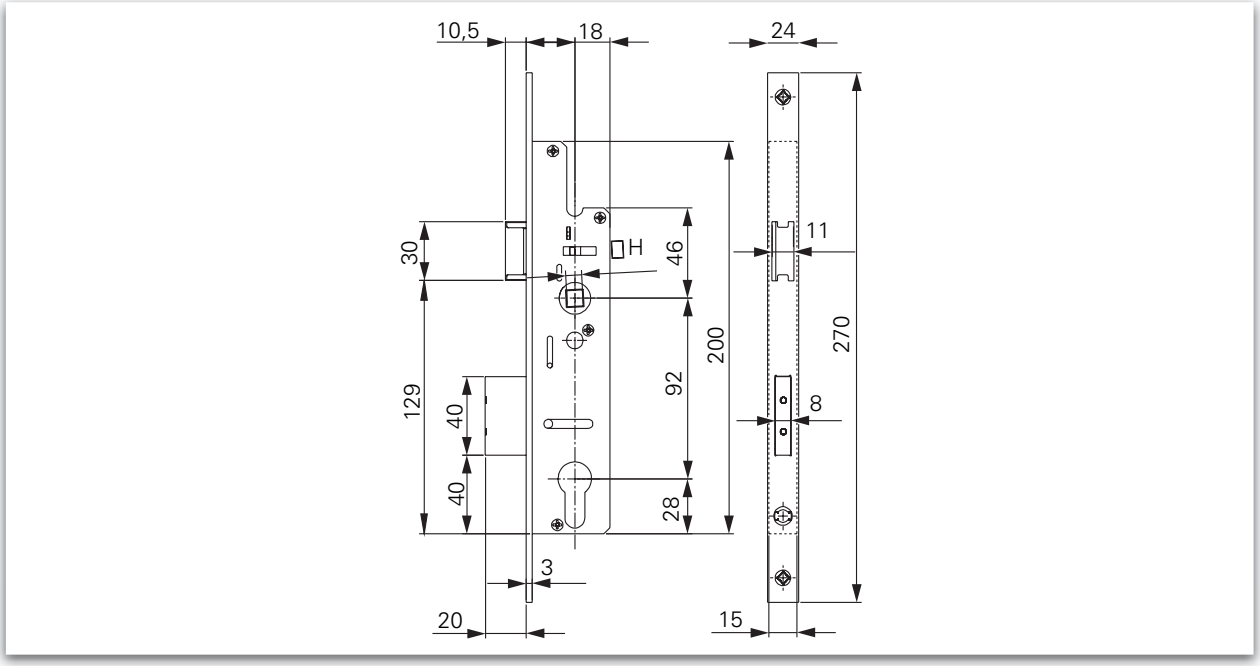

Dimensioning: GBS 60

Swissdoor ApS • Stenhuggervej 2 • 5471 Søndersø • Danmark Telefon +45 86 28 00 00 • mail@swissdoor.dk • www.swissdoor.dk

GBS 60 ■ Mortise lock for profile frame doors

Face plate: stainless steel

PZ-92 W (W = handle / knob execution)	Hub	Face plate	Backset	Article number
Unrebated door Face plate: 24 x 270 mm	8	square	25	2060abb01q30500
			30	2060acb01q30500
			35	2060adb01q30500
			40	2060aeb01q30500
			45	2060afb01q30500
			50	2060agb01q30500
			55	2060ahb01q30500

Face plate: zinc-plated

PZ-92 W (W = handle / knob execution)	Hub	Face plate	Backset	Article number
Unrebated door Face plate: 24 x 270 mm	8	square	25	2060abb01q10500
			30	2060acb01q10500
			35	2060adb01q10500
			40	2060aeb01q10500
			45	2060afb01q10500
			50	2060agb01q10500
			55	2060ahb01q10500

GBS 60 ■ Mortise lock for profile frame doors ■ With roller latch

Product characteristics		
Lock type	PZ-92 W (W = handle / knob execution)	■
Backset	25	■
	30	■
	35	■
	40	■
	45	■
	50	■
	55	■
Face plate	Stainless steel	■
	Steel zinc-plated	■
Face plate width	16	◘
	20	◘
	24	■
Hub	8 mm	■
DIN left / DIN right useable		■

■ Yes - No ◘ On request

Description

- Mortise lock for profile frame doors
- Dimensioning conform to **DIN 18251-2**
- Safety requirements acc. to **EN 12 209**
- Safety level 4 on 25 mm
- Safety level 6 on 30 - 55 mm
- Safety bolt with rotating steel key-bolts

On request individual plate stamping possible at extra charge.

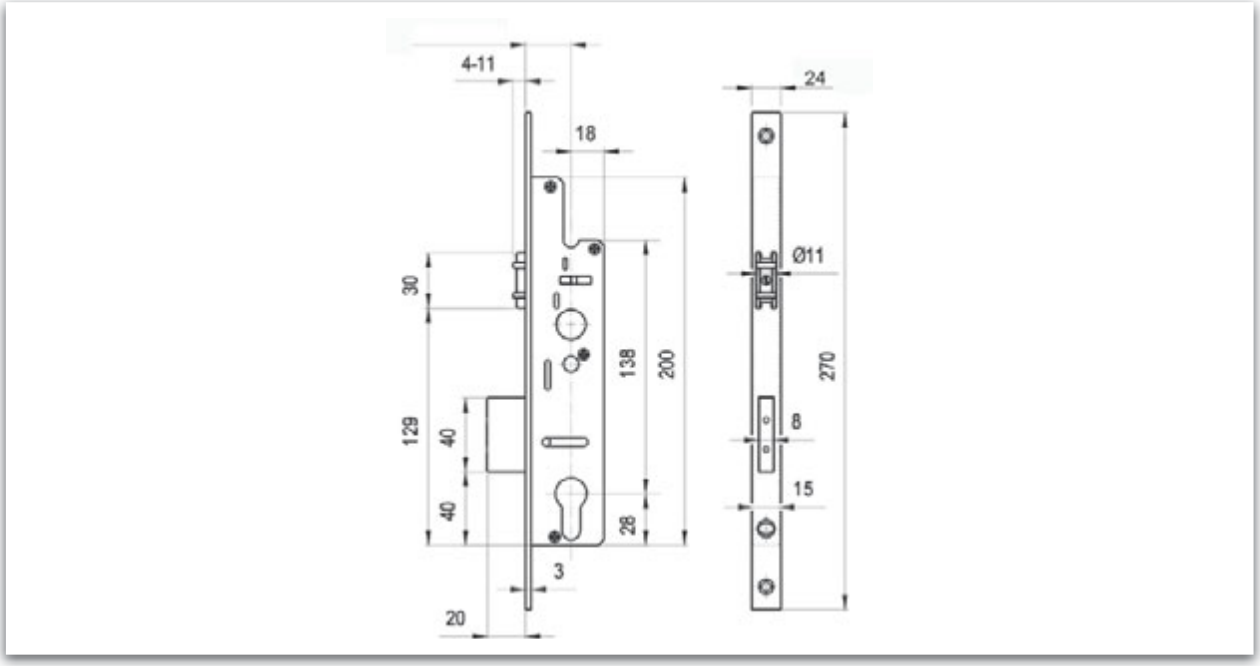

Dimensioning: GBS 60 with roller latch

Swissdoor ApS • Stenhuggervej 2 • 5471 Søndersø • Danmark Telefon +45 86 28 00 00 • mail@swissdoor.dk • www.swissdoor.dk

GBS 60 ■ Mortise lock for profile frame doors ■ With roller latch

Roller latch face plate: stainless steel

PZ-92 W (W = handle / knob execution)	Hub	Face plate	Backset	Article number
Unrebated door Face plate: 24 x 270 mm	8	square	25	2060abb21q30500
			30	2060acb21q30500
			35	2060adb21q30500
			40	2060aeb21q30500
			45	2060afb21q30500
			50	2060agb21q30500
			55	2060ahb21q30500

Roller latch face plate: zinc-plated

PZ-92 W (W = handle / knob execution)	Hub	Face plate	Backset	Article number
Unrebated door Face plate: 24 x 270 mm	8	square	25	2060abb01q10500
			30	2060acb01q10500
			35	2060adb01q10500
			40	2060aeb01q10500
			45	2060afb01q10500
			50	2060agb01q10500
			55	2060ahb01q10500

GBS 70 ■ Mortise lock for profile frame doors ■ For fire-proof doors

Product characteristics		
Lock type	PZ-92 W (W = handle / knob execution)	■
Backset	25	■
	30	■
	35	■
	40	■
	45	■
	50	■
	55	■
Face plate	Stainless steel	■
	Steel zinc-plated	■
Face plate width	16	◘
	20	◘
	24	■
Hub	9 mm	■
DIN left / DIN right useable		■
Suitable for the use on fire- and smoke control doors	F	■

■ Yes - No ◘ On request

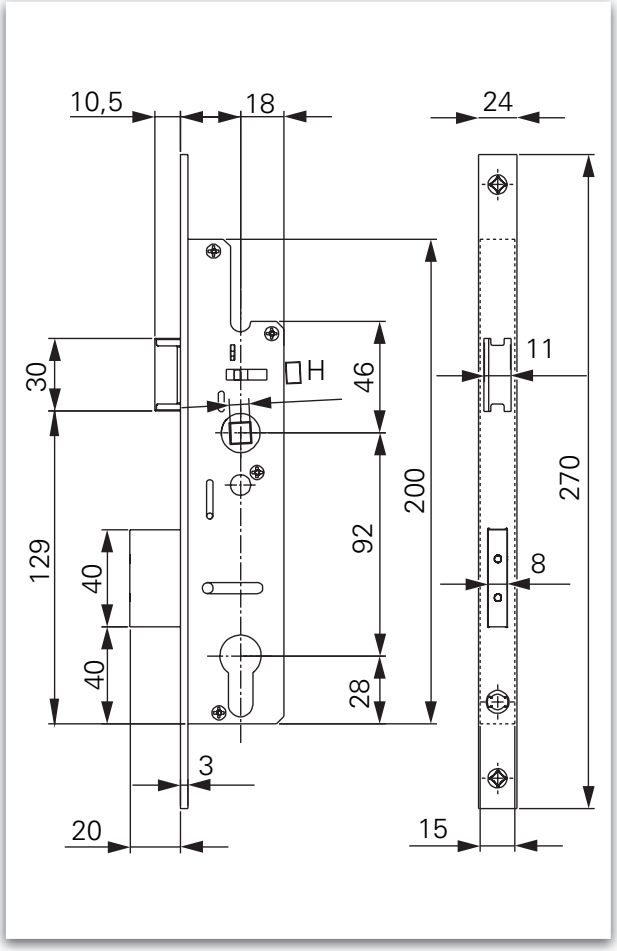

Dimensioning: GBS 70

Description

- Mortise lock for profile frame doors
- Suitable for fire-proof doors
- Dimensioning conform to **DIN 18251-2**
- safety requirements acc. to **EN 12 209**
- Safety level 4 on 25 mm
- Safety level 6 on 30 - 55 mm
- Shiftable latch bolt
- Safety bolt with rotating steel key-bolts

On request individual plate stamping possible at extra charge.

Swissdoor ApS • Stenhuggervej 2 • 5471 Søndersø • Danmark Telefon +45 86 28 00 00 • mail@swissdoor.dk • www.swissdoor.dk

GBS 70 ■ Mortise lock for profile frame doors ■ For fire-proof doors

ECO

F

Face plate: stainless steel

PZ-92 W (W = handle / knob execution)	Face plate	Backset		Article number
Rebated door Face plate: 24 x 270 mm	square	25		2070abb02q30500
		30		2070acb02q30500
		35		2070adb02q30500
		40		2070aeb02q30500
		45		2070afb02q30500
		50		2070agb02q30500
		55		2070ahb02q30500

Face plate: zinc-plated

PZ-92 W (W = handle / knob execution)	Face plate	Backset		Article number
Rebated door Face plate: 24 x 270 mm	square	25		2070abb02q10500
		30		2070acb02q10500
		35		2070adb02q10500
		40		2070aeb02q10500
		45		2070afb02q10500
		50		2070agb02q10500
		55		2070ahb02q10500

GBS 71 ■ Mortise lock for profile frame doors ■ For fire-and emergency exit doors

Product characteristics		
Lock type	PZ-92 W (W = handle / knob execution)	■
	RZ-94 W (W = handle / knob execution)	◘
Backset	25	■
	30	■
	35	■
	40	■
	45	■
Panic function	B	■
	E	■
Face plate	Stainless steel	■
Face plate width	24	■
Face plate length	245 mm	■
	400 mm	■
Hub	9 mm	■
Suitable for the use on fire- and smoke control doors	F	■

■ Yes - No ◘ On request

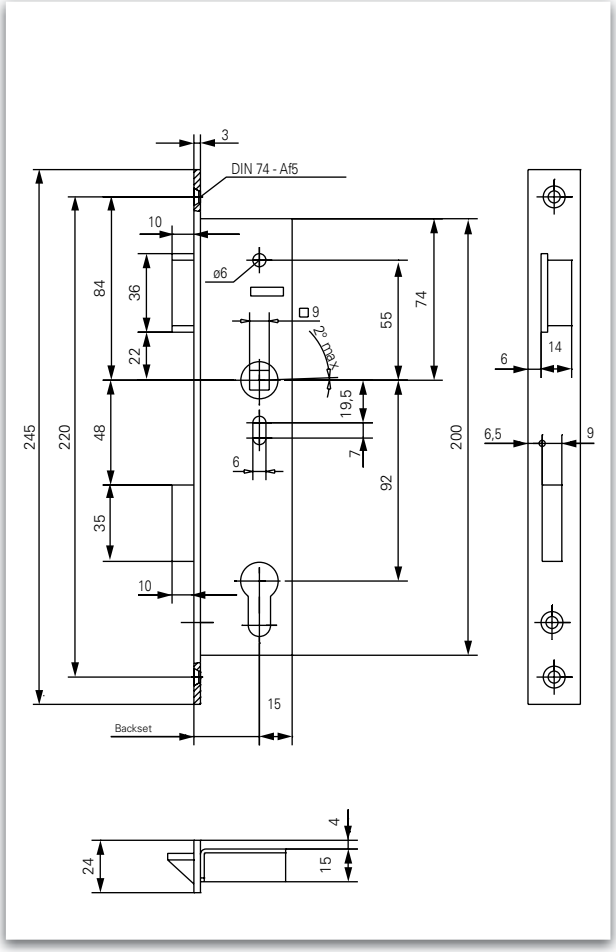

Dimensioning: GBS 71

Description

- Mortise lock for single leaf profile frame doors
- Suitable for fire- and emergency exit doors
- Made completely of fire-resistant materials
- Special version: Dead bolt and latch bolt 3 mm or 5 mm projected
- Single-turn dead bolt

On request individual plate stamping possible at extra charge.

Swissdoor ApS • Stenhuggervej 2 • 5471 Søndersø • Danmark Telefon +45 86 28 00 00 • mail@swissdoor.dk • www.swissdoor.dk

GBS 71 ■ Mortise lock for profile frame doors ■ For fire-and emergency exit doors

F

Without panic function

PZ-92 W (W = handle / knob execution)	Face plate	Backset		Article number
Unrebated door Face plate: 24 x 245 mm	square	25	L	2071A2aE40fT013
			R	2071A2aE40fT014
		30	L	2071A2aG40fT013
			R	2071A2aG40fT014
		35	L	2071A2aH40fT013
			R	2071A2aH40fT014
		40	L	2071A2aI40fT013
			R	2071A2aI40fT014
		45	L	2071A2aJ40fT013
			R	2071A2aJ40fT014

PZ-92 W (W = handle / knob execution)	Face plate	Backset		Article number
Unrebated door Face plate: 24 x 400 mm	square	25	L	2071A2aE40kT013
			R	2071A2aE40kT014
		30	L	2071A2aG40kT013
			R	2071A2aG40kT014
		35	L	2071A2aH40kT013
			R	2071A2aH40kT014
		40	L	2071A2aI40kT013
			R	2071A2aI40kT014
		45	L	2071A2aJ40kT013
			R	2071A2aJ40kT014

Panic function B

PZ-92	Face plate	Backset		Article number
Unrebated door Face plate: 24 x 245 mm	square	25	L	2071A2aE40fTP11
			R	2071A2aE40fTP12
		30	L	2071A2aG40fTP11
			R	2071A2aG40fTP12
		35	L	2071A2aH40fTP11
			R	2071A2aH40fTP12
		40	L	2071A2aI40fTP11
			R	2071A2aI40fTP12
		45	L	2071A2aJ40fTP11
			R	2071A2aJ40fTP12

PZ-92	Face plate	Backset		Article number
Unrebated door Face plate: 24 x 400 mm	square	25	L	2071A2aE40kTP11
			R	2071A2aE40kTP12
		30	L	2071A2aG40kTP11
			R	2071A2aG40kTP12
		35	L	2071A2aH40kTP11
			R	2071A2aH40kTP12
		40	L	2071A2aI40kTP11
			R	2071A2aI40kTP12
		45	L	2071A2aJ40kTP11
			R	2071A2aJ40kTP12

Panic function E

PZ-92 W (W = handle / knob execution)	Face plate	Backset		Article number
Unrebated door Face plate: 24 x 245 mm	square	25	L	2071A2aE40fTQ13
			R	2071A2aE40fTQ14
		30	L	2071A2aG40fTQ13
			R	2071A2aG40fTQ14
		35	L	2071A2aH40fTQ13
			R	2071A2aH40fTQ14
		40	L	2071A2aI40fTQ13
			R	2071A2aI40fTQ14
		45	L	2071A2aJ40fTQ13
			R	2071A2aJ40fTQ14

PZ-92 W (W = handle / knob execution)	Face plate	Backset		Article number
Unrebated door Face plate: 24 x 400 mm	square	25	L	2071A2aE40kTQ13
			R	2071A2aE40kTQ14
		30	L	2071A2aG40kTQ13
			R	2071A2aG40kTQ14
		35	L	2071A2aH40kTQ13
			R	2071A2aH40kTQ14
		40	L	2071A2aI40kTQ13
			R	2071A2aI40kTQ14
		45	L	2071A2aJ40kTQ13
			R	2071A2aJ40kTQ14

GBS 72 ■ Mortise lock for profile frame doors ■ For fire-and emergency exit doors

Product characteristics		
Lock type	PZ-92 W (W = handle / knob execution)	■
	RZ-94 W (W = handle / knob execution)	◘
Backset	25	■
	30	■
	35	■
	40	■
	45	■
Panic function	B	■
	E	■
Face plate	Stainless steel	■
Face plate width	24	■
Hub	9 mm	■
Suitable for the use on fire- and smoke control doors	F	■

■ Yes - No ◘ On request

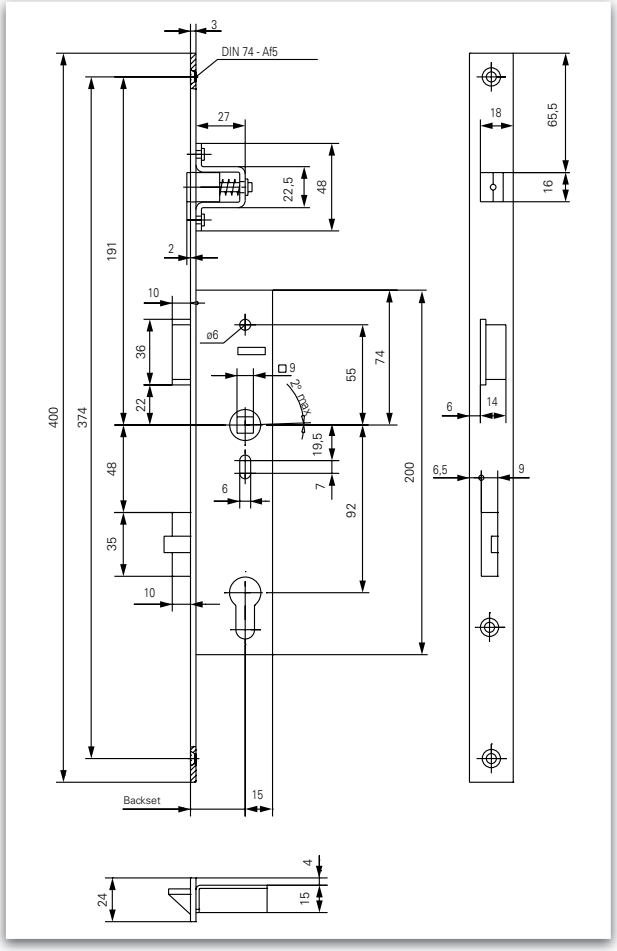

Dimensioning: GBS 72

Description

- Mortise lock for double leaf profile frame doors
- Suitable for fire- and emergency exit doors
- Made completely of fire-resistant materials
- Special version: Dead bolt and latch bolt 3 mm or 5 mm projected
- Single-turn dead bolt
- Special feature: Adjustable release device for automatically locking the inactive door leaf.
- Related counter lock for passive leaf: GBS 73 on page 444

On request individual plate stamping possible at extra charge.

Swissdoor ApS • Stenhuggervej 2 • 5471 Søndersø • Danmark Telefon +45 86 28 00 00 • mail@swissdoor.dk • www.swissdoor.dk

GBS 72 ■ Mortise lock for profile frame doors ■ For fire-and emergency exit doors

F

Without panic function

PZ-92 W (W = handle / knob execution)	Face plate	Backset		Article number
Unrebated door Face plate: 24 x 400 mm	square	25	L	2072A2aE40kT013
			R	2072A2aE40kT014
		30	L	2072A2aG40kT013
			R	2072A2aG40kT014
		35	L	2072A2aH40kT013
			R	2072A2aH40kT014
		40	L	2072A2aI40kT013
			R	2072A2aI40kT014
		45	L	2072A2aJ40kT013
			R	2072A2aJ40kT014

Panic function B

PZ-92	Face plate	Backset		Article number
Unrebated door Face plate: 24 x 400 mm	square	25	L	2072A2aE40kTP11
			R	2072A2aE40kTP12
		30	L	2072A2aG40kTP11
			R	2072A2aG40kTP12
		35	L	2072A2aH40kTP11
			R	2072A2aH40kTP12
		40	L	2072A2aI40kTP11
			R	2072A2aI40kTP12
		45	L	2072A2aJ40kTP11
			R	2072A2aJ40kTP12

Panic function E

PZ-92 W (W = handle / knob execution)	Face plate	Backset		Article number
Unrebated door Face plate: 24 x 400 mm	square	25	L	2072A2aE40kTQ13
			R	2072A2aE40kTQ14
		30	L	2072A2aG40kTQ13
			R	2072A2aG40kTQ14
		35	L	2072A2aH40kTQ13
			R	2072A2aH40kTQ14
		40	L	2072A2aI40kTQ13
			R	2072A2aI40kTQ14
		45	L	2072A2aJ40kTQ13
			R	2072A2aJ40kTQ14

GBS 73 ■ Mortise lock for profile frame doors ■ For fire-and emergency exit doors

Product characteristics		
Backset	25	■
	30	■
	35	■
	40	■
	45	■
Face plate	Stainless steel	■
Face plate width	24	■
Hub	9 mm	■
DIN left / DIN right useable		■
Suitable for the use on fire- and smoke control doors	F	■

■ Yes - No ◘ On request

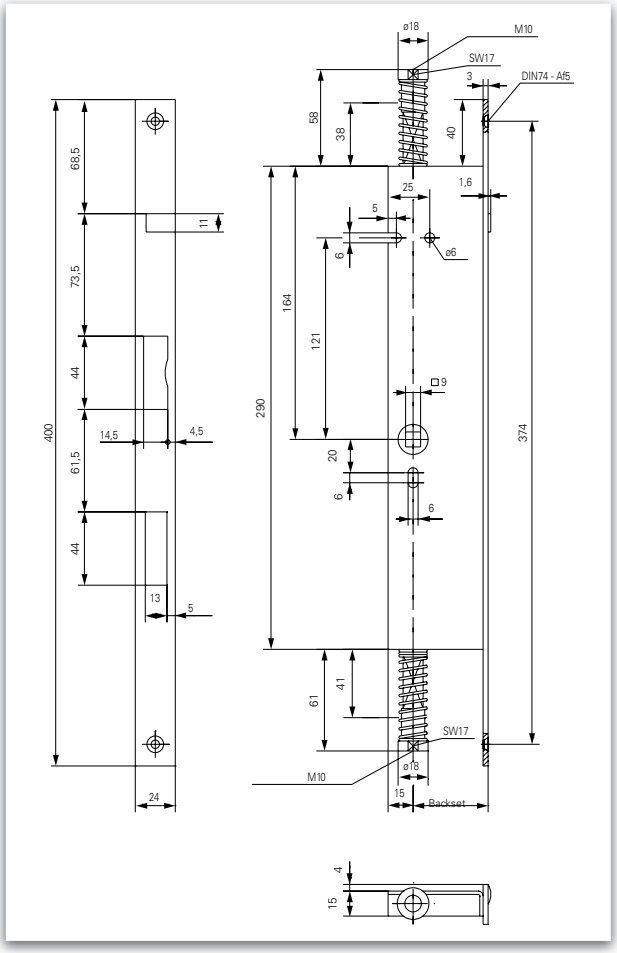

Dimensioning: GBS 73

Description

- Counter lock for double leaf profile frame doors
- For fire- and smoke control doors
- Made completely of fire-resistant materials
- Special feature: Adjustable release device for automatically locking the inactive door leaf. No additional switch lock needed! Automatical locking of passive leaf adjustable
- Related lock for active leaf on page 442. Respective accessories on page 474

On request individual plate stamping possible at extra charge.

Swissdoor ApS • Stenhuggervej 2 • 5471 Søndersø • Danmark Telefon +45 86 28 00 00 • mail@swissdoor.dk • www.swissdoor.dk

GBS 73 ■ Mortise lock for profile frame doors ■ For fire-and emergency exit doors

ECO

F

Panic function with automatic locking device for inactive door leaf

	Face plate	Backset		Article number
Unrebated door Face plate: 24 x 400 mm	square	25	L	2073X00E40kTM11
			R	2073X00E40kTM12
		30	L	2073X00G40kTM11
			R	2073X00G40kTM12
		35	L	2073X00H40kTM11
			R	2073X00H40kTM12
		40	L	2073X00I40kTM11
			R	2073X00I40kTM12
		45	L	2073X00J40kTM11
			R	2073X00J40kTM12

Panic function with manual locking device for inactive door leaf

	Face plate	Backset		Article number
Unrebated door Face plate: 24 x 400 mm	square	25	L	2073Y00E40kTM11
			R	2073Y00E40kTM12
		30	L	2073Y00G40kTM11
			R	2073Y00G40kTM12
		35	L	2073Y00H40kTM11
			R	2073Y00H40kTM12
		40	L	2073Y00I40kTM11
			R	2073Y00I40kTM12
		45	L	2073Y00J40kTM11
			R	2073Y00J40kTM12

GBS 76 ■ Mortise lock for single or double leaf fire-proof doors

Product characteristics		
Lock type	PZ-92 W (W = handle / knob execution)	■
	RZ-74 W (W = handle / knob execution)	◘
Backset	25	■
	30	■
	35	■
	40	■
	45	■
Panic function	B	■
	E	■
	without*	◘
Face plate	Stainless steel	■
Face plate width	24	■
Hub	9 mm	■
Suitable for the use on fire- and smoke control doors	F	■

■ Yes - No ◘ On request *With free-running hub

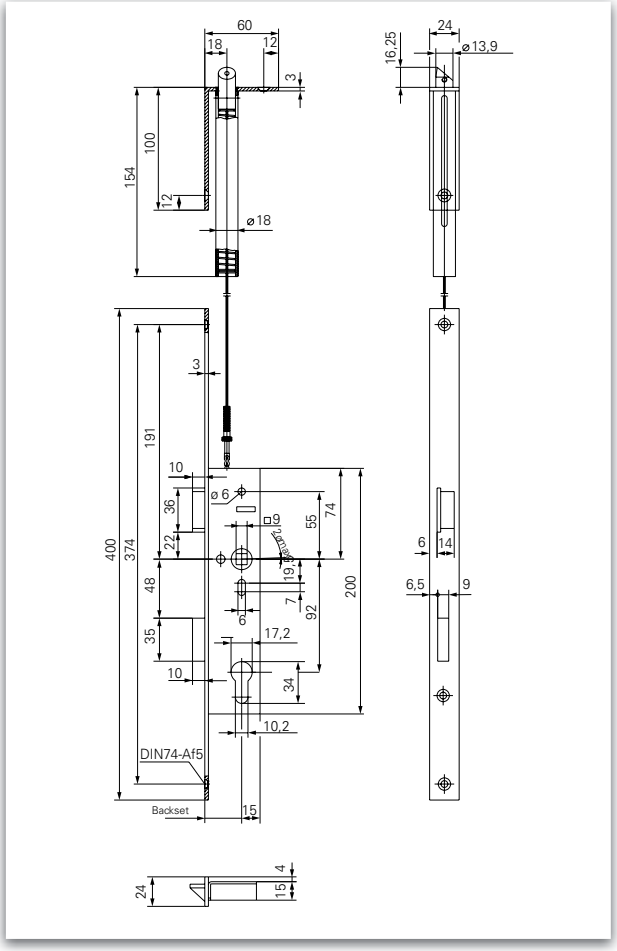

Dimensioning: GBS 76

Description

- Mortise lock for single or double leaf fire-proof doors
- Suitable for fire- and emergency exit doors
- Made completely of fire-resistant materials
- Dead bolt and latch bolt flush or 3 mm or 5 mm projected
- Adjustable, with top corner latch-lock as additional locking point. Corner latch lock can also be used independently from the lock
- Corner angle manual on request

On request individual plate stamping possible at extra charge.

Swissdoor ApS • Stenhuggervej 2 • 5471 Søndersø • Danmark Telefon +45 86 28 00 00 • mail@swissdoor.dk • www.swissdoor.dk

GBS 76 ■ Mortise lock for single or double leaf fire-proof doors

F

Without panic function

PZ-92 W (W = handle / knob execution)	Face plate	Backset		Article number
Unrebated door Face plate: 24 x 400 mm	square	25	L	2076A2aE40kT0U3
			R	2076A2aE40kT0U4
		30	L	2076A2aG40kT0U3
			R	2076A2aG40kT0U4
		35	L	2076A2aH40kT0U3
			R	2076A2aH40kT0U4
		40	L	2076A2aI40kT0U3
			R	2076A2aI40kT0U4
		45	L	2076A2aJ40kT0U3
			R	2076A2aJ40kT0U4

With free-running hub (use in double-leaf doors without panic function)

PZ-92 W (W = handle / knob execution)	Face plate	Backset		Article number
Unrebated door Face plate: 24 x 400 mm	square	25	L	2076A2aE80kT0U3
			R	2076A2aE80kT0U4
		30	L	2076A2aG80kT0U3
			R	2076A2aG80kT0U4
		35	L	2076A2aH80kT0U3
			R	2076A2aH80kT0U4
		40	L	2076A2aI80kT0U3
			R	2076A2aI80kT0U4
		45	L	2076A2aJ80kT0U3
			R	2076A2aJ80kT0U4

Panic function B

PZ-92	Face plate	Backset		Article number
Unrebated door Face plate: 24 x 400 mm	square	25	L	2076A2aE40kTPU1
			R	2076A2aE40kTPU2
		30	L	2076A2aG40kTPU1
			R	2076A2aG40kTPU2
		35	L	2076A2aH40kTPU1
			R	2076A2aH40kTPU2
		40	L	2076A2aI40kTPU1
			R	2076A2aI40kTPU2
		45	L	2076A2aJ40kTPU1
			R	2076A2aJ40kTPU2

Panic function E

PZ-92 W (W = handle / knob execution)	Face plate	Backset		Article number
Unrebated door Face plate: 24 x 400 mm	square	25	L	2076A2aE40kTQU3
			R	2076A2aE40kTQU4
		30	L	2076A2aG40kTQU3
			R	2076A2aG40kTQU4
		35	L	2076A2aH40kTQU3
			R	2076A2aH40kTQU4
		40	L	2076A2aI40kTQU3
			R	2076A2aI40kTQU4
		45	L	2076A2aJ40kTQU3
			R	2076A2aJ40kTQU4

GBS 81 ■ Mortise lock for fire-proof doors

Product characteristics		
Lock type	PZ-72 W (W = handle / knob execution)	■
	RZ-74 W (W = handle / knob execution)	◘
Backset	55	■
	65	■
	80	◘
	100	◘
Panic function	B*	■
	D	■
	E	■
Face plate	Stainless steel Steel zinc-plated	■ ■
Face plate width	20	■
	24	■
Hub	9 mm	■
Suitable for the use on fire- and smoke control doors	F	■
Tested acc. EN / DIN	DIN 18 250 EN 179	

■ Yes - No ◘ On request *Refer to GBS 92 on page 458

Description

- Mortise lock for fire-proof doors
- Suitable for fire- and emergency exit doors
- Tested and certified acc. to **DIN 18250**
- Tested and certified acc. to **EN 179**
- Made completely of fire-resistant materials
- Version panic function B on page 458
- Face plate square on request

On request individual plate stamping possible at extra charge.

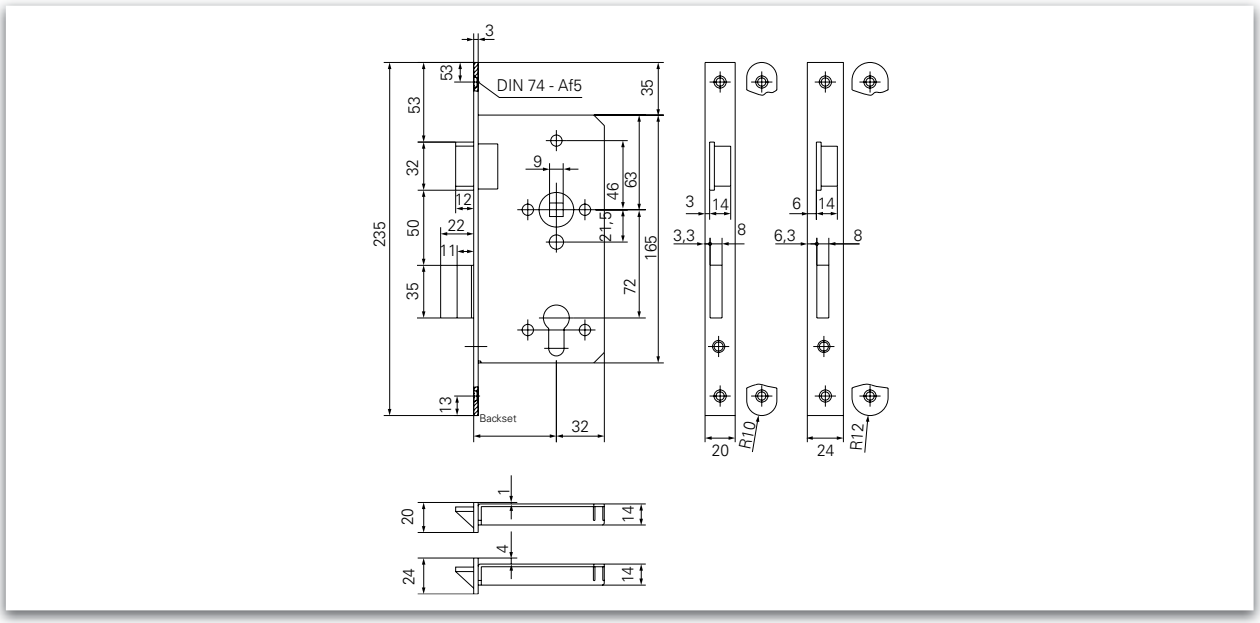

Dimensioning: GBS 81

Swissdoor ApS • Stenhuggervej 2 • 5471 Søndersø • Danmark Telefon +45 86 28 00 00 • mail@swissdoor.dk • www.swissdoor.dk

GBS 81 ■ Mortise lock for fire-proof doors

DIN 18 250

F

Without panic function / Face plate stainless steel satin

PZ-72 W (W = handle / knob execution)	Face plate	Backset		Article number
Rebated door Face plate: 20 x 235 mm	round	55	L	2281A2AL40BT013
			R	2281A2AL40BT014
		65	L	2281A2AN40BK013
			R	2281A2AN40BK014
Unrebated door Face plate: 24 x 235 mm		55	L	2281A2AL40aT013
			R	2281A2AL40aT014
		65	L	2281A2AN40aK013
			R	2281A2AN40aK014

Without panic function / Face plate steel zinc-plated

PZ-72 W (W = handle / knob execution)	Face plate	Backset		Article number
Rebated door Face plate: 20 x 235 mm	round	55	L	2281A2AL40BJ013
			R	2281A2AL40BJ014
		65	L	2281A2AN40BJ013
			R	2281A2AN40BJ014
Unrebated door Face plate: 24 x 235 mm		55	L	2281A2AL40aJ013
			R	2281A2AL40aJ014
		65	L	2281A2AN40aJ013
			R	2281A2AN40aJ014

EN 179

DIN 18 250

F

Panic function D / Face plate stainless steel satin

PZ-72	Face plate	Backset		Article number
Rebated door Face plate: 20 x 235 mm	round	55	refer to GBS 92 on page 458	
		65	L	2281A2AN40BTM11
			R	2281A2AN40BTM12
Unrebated door Face plate: 24 x 235 mm		55	refer to GBS 92 on page 458	
		65	L	2281A2AN40aTM11
			R	2281A2AN40aTM12

Panic function D / Face plate steel zinc-plated

PZ-72	Face plate	Backset		Article number
Rebated door Face plate: 20 x 235 mm	round	65	L	2281A2AN40BJM11
			R	2281A2AN40BJM11
Unrebated door Face plate: 24 x 235 mm		65	L	2281A2AN40aJM11
			R	2281A2AN40aJM12

EN 179

DIN 18 250

F

Panic function E / Face plate stainless steel satin

PZ-72 W (W = handle / knob execution)	Face plate	Backset		Article number
Rebated door Face plate: 20 x 235 mm	round	55	L	2281A2AL40BTQ13
			R	2281A2AL40BTQ14
		65	L	2281A2AN40aKM13
			R	2281A2AN40aKM14
Unrebated door Face plate: 24 x 235 mm		55	L	2281A2AL40aTQ13
			R	2281A2AL40aTQ14
		65	L	2281A2AN40aTM13
			R	2281A2AN40aTM14

Panic function E / Face plate steel zinc-plated

PZ-72 W (W = handle / knob execution)	Face plate	Backset		Article number
Rebated door Face plate: 20 x 235 mm	round	55	L	2281A2AL40BJQ13
			R	2281A2AL40BJQ14
		65	L	2281A2AN40BJM13
			R	2281A2AN40BJM14
Unrebated door Face plate: 24 x 235 mm		55	L	2281A2AL40aJQ13
			R	2281A2AL40aJQ14
		65	L	2281A2AN40aJM13
			R	2281A2AN40aJM14

GBS 82 ■ Mortise lock ■ For fire-proof doors

Product characteristics		
Lock type	PZ-72 W (W = handle / knob execution)	■
Backset	65	■
Panic function	D	■
	E	■
Face plate	Steel zinc-plated	■
Face plate width	24	■
Hub	9 mm	■
Suitable for the use on fire- and smoke control doors	F	■
Tested acc. EN / DIN	EN 179 EN 1125 DIN 18 250	
DIN left / DIN right useable		■

■ Yes - No ◘ On request

Description

- Mortise lock for fire-proof doors
- Suitable for fire- and emergency exit doors
- Tested and certified acc. to **DIN 18250**
- Tested and certified acc. to **EN 179** and **EN 1125**
- Made completely of fire-resistant materials

On request individual plate stamping possible at extra charge.

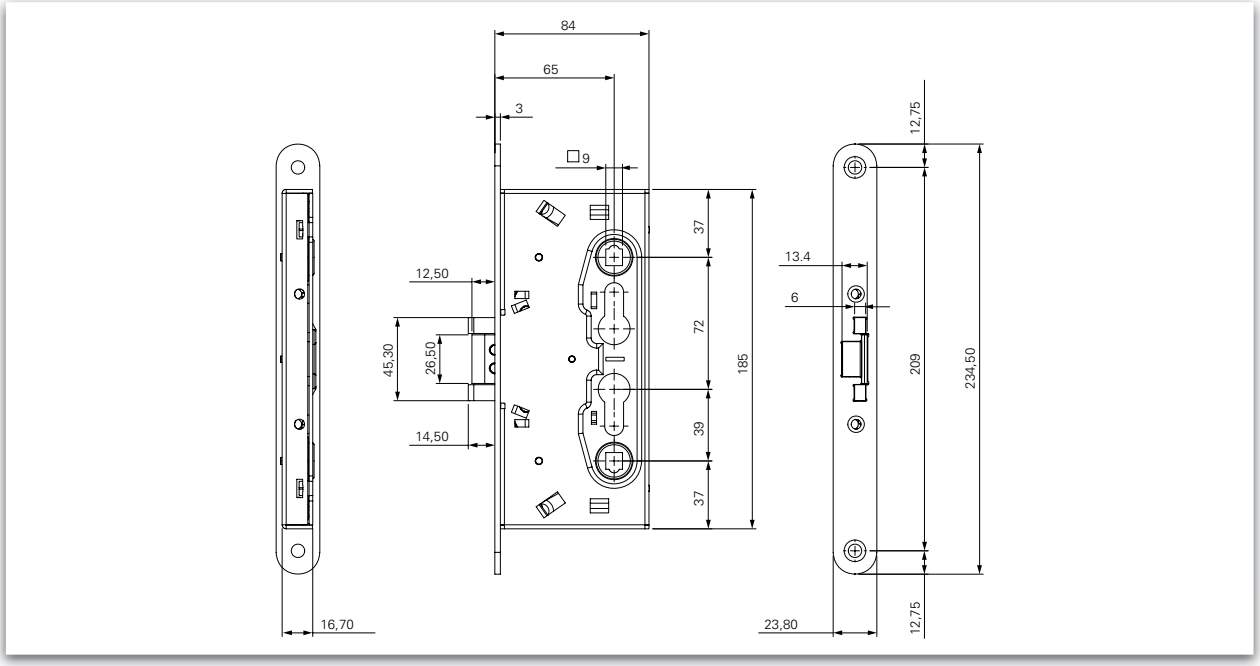

Dimensioning: GBS 82

Swissdoor ApS • Stenhuggervej 2 • 5471 Søndersø • Danmark Telefon +45 86 28 00 00 • mail@swissdoor.dk • www.swissdoor.dk

GBS 82 ■ Mortise lock ■ For fire-proof doors

DIN 18 250

F

Standard

PZ-72 W (W = handle / knob execution)	Face plate	Backset	Article number
Unrebated door Face plate: 24 x 235 mm	round	65	2082aYes02m10000

EN 179

EN 1125

F

Panic function E (emergency exit function)

PZ-72 W (W = handle / knob execution)	Face plate	Backset	Article number
Unrebated door Face plate: 24 x 235 mm	round	65	2082aYes02m14000

EN 179

EN 1125

F

Panic function D (Transit function)

PZ-72	Face plate	Backset	Article number
Unrebated door Face plate: 24 x 235 mm	round	65	2082aYes02m13000

GBS 83 ■ Mortise lock for fire-proof doors

Product characteristics		
Lock type	PZ-72	■
Backset	65	■
Panic function	B	■
Face plate	Steel zinc-plated	■
Face plate width	24	■
Hub	9 mm	■
Suitable for the use on fire- and smoke control doors	F	■
Tested acc. EN / DIN	EN 179 EN 1125 DIN 18 250	
DIN left / DIN right useable		■

■ Yes - No ◘ On request

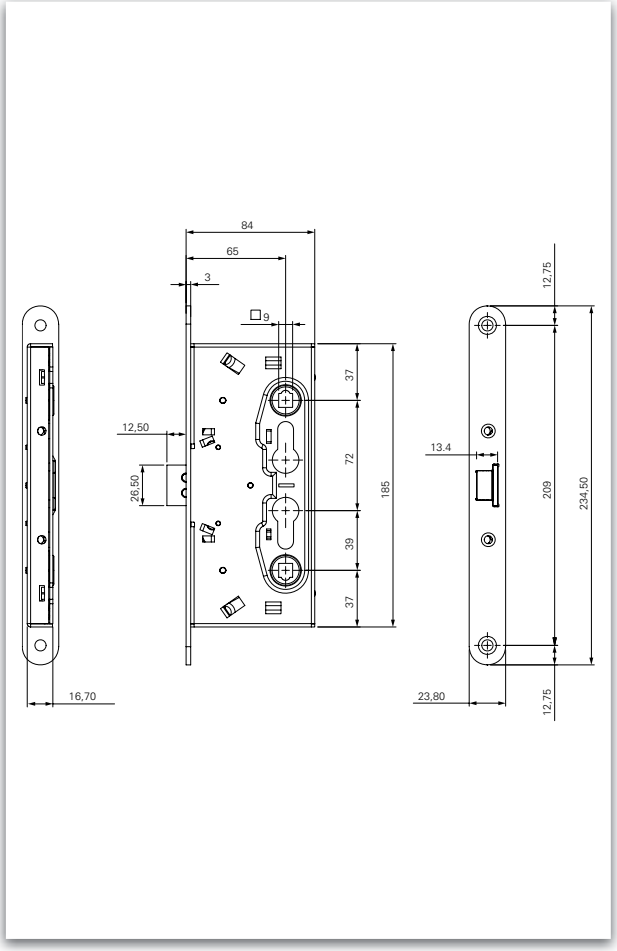

Dimensioning: GBS 83

Description

- Mortise lock for fire proof doors
- Suitable for fire- and emergency exit doors
- Tested and certified acc. to **DIN 18250**
- Tested and certified acc. to **EN 179 and EN 1125**
- Made completely of fire-resistant materials

On request individual plate stamping possible at extra charge.

EN 179
EN 1125
F

Panic function B (Key-operated spring bolt change)

PZ-72	Face plate	Backset	Article number
Unrebated door Face plate: 24 x 235 mm	round	65	2083aYes02m13000

Swissdoor ApS • Stenhuggervej 2 • 5471 Søndersø • Danmark Telefon +45 86 28 00 00 • mail@swissdoor.dk • www.swissdoor.dk

GBS 84 ■ Counter lock for fire proof doors

Product characteristics		
Backset	65	■
Face plate	Steel zinc-plated	■
Face plate width	24	■
Hub	9 mm	■
Suitable for the use on fire- and smoke control doors	F	■
Tested acc. EN / DIN	EN 179 EN 1125	
DIN left / DIN right useable		■

■ Yes - No ◘ On request

Description

- Counter lock for fire proof doors
- Suitable for fire- and emergency exit doors
- Tested and certified acc. to **EN 179** and **EN 1125**
- Made completely of fire-resistant materials
- Can also be used as manual shoot bolt guide (without handle set)

On request individual plate stamping possible at extra charge.

EN 179
EN 1125
F

Counter lock	Face plate	Backset	Article number
Unrebated door Face plate: 24 x 235 mm	round	65	2084aj002m11000

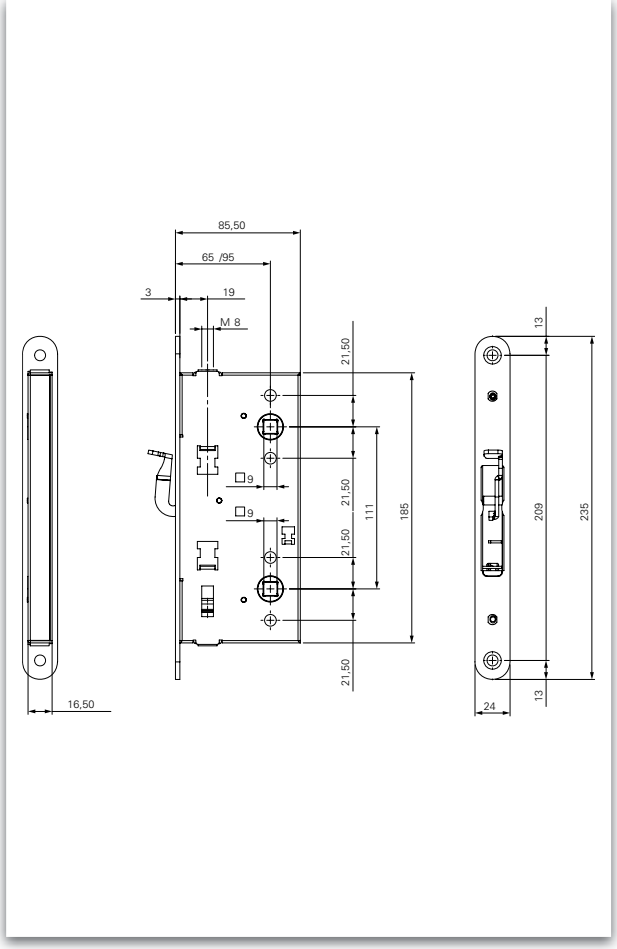

Dimensioning: GBS 84

GBS 90 ■ Automatic self-engaging panic mortise lock (AVP)

Product characteristics		
Lock type	PZ-72 W (W = handle / knob execution)	■
	RZ-74 W (W = handle / knob execution)	◘
Backset	55	■
	65	■
Face plate	Stainless steel	■
Face plate width	20	■
	24	■
Hub	9 mm	■
Suitable for the use on fire- and smoke control doors	F	■
Tested acc. EN / DIN	DIN 18 250	

■ Yes - No ◘ On request

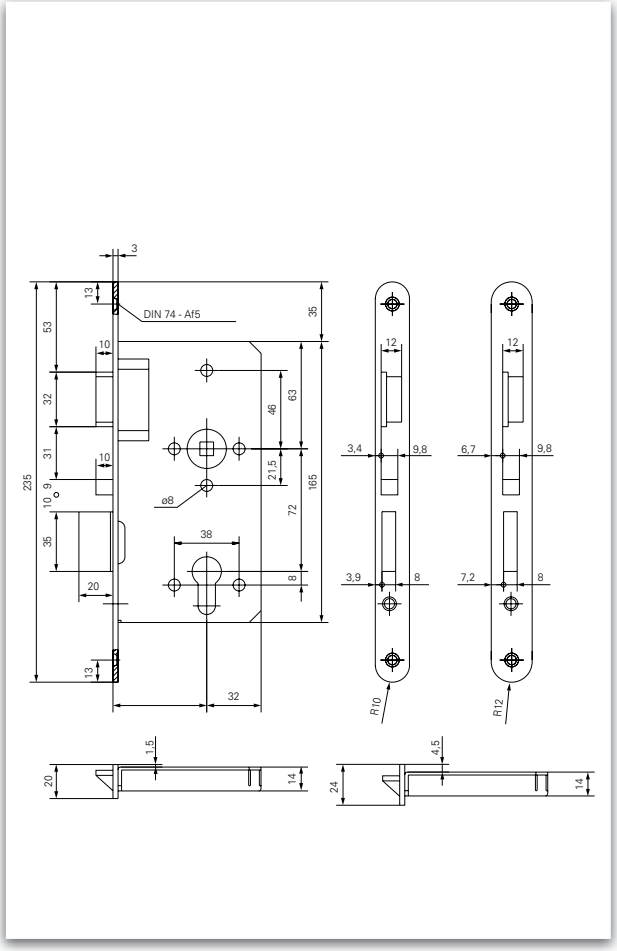

Dimensioning: GBS 90

Description

GBS 90 / GBS 90 F

- Automatic self-engaging panic mortise lock with panic function
- With closed locke case with 3-fold fastening with protection bushes
- Assembly dimension according to **DIN 18251**
- Stainless steel dead and latch bolt
- Acc. to DIN **EN 18250** also suitable for the use on fire-protection doors
- Automatic locking is effected by closing and consequently engaging the auxilliary latch

On request individual plate stamping possible at extra charge.

Swissdoor ApS • Stenhuggervej 2 • 5471 Søndersø • Danmark Telefon +45 86 28 00 00 • mail@swissdoor.dk • www.swissdoor.dk

GBS 90 ■ Automatic self-engaging panic mortise lock (AVP)

DIN 18 250

DIN 18 250

F

GBS 90 Standard

PZ-72 W (W = handle / knob execution)	Face plate	Backset		Article number
Rebated door Face plate: 20 x 235 mm	round	55	L	2090aha02h30300
			R	2090aha02h30400
		65	L	2090aYes02h30300
			R	2090aYes02h30400
Unrebated door Face plate: 24 x 235 mm		55	L	2090aha02m30300
			R	2090aha02m30400
		65	L	2090aYes02m30300
			R	2090aYes02m30400

GBS 90 F

PZ-72 W (W = handle / knob execution)	Face plate	Backset		Article number
Rebated door Face plate: 20 x 235 mm	round	55	L	2090aha08h30300
			R	2090aha08h30400
		65	L	2090aYes08h30300
			R	2090aYes08h30400
Unrebated door Face plate: 24 x 235 mm		55	L	2090aha08m30300
			R	2090aha08m30400
		65	L	2090aYes08m30300
			R	2090aYes08m30400

Special functions	
02 / Monitored dead bolt	
03 / Blocked handle on both sides, fail safe	
04 / Blocked handle on both sides, fail secure	
05 / Handle one side blocked, fail safe, B* or G*	
06 / Handle one side blocked, fail secure, B* or G*	
08 / 24-V version	
Micro switch	
Gold-plated contacts	max. 15V - 200 mA
Dead bolt off	Closer
Dead bolt on	Closer
Degree of protection	IP 40
Connection	
Flexible cable, provided by customer, max. cable diametre 1,5 mm²	
Blocking magnet, divided hub	
Nominal voltage	12V-
Supply voltage	10,5V- bis 14V-
Maximum rated input power	100 mA at 12V- =1,2W
Rel. duty cycle ED	100 %
Class of insulation	E (T-grenz = 1,2W)

B* = Hinge side G* = Hinge opposite side

GBS 91 ■ Automatic self-engaging panic mortise lock (AVP) for fire proof doors

Product characteristics		
Lock type	PZ-72 W (W = handle / knob execution)	■
	RZ-74 W (W = handle / knob execution)	◘
Backset	55	■
	65	■
Face plate	Steel zinc-plated	■
Face plate width	20 mm	■
	24 mm	■
Hub	9 mm	■
Suitable for the use on fire- and smoke control doors	F	■
Tested acc. EN / DIN	EN 179 EN 1125	

■ Yes - No ◘ On request

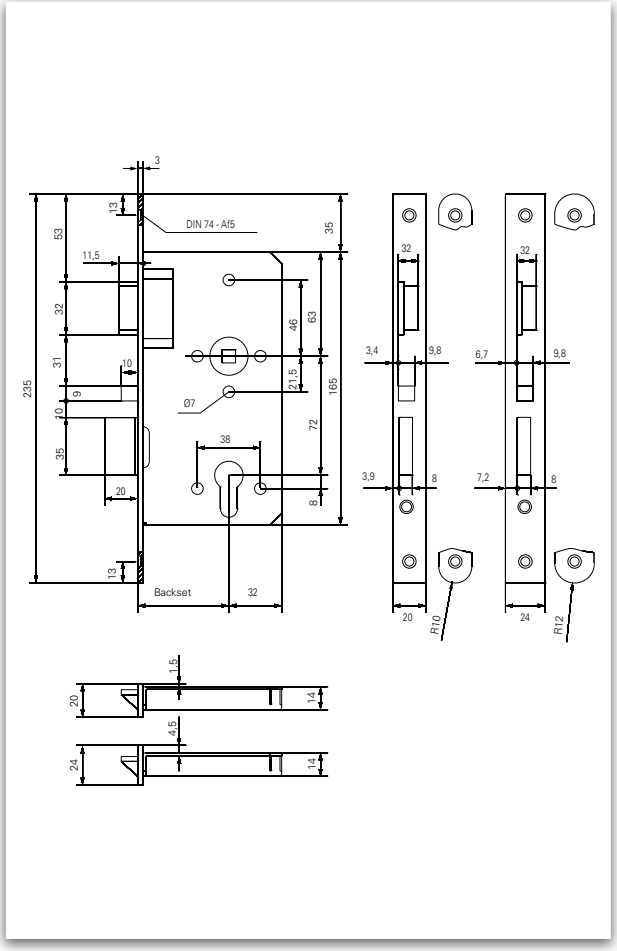

Dimensioning: GBS 91

Description

- Automatic self-engaging panic mortise lock
- Suitable for fire-protection doors
- Tested acc. to **EN 1125** and **EN 179**
- Made completely of fire-resistant materials
- Extras: Handle locking and interrogation of dead bolt position

On request individual plate stamping possible at extra charge.

Swissdoor ApS • Stenhuggervej 2 • 5471 Søndersø • Danmark Telefon +45 86 28 00 00 • mail@swissdoor.dk • www.swissdoor.dk

GBS 91 ■ Automatic self-engaging panic mortise lock (AVP) for fire proof doors

EN 179

EN 1125

F

PZ-72 W (W = handle / knob execution)	Face plate	Backset		Article number
Rebated door Face plate: 20 x 235 mm	round	55	L	2091aha02h30300
			R	2091aha02h30400
		65	L	2091aYes02h30300
			R	2091aYes02h30400
Unrebated door Face plate: 24 x 235 mm		55	L	2091aha02m30300
			R	2091aha02m30400
		65	L	2091aYes02m30300
			R	2091aYes02m30400

GBS 92 ■ Panic mortise lock for fire-proof doors

Product characteristics		
Lock type	PZ-72	■
Backset	55	■
	65	■
	80	■
	100	■
Panic function	B	■
	D	■
	E	■
Face plate	Stainless steel	■
Face plate width	20	■
	24	■
Hub	9 mm	■
Suitable for the use on fire- and smoke control doors	F	■
Tested acc. EN / DIN	EN 179 EN 1125	

■ Yes - No ◘ On request

Description

- Panic mortise lock
- Suitable for fire-protection doors
- Tested and certified acc. to **EN 179 and EN 1125**
- Made completely of fire-resistant materials
- Extras: interrogation of dead bolt position
- Face plate square on request

On request individual plate stamping possible at extra charge.

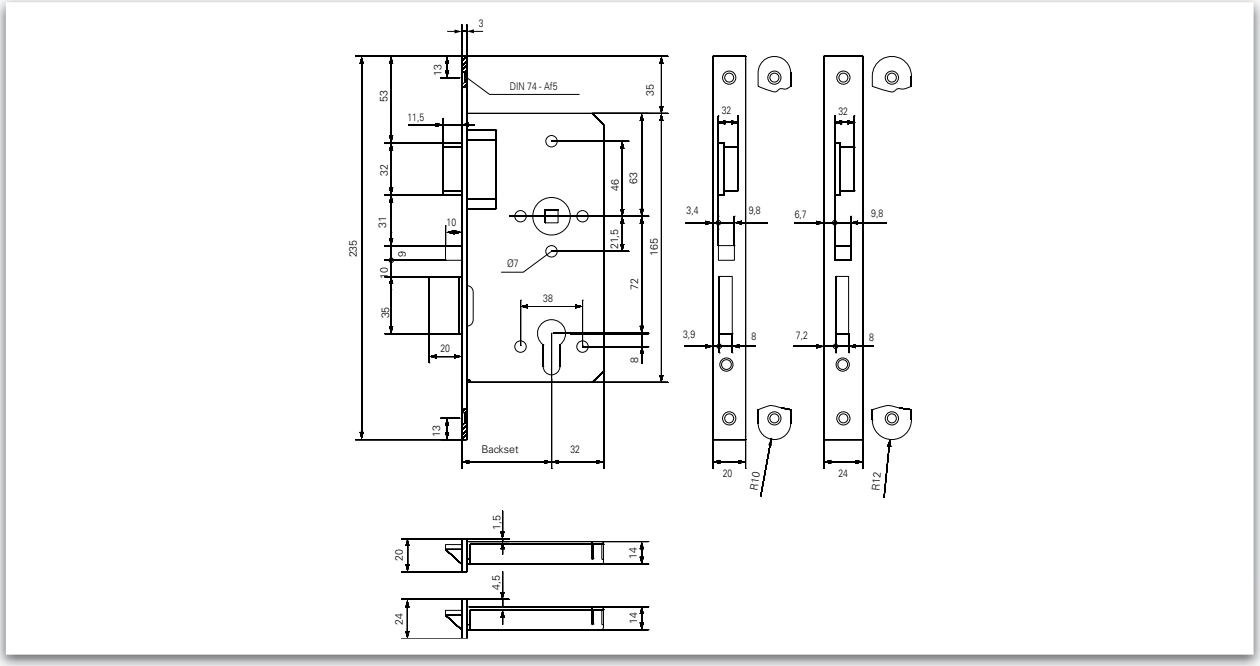

Dimensioning: GBS 92

Swissdoor ApS • Stenhuggervej 2 • 5471 Søndersø • Danmark Telefon +45 86 28 00 00 • mail@swissdoor.dk • www.swissdoor.dk

GBS 92 ■ Panic mortise lock for fire-proof doors

EN 179

EN 1125

F

Panic function B

PZ-72	Face plate	Backset		Article number
Rebated door Face plate: 20 x 235 mm	round	55	L	2092aha02h33100
			R	2092aha02h33200
		65	L	2092aYes02h33100
			R	2092aYes02h33200
		80	L	2092ama02h33100
			R	2092ama02h33200
		100	L	2092aqa02h33100
			R	2092aqa02h33200

PZ-72	Face plate	Backset		Article number
Unrebated door Face plate: 24 x 235 mm	round	55	L	2092aha02m33100
			R	2092aha02m33200
		65	L	2092aYes02m33100
			R	2092aYes02m33200
		80	L	2092ama02m33100
			R	2092ama02m33200
		100	L	2092aqa02m33100
			R	2092aqa02m33200

EN 179

EN 1125

F

Panic function D

PZ-72	Face plate	Backset		Article number
Rebated door Face plate: 20 x 235 mm	round	55	L	2092aha02h35100
			R	2092aha02h35200
		65	L	2092aYes02h35100
			R	2092aYes02h35200
		80	L	2092ama02h35100
			R	2092ama02h35200
		100	L	2092aqa02h35100
			R	2092aqa02h35200

PZ-72	Face plate	Backset		Article number
Unrebated door Face plate: 24 x 235 mm	round	55	L	2092aha02m35100
			R	2092aha02m35200
		65	L	2092aYes02m35100
			R	2092aYes02m35200
		80	L	2092ama02m35100
			R	2092ama02m35200
		100	L	2092aqa02m35100
			R	2092aqa02m35200

EN 179

EN 1125

F

Panic function E

PZ-72 W (W = handle / knob execution)	Face plate	Backset		Article number
Rebated door Face plate: 20 x 235 mm	round	55	L	2092aha02h34100
			R	2092aha02h34200
		65	L	2092aYes02h34100
			R	2092aYes02h34200
		80	L	2092ama02h34100
			R	2092ama02h34200
		100	L	2092aqa02h34100
			R	2092aqa02h34200

PZ-72 W (W = handle / knob execution)	Face plate	Backset		Article number
Unrebated door Face plate: 24 x 235 mm	round	55	L	2092aha02m34100
			R	2092aha02m34200
		65	L	2092aYes02m34100
			R	2092aYes02m34200
		80	L	2092ama02m34100
			R	2092ama02m34200
		100	L	2092aqa02m34100
			R	2092aqa02m34200

GBS 93 ■ Panic mortise lock for double-leaf fire-proof doors

Product characteristics

Lock type	PZ-72 W (W = handle / knob execution)	■
Backset	55	■
	65	■
	80	■
	100	■
Panic function	B	■
	D	■
	E	■
Face plate	Stainless steel	■
Face plate width	20	■
	24	■
Hub	9 mm	■
Suitable for the use on fire- and smoke control doors	F	■
Tested acc. EN / DIN	EN 179 / EN 1125	

■ Yes - No ◘ On request

Description

- Panic mortise lock for double leaf doors.
- Suitable for fire-protection doors
- Tested and certified acc. to **EN 179** and **EN 1125**
- Made completely of fire-resistant materials
- Extras: interrogation of dead bolt position
- Related counter lock for passive leaf: GBS 94 on page 462.

On request individual plate stamping possible at extra charge.

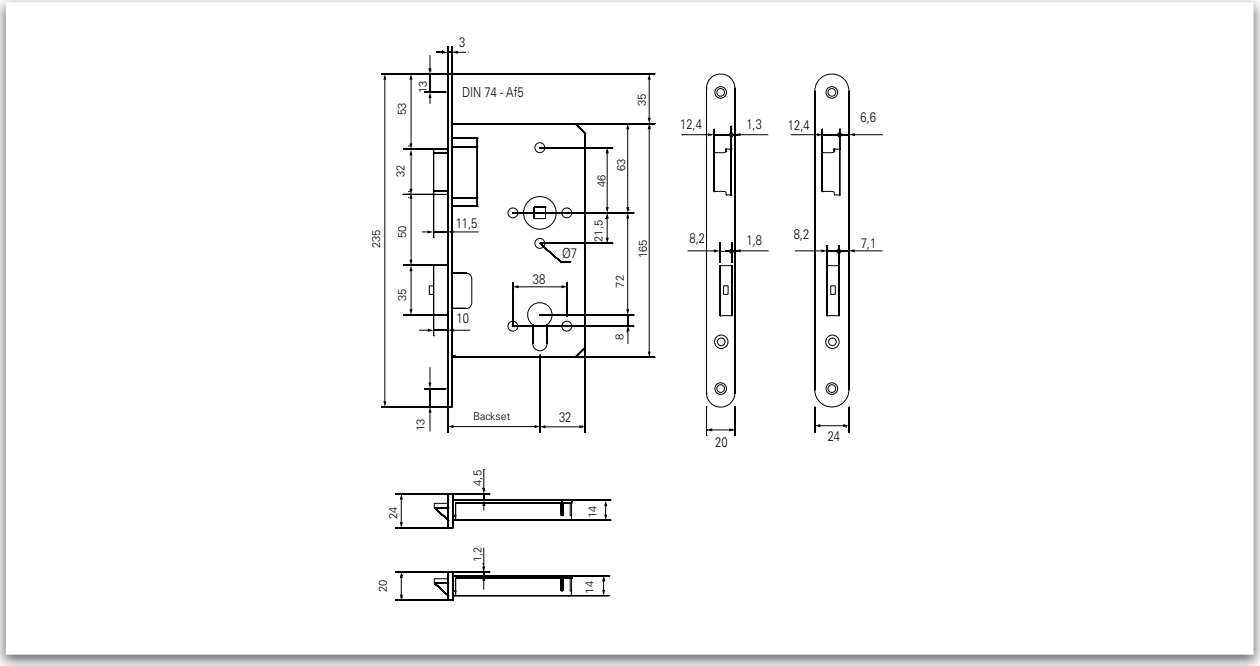

Dimensioning: GBS 93

Swissdoor ApS • Stenhuggervej 2 • 5471 Søndersø • Danmark Telefon +45 86 28 00 00 • mail@swissdoor.dk • www.swissdoor.dk

GBS 93 ■ Panic mortise lock for double-leaf fire-proof doors

EN 179
EN 1125
F

Panic function B

PZ-72	Face plate	Backset		Article number
Rebated door Face plate: 20 x 235 mm	round	55	L	2093aha02h33100
			R	2093aha02h33200
		65	L	2093aYes02h33100
			R	2093aYes02h33200
		80	L	2093ama02h33100
			R	2093ama02h33200
		100	L	2093aqa02h33100
			R	2093aqa02h33200

PZ-72	Face plate	Backset		Article number
Unrebated door Face plate: 24 x 235 mm	round	55	L	2093aha02m33100
			R	2093aha02m33200
		65	L	2093aYes02m33100
			R	2093aYes02m33200
		80	L	2093ama02m33100
			R	2093ama02m33200
		100	L	2093aqa02m33100
			R	2093aqa02m33200

EN 179
EN 1125
F

Panic function D

PZ-72	Face plate	Backset		Article number
Rebated door Face plate: 20 x 235 mm	round	55	L	2093aha02h35100
			R	2093aha02h35200
		65	L	2093aYes02h35100
			R	2093aYes02h35200
		80	L	2093ama02h35100
			R	2093ama02h35200
		100	L	2093aqa02h35100
			R	2093aqa02h35200

PZ-72	Face plate	Backset		Article number
Unrebated door Face plate: 24 x 235 mm	round	55	L	2093aha02m35100
			R	2093aha02m35200
		65	L	2093aYes02m35100
			R	2093aYes02m35200
		80	L	2093ama02m35100
			R	2093ama02m35200
		100	L	2093aqa02m35100
			R	2093aqa02m35200

EN 179
EN 1125
F

Panic function E

PZ-72 W (W = handle / knob execution)	Face plate	Backset		Article number
Rebated door Face plate: 20 x 235 mm	round	55	L	2093aha02h34100
			R	2093aha02h34200
		65	L	2093aYes02h34100
			R	2093aYes02h34200
		80	L	2093ama02h34100
			R	2093ama02h34200
		100	L	2093aqa02h34100
			R	2093aqa02h34200

PZ-72 W (W = handle / knob execution)	Face plate	Backset		Article number
Unrebated door Face plate: 24 x 235 mm	round	55	L	2093aha02m34100
			R	2093aha02m34200
		65	L	2093aYes02m34100
			R	2093aYes02m34200
		80	L	2093ama02m34100
			R	2093ama02m34200
		100	L	2093aqa02m34100
			R	2093aqa02m34200

GBS 94 ■ Panic counter lock for double leaf fire proof doors

Product characteristics		
Panic function		■
Face plate	Stainless steel	■
Face plate width	20	■
	24	■
	Face plate	■
	Angular face plate	■
	Flat face plate	■
Hub	9 mm	■
Suitable for the use on fire- and smoke control doors	F	■
Tested acc. EN / DIN	EN 179 EN 1125	

■ Yes - No ◘ On request

Description

- Panic mortise lock for double-leaf fire-proof doors
- Suitable for fire-protection doors
- Tested and certified acc. to **EN 179 and EN 1125**
- Made completely of fire-resistant materials
- Related lock for active leaf: GBS 93 on page 460

On request individual plate stamping possible at extra charge.

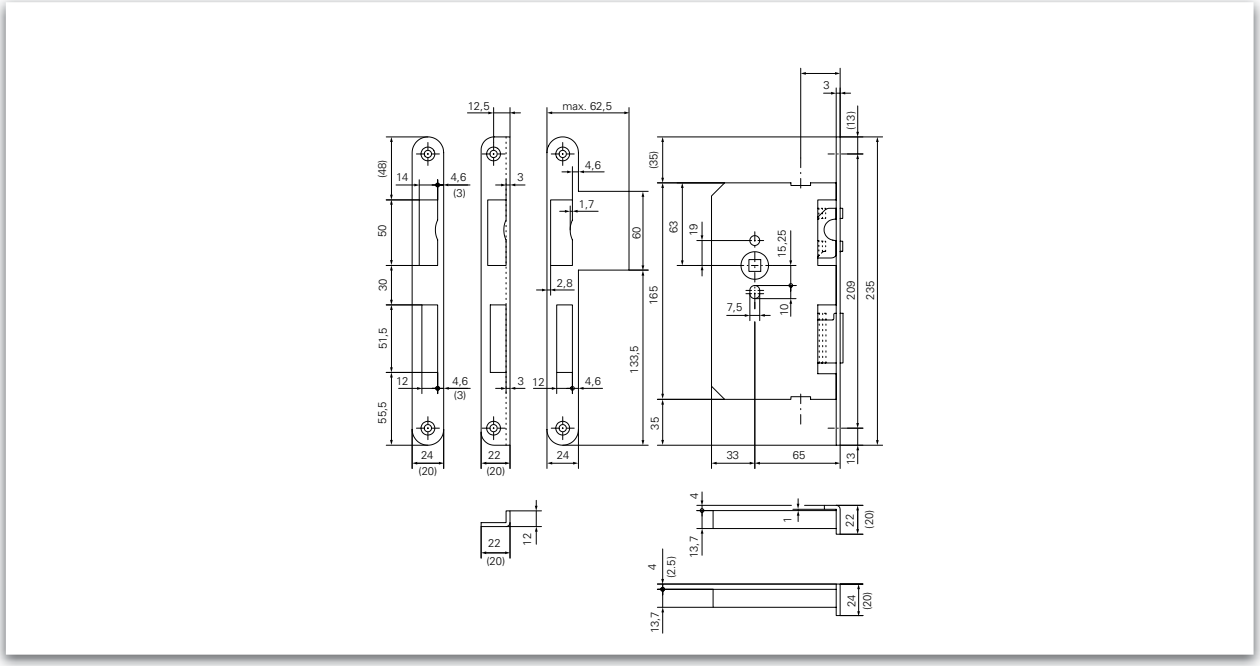

Dimensioning: GBS 94

Swissdoor ApS • Stenhuggervej 2 • 5471 Søndersø • Danmark Telefon +45 86 28 00 00 • mail@swissdoor.dk • www.swissdoor.dk

GBS 94 ■ Panic counter lock for double leaf fire proof doors

EN 179
EN 1125
F

With face plate

	Face plate	Backset	SFT		Article number
Rebated door Face plate: 20 x 235 mm	round	65	30	L	2094aYes02h31100
				R	2094aYes02h31200
		80	30	L	2094ama02h31100
				R	2094ama02h31200
		80	45	L	2094ama02v31104
				R	2094ama02v31204
		100	65	L	2094aqa02h31101
				R	2094aqa02h31201

	Face plate	Backset	SFT		Article number
Unrebated door Face plate: 24 x 235 mm	round	65	30	L	2094aYes02m31100
				R	2094aYes02m31200
		80	30	L	2094ama02m31100
				R	2094ama02m31200
		80	45	L	2094ama02m31104
				R	2094ama02m31204
		100	65	L	2094aqa02m31101
				R	2094aqa02m31201

EN 179
EN 1125
F

With angular face plate

	Face plate	Backset	SFT		Article number
Rebated door Angular face plate: 20 x 12 x 235 mm	round	65	30	L	2094aYes02v31100
				R	2094aYes02v31200
		80	30	L	2094ama02v31100
				R	2094ama02v31200
		80	45	L	2094ama02v31104
				R	2094ama02v31204
		100	65	L	2094aqa02v31100
				R	2094aqa02v31200

	Face plate	Backset	SFT		Article number
Unrebated door Angular face plate: 22 x 12 x 235 mm	round	65	30	L	2094aYes02w31100
				R	2094aYes02w31200
		80	30	L	2094ama02w31100
				R	2094ama02w31200
		80	45	L	2094ama02w31104
				R	2094ama02w31204
		100	65	L	2094aqa02w31100
				R	2094aqa02w31200

EN 179
EN 1125
F

With flat face plate

	Face plate	Backset	SFT		Article number
Rebated door Flat face plate: 20 x 12 x 235 mm max. 62,5 mm	round	65	30	L	2094aYes02x31100
				R	2094aYes02x31200
		80	30	L	2094ama02x31100
				R	2094ama02x31200
		80	45	L	2094ama02x31104
				R	2094ama02x31204
		100	65	L	2094aqa02x31100
				R	2094aqa02x31200

	Face plate	Backset	SFT		Article number
Unrebated door Flat face plate: 22 x 12 x 235 mm max. 62,5 mm	round	65	30	L	2094aYes02y31100
				R	2094aYes02y31200
		80	30	L	2094ama02y31104
				R	2094ama02y31204
		80	45	L	2094ama02y31100
				R	2094ama02y31200
		100	65	L	2094aqa02y31100
				R	2094aqa02y31200

GBS 96 ■ Panic mortise lock for fire-proof doors

Product characteristics		
Lock type	PZ-92	■
Backset	30	■
	35	■
	40	■
	45	■
Panic function	B	■
	D	■
	E	■
Face plate	Stainless steel	■
Face plate width	24	■
Hub	9 mm	■
Suitable for the use on fire- and smoke control doors	F	■
Tested acc. EN / DIN	EN 179 / EN 1125	

■ Yes - No ◘ On request

Description

- Panic mortise lock
- Suitable for fire-protection doors
- Tested and certified acc. to **EN 179 and EN 1125**
- Made completely of fire-resistant materials
- Panic function E: same version DIN left / DIN right

On request individual plate stamping possible at extra charge.

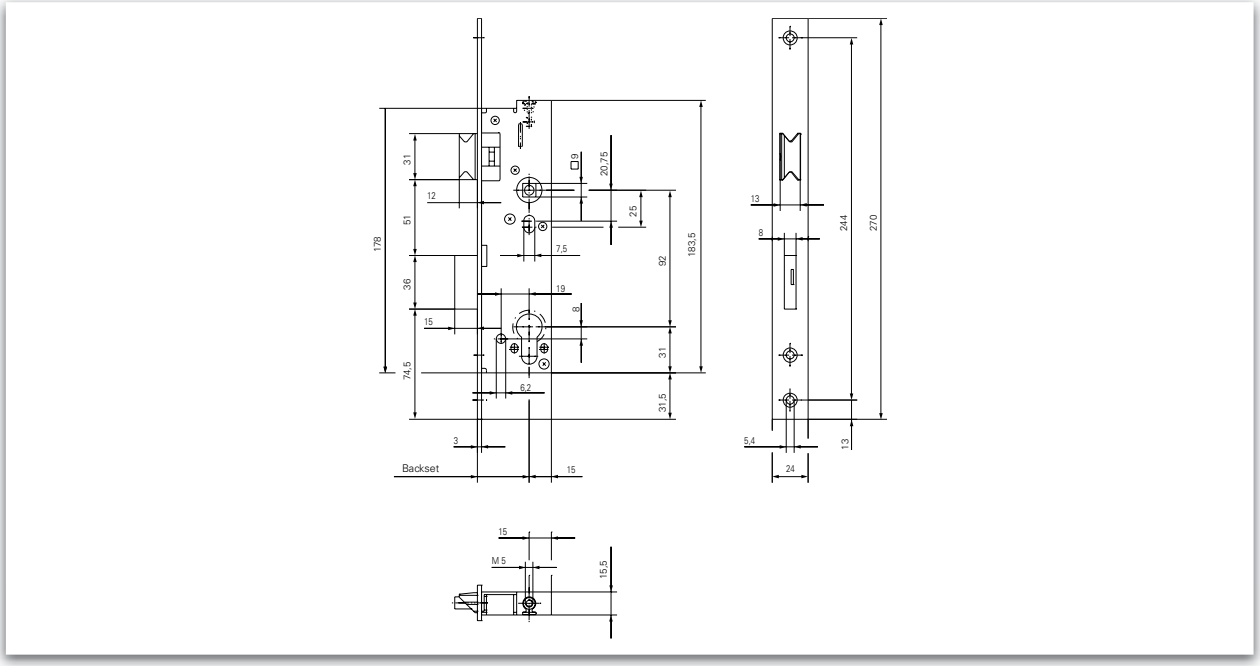

Dimensioning: GBS 96

Swissdoor ApS • Stenhuggervej 2 • 5471 Søndersø • Danmark Telefon +45 86 28 00 00 • mail@swissdoor.dk • www.swissdoor.dk

GBS 96 ■ Panic mortise lock for fire-proof doors

EN 179

EN 1125

F

Panic function B

PZ-92	Face plate	Backset		Article number
Rebated door Face plate: 24 x 270 mm	square	30	L	2096acb02q33100
			R	2096acb02q33200
		35	L	2096adb02q33100
			R	2096adb02q33200
		40	L	2096aeb02q33100
			R	2096aeb02q33200
		45	L	2096afb02q33100
			R	2096afb02q33200

EN 179

EN 1125

F

Panic function D

PZ-92	Face plate	Backset		Article number
Rebated door Face plate: 24 x 270 mm	square	30	L	2096acb02q35100
			R	2096acb02q35200
		35	L	2096adb02q35100
			R	2096adb02q35200
		40	L	2096aeb02q35100
			R	2096aeb02q35200
		45	L	2096afb02q35100
			R	2096afb02q35200

EN 179

EN 1125

F

Panic function E

PZ-92 W (W = handle / knob execution)	Face plate	Backset		Article number
Rebated door Face plate: 24 x 270 mm	square	30		2096acb02q34000
		35		2096acb02q3400
		40		2096aeb02q3400
		45		2096afb02q3400

4

GBS 97 ■ Panic mortise lock for fire-proof doors

Product characteristics		
Lock type	PZ-92	■
	RZ-94	◘
Backset	30	■
	35	■
	40	■
	45	■
Panic function	B	■
	D	■
	E	■
Face plate	Stainless steel	■
Face plate width	24	■
Hub	9 mm	■
Suitable for the use on fire- and smoke control doors	F	■
Tested acc. EN / DIN	EN 179 / EN 1125	

■ Yes - No ◘ On request

Description

- Panic mortise lock
- Suitable for fire-protection doors
- Tested and certified acc. to **EN 179** and **EN 1125**
- Made completely of fire-resistant materials
- Panic function E: same version DIN left / DIN right

On request individual plate stamping possible at extra charge.

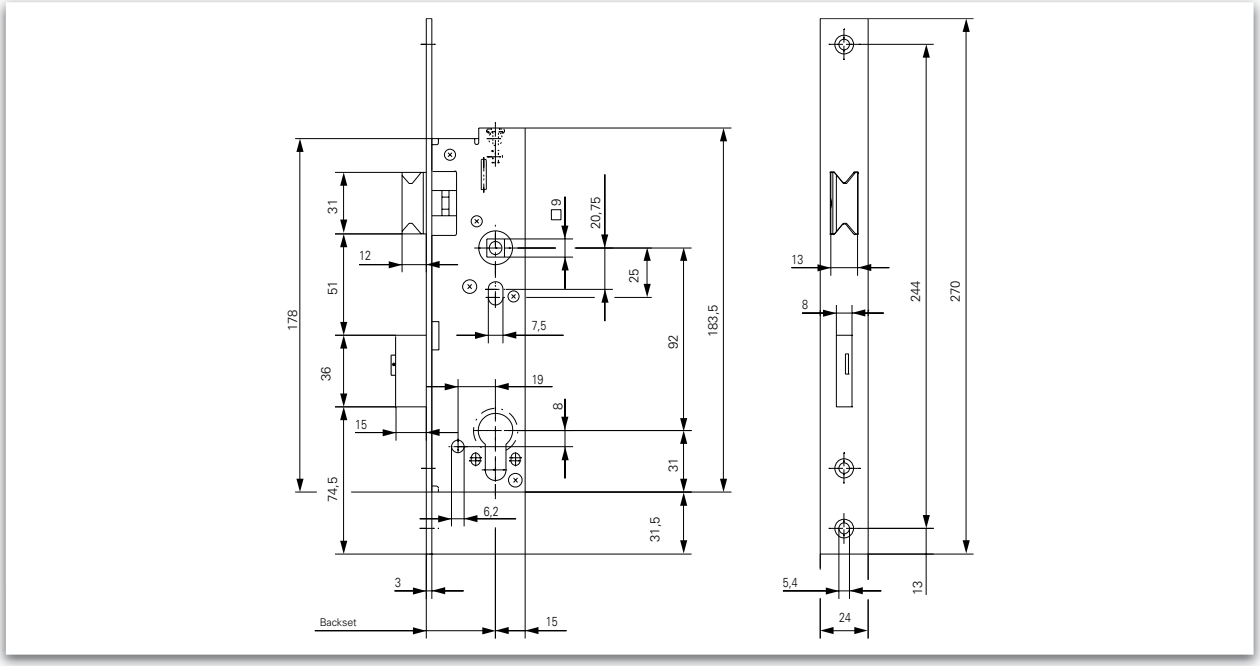

Dimensioning: GBS 97

Swissdoor ApS • Stenhuggervej 2 • 5471 Søndersø • Danmark Telefon +45 86 28 00 00 • mail@swissdoor.dk • www.swissdoor.dk

GBS 97 ■ Panic mortise lock for fire-proof doors

EN 179
EN 1125
F

Panic function B

PZ-92	Face plate	Backset		Article number
Rebated door Face plate: 24 x 270 mm	square	30	L	2097acb02q33100
			R	2097acb02q33200
		35	L	2097adb02q33100
			R	2097adb02q33200
		40	L	2097aeb02q33100
			R	2097aeb02q33200
		45	L	2097afb02q33100
			R	2097afb02q33200

EN 179
EN 1125
F

Panic function D

PZ-92	Face plate	Backset		Article number
Rebated door Face plate: 24 x 270 mm	square	30	L	2097acb02q35100
			R	2097acb02q35200
		35	L	2097adb02q35100
			R	2097adb02q35200
		40	L	2097aeb02q35100
			R	2097aeb02q35200
		45	L	2097afb02q35100
			R	2097afb02q35200

EN 179
EN 1125
F

Panic function E

PZ-92 W (W = handle / knob execution)	Face plate	Backset		Article number
Rebated door Face plate: 24 x 270 mm	square	30		2097acb02q34000
		35		2097adb02q34000
		40		2097aeb02q34000
		45		2097afb02q34000

GBS 98 ■ Panic mortise lock for fire-proof doors

Product characteristics		
Backset	40	■
	45	■
	50	■
	55	■
	60	
	65	
Panic function		■
Face plate	Stainless steel Steel zinc-plated	■ ■
Face plate width	24	■
Hub	9 mm	■
Suitable for the use on fire- and smoke control doors	F	■
Tested acc. EN / DIN	EN 179 EN 1125	

■ Yes - No ◘ On request

Description

- Panic mortise lock / passive leaf
- For double leaf fire proof doors
- Safety requirements acc. to **EN 179** and **EN 1125**
- Made completely of fire-resistant materials

On request individual plate stamping possible at extra charge.

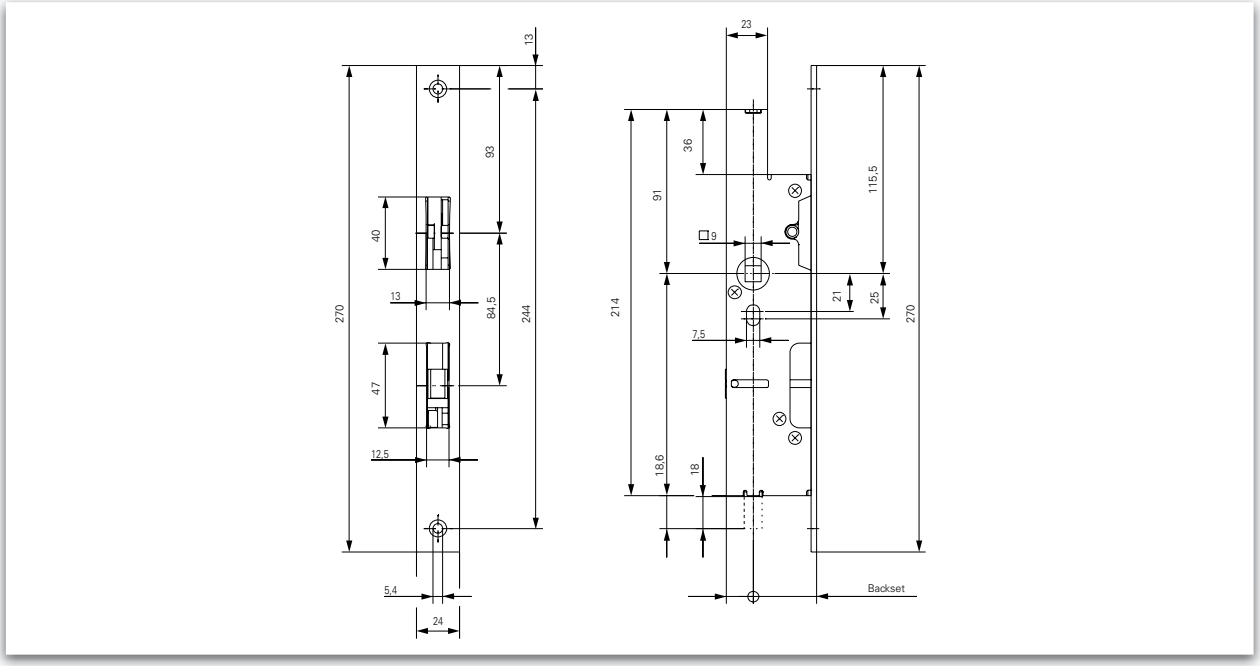

Dimensioning: GBS 98

Swissdoor ApS • Stenhuggervej 2 • 5471 Søndersø • Danmark Telefon +45 86 28 00 00 • mail@swissdoor.dk • www.swissdoor.dk

GBS 98 ■ Panic mortise lock for fire-proof doors

EN 179

EN 1125

F

	Face plate	Backset		Article number
Unrebated door Face plate: 24 x 270 mm	square	35		2098ad002q31000
		40		2098ae002q31000
		45		2098af002q31000
		50		2098ag002q31000
		55		2098ah002q31000
		60		2098ai002q31000
		65		2098aj002q31000

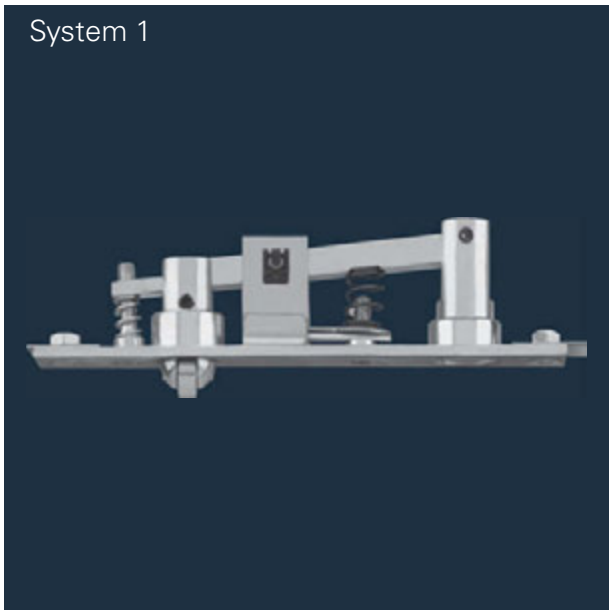

Dual locking device system 1
The passive door leaf is locked when the active door leaf is closed since the indexing bolt is pushed up, causing the locking bolt to engage in the passive door leaf.

The passive door leaf is likewise unlocked when the active door leaf is opened since the locking bolt is retracted by spring pressure. The pressure of the door closer ensures that the passive door leaf remains in closed position. Delivery includes striking plate.

Tested acc. DIN 4102, Part 18
DIN left / DIN right useable.

	Article number
Dual locking device system 1	204585500000000

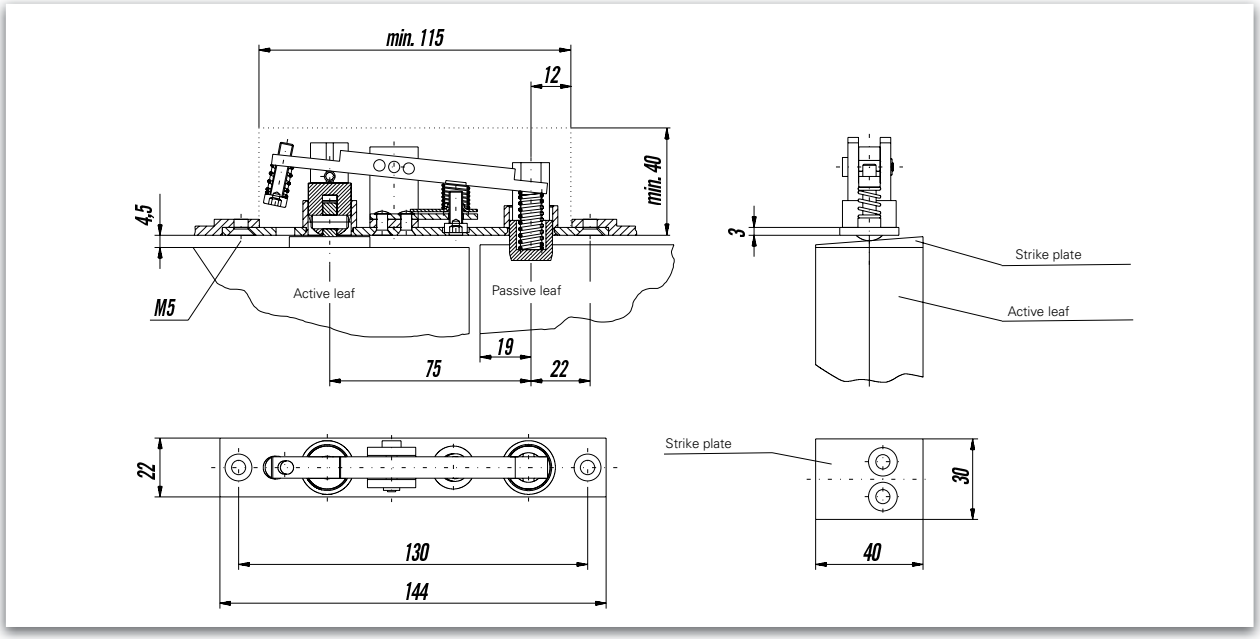

Dimensioning: Dual locking device system 1 with roller latch

The dual locking device system 1 with roller latch is also available with standard latch. Please contact us if you need this execution.

Swissdoor ApS • Stenhuggervej 2 • 5471 Søndersø • Danmark Telefon +45 86 28 00 00 • mail@swissdoor.dk • www.swissdoor.dk

Dual locking device system 2
In addition to system I the top fastening, the passive door leaf can also be locked at the bottom. A continous locking bar is built into the passive door leaf in a resilient mounting.
The locking bolt presses against the locking bar which engages in the ground, securing the passive door leaf. When the active door leaf is opened, the locking bolt is pulled back and the locking bar is in its initial position. Scope of delivery included locking bar (2.500 mm).

Tested acc. DIN 4102, Part 18
DIN left / DIN right useable.

Taking into consideration a certification with tested fire-protection doors, this system can also be used as panic locking device.

	Article number
Dual locking device system 2	204586500000000

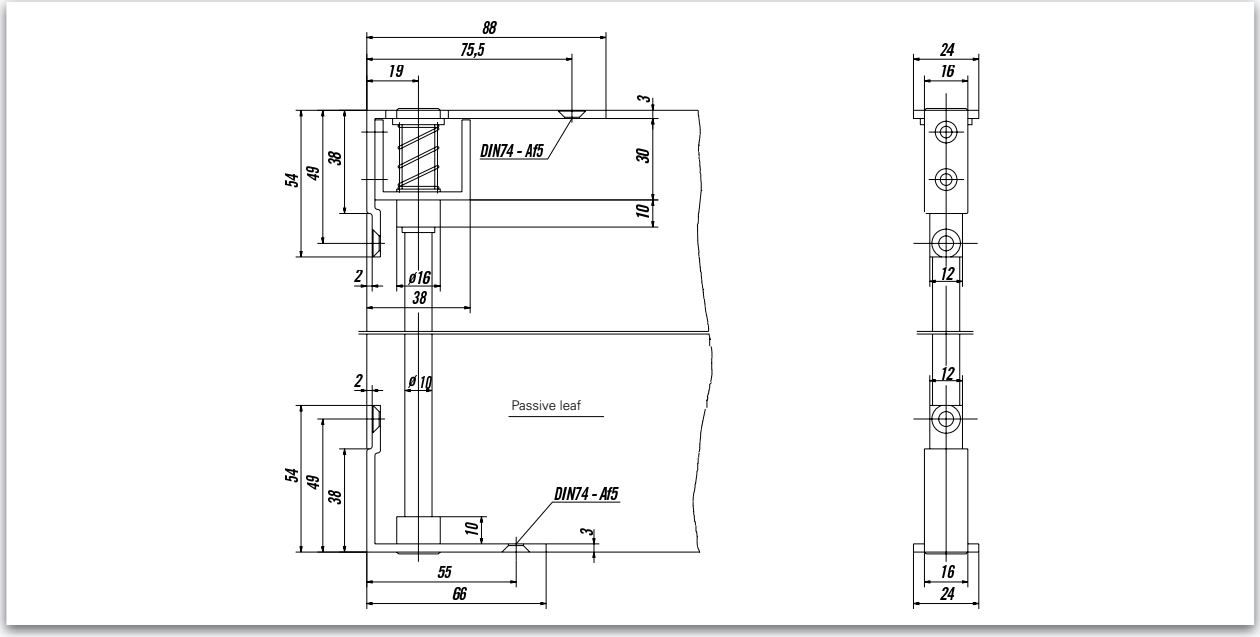

Dimensioning: Dual locking device system 2 with roller latch

The dual locking device system 2 with roller latch is also available with standard latch. Please contact us if you need this execution.

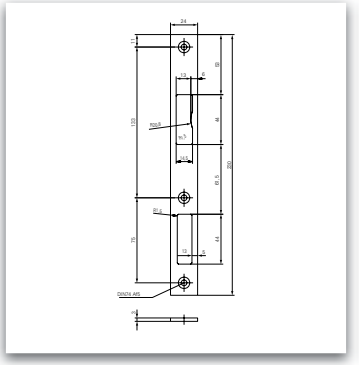

Dimensioning: Type 20

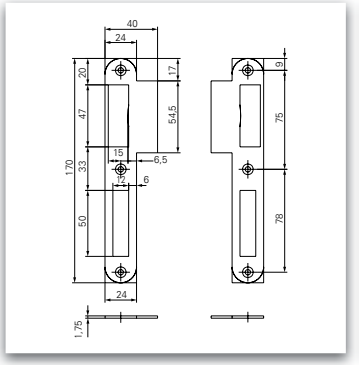

Dimensioning: Type 08

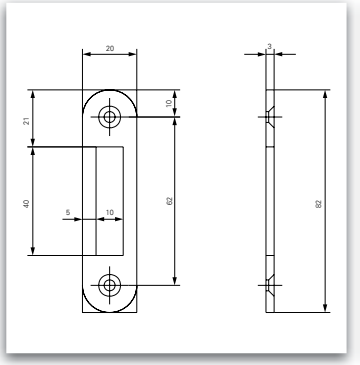

Dimensioning: Type 02

Strike plates

Type	Execution	Article number
02	square	2Z01020000ED000
08	round	2Z01080000RD000
	square	2Z01080000ED000
20	square	2Z01200000ED000

Swissdoor ApS • Stenhuggervej 2 • 5471 Søndersø • Danmark Telefon +45 86 28 00 00 • mail@swissdoor.dk • www.swissdoor.dk

Accessories ■ GBS 73

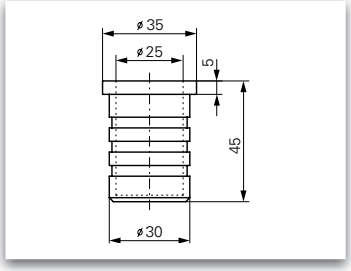

Dimensioning: 16 mm

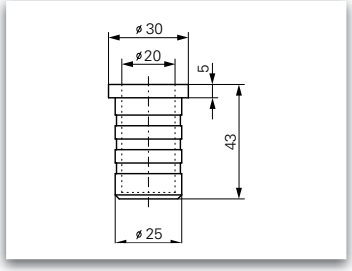

Dimensioning: 13 mm

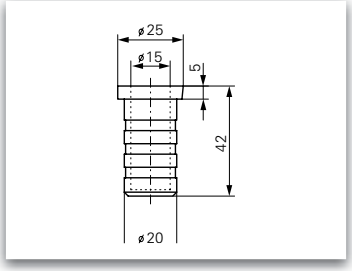

Dimensioning: 10 mm

Accessories GBS 73: Floor mould for round rods

Type	Ø	Article number
10 mm	20 mm	2Z70070
13 mm	25 mm	2Z70071
16 mm	30 mm	2Z70072

Illustration: Mould square

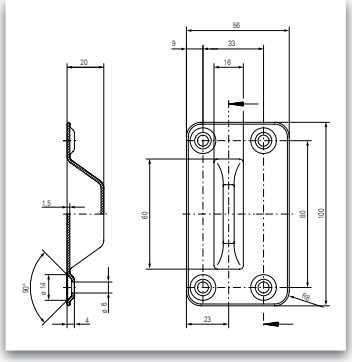

Dimensioning: Mould square

Floor mould square

Face plate	Article number
100 x 56 mm	2098003146

Illustration: Shoot bolt guide

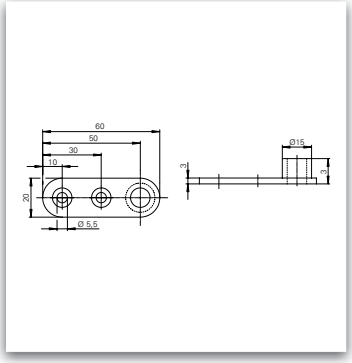

Dimensioning: Shoot bolt guide

Shoot bolt guide

Face plate	Article number
20 x 60 mm	20980106

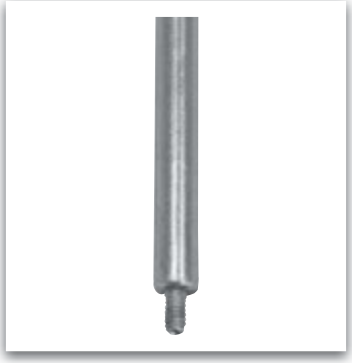

Illustration: Flush bolt

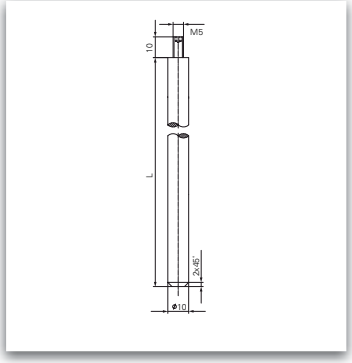

Dimensioning: Flush bolt

Flush bolt

Length in mm	Article number
1.000 mm	2Z70060
1.500 mm	2Z70061
2.000 mm	2Z70062

Swissdoor ApS • Stenhuggervej 2 • 5471 Søndersø • Danmark Telefon +45 86 28 00 00 • mail@swissdoor.dk • www.swissdoor.dk

Accessories ■ GBS 82 and GBS 83

Illustration: Strike plate

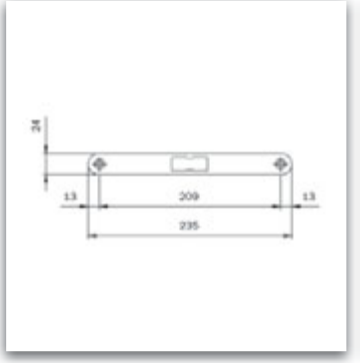

Dimensioning: Strike plate

Strike plates GBS 82 and GBS 83

Dimensions	Article number
24 x 235 x 3 mm	2082000143

Illustration: Automatic relatching device

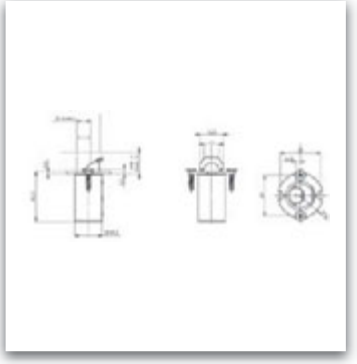

Dimensioning: Automatic relatching device

Illustration: Distance plate

Automatic relatching device GBS 84

Dimensions	Article number
Ø 29 x 36 mm	20840000

Distance plate for automatic relatching device

Dimensions (Height)	Article number
1 mm	20840001
2 mm	20840002

Illustration: Flush bolt

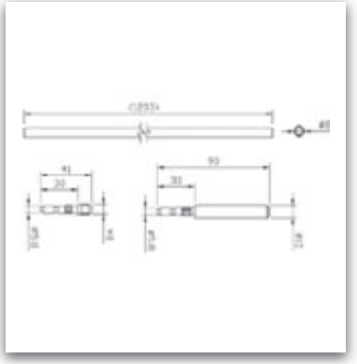

Dimensioning: Flush bolt

Flush bolt for GBS 84

Length in mm (A)	Article number
Ø 8 x 1.203 mm	20840007

Illustration: Floor strike cap square

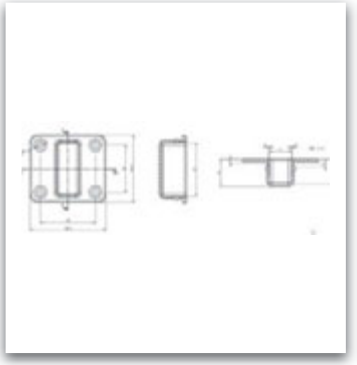

Dimensioning: Floor strike cap square

Floor strike cap square GBS 84

Dimensions	Article number
38 x 34 mm	20840003

Accessories ■ GBS 84

Illustration: Floor mould

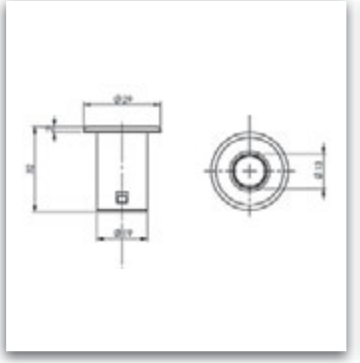

Dimensioning: Floor mould

Floor mould round for GBS 84

Face plate	Article number
20 x 60 mm	20980106

Illustration: Shoot bolt guide

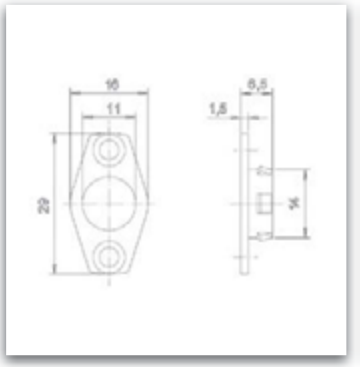

Dimension drawing: Shoot bolt guide

Illustration: Steel plate for shoot bolt guide*

Shoot bolt guide round for GBS 84

Dimensions	Article number
29 x 16 mm	20840005
	20840006*

Illustration: Switch lock

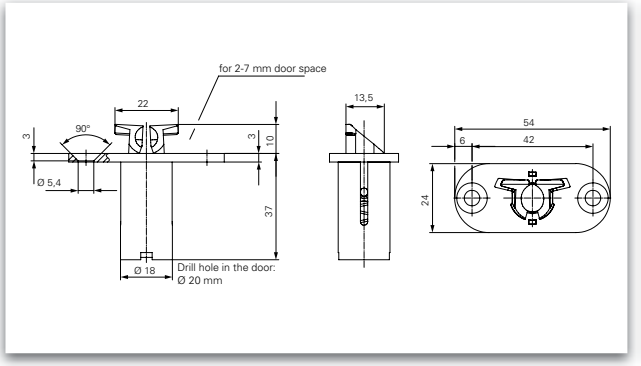

Dimensioning: Switch lock

Switch lock

Face plate	Article number
20 x 54 mm	20610220
24 x 54 mm	20610221

Illustration: Floor mould

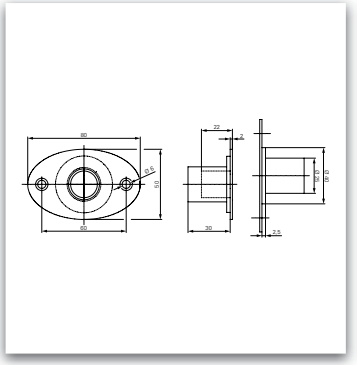

Dimensioning: Floor mould

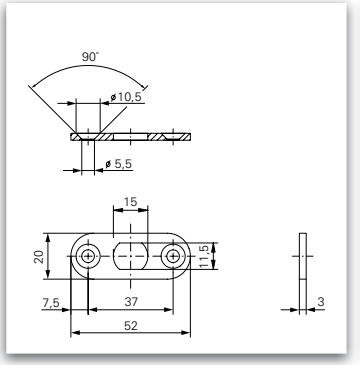

Dimensioning: Upper striking plate

Floor mould

Face plate	Article number
50 x 80 mm	20980036

Upper striking plate

Face plate	Article number
52 x 20 mm	2094080443

Illustration: Bottom shoot bolt guide

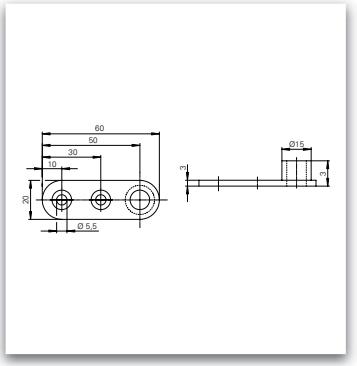

Dimensioning: Bottom shoot bolt guide

Bottom shoot bolt guide

Face plate	Article number
20 x 60 mm	20940803BVZ

Swissdoor ApS • Stenhuggervej 2 • 5471 Søndersø • Danmark Telefon +45 86 28 00 00 • mail@swissdoor.dk • www.swissdoor.dk

Accessories ■ GBS 94

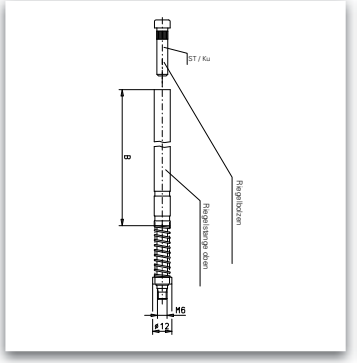

Dimensioning: Upper shoot bolt

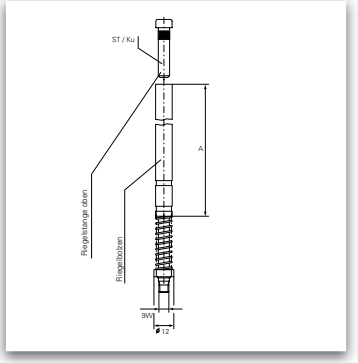

Dimensioning: Lower shoot bolt

Upper shoot bolt

Length mm (B)	Article number
1.500 mm	20940810BVZ
2.000 mm	20940814BVZ

Lower shoot bolt

Length mm (A)	Article number
1.000 mm	20940812BVZ

Accessory set GBS 94

Accessory face plate 24 mm, upper shoot bolt 1.500 mm

Content	Length mm	Face plate	Article number	Article number set
Lower shoot bolt	1.000		20940812BVZ	209405010000000
Upper shoot bolt	1.500		20940810BVZ	
Switch lock		24 x 54 mm	20610221	
Upper striking plate			2094080443	
Bottom shoot bolt guide			20940803BVZ	
Floor mould		50 x 80 mm	20980036	

Accessory face plate 24 mm, upper shoot bolt 2.000 mm

Content	Length mm	Face plate	Article number	Article number set
Lower shoot bolt	1.000		20940812BVZ	209405110000000
Upper shoot bolt	2.000		20940814BVZ	
Switch lock		24 x 54 mm	20610221	
Upper striking plate			2094080443	
Bottom shoot bolt guide			20940803BVZ	
Floor mould		50 x 80 mm	20980036	

Accessory set for face plate 20 mm for doors with up to 1.500 mm height

Content	Length mm	Face plate	Article number	Article number set
Lower shoot bolt	1.000		20940812BVZ	209405000000000
Upper shoot bolt	1.500		20940810BVZ	
Switch lock		20 x 54 mm	20610220	
Upper striking plate			2094080443	
Bottom shoot bolt guide			20940803BVZ	
Floor mould		50 x 80 mm	20980036	

Accessory face plate 20 mm, upper shoot bolt 2.000 mm

Content	Length mm	Face plate	Article number	Article number set
Lower shoot bolt	1.000		20940812BVZ	209405100000000
Upper shoot bolt	2.000		20940814BVZ	
Switch lock		20 x 54 mm	20610220	
Upper striking plate			2094080443	
Bottom shoot bolt guide			20940803BVZ	
Floor mould		50 x 80 mm	20980036	

Illustration: Switch lock

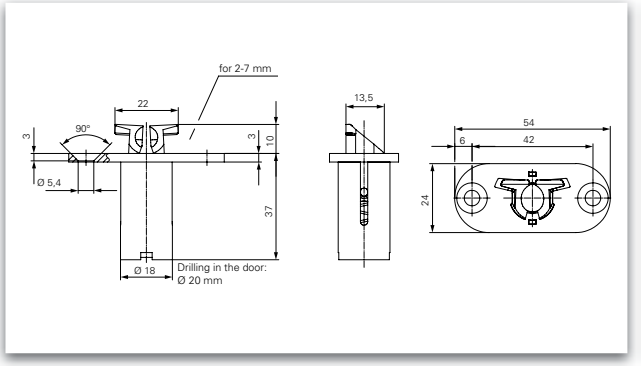

Dimensioning: Switch lock

Switch lock

Face plate	Article number
24 x 54 mm	20610221

Illustration: Floor mould

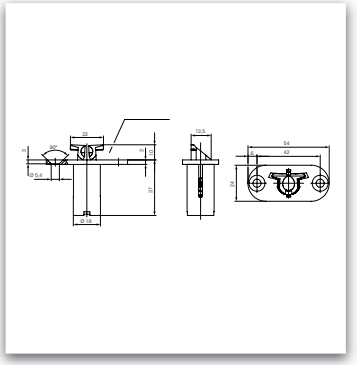

Dimensioning: Floor mould

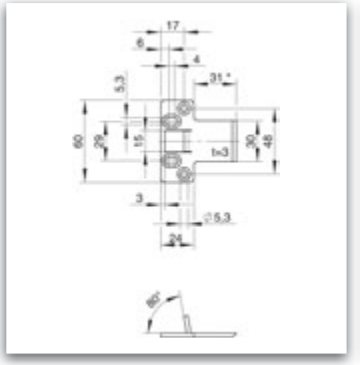

Dimensioning: Upper strike plate

Floor mould

Face plate	Article number
50 x 80 mm	20980036

Upper strike plate

Face plate	Article number
60 x 24 mm	20980105

Illustration: Bottom shoot bolt guide

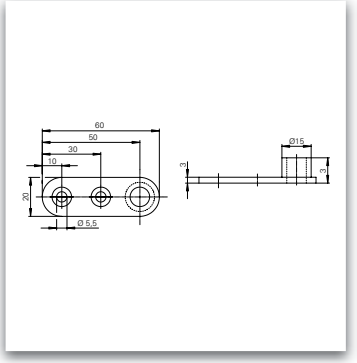

Dimensioning: Bottom shoot bolt guide

Bottom shoot bolt guide

Face plate	Article number
20 x 60 mm	20940803BVZ

Swissdoor ApS • Stenhuggervej 2 • 5471 Søndersø • Danmark Telefon +45 86 28 00 00 • mail@swissdoor.dk • www.swissdoor.dk

Accessories ■ GBS 98

Dimensioning: Upper shoot bolt

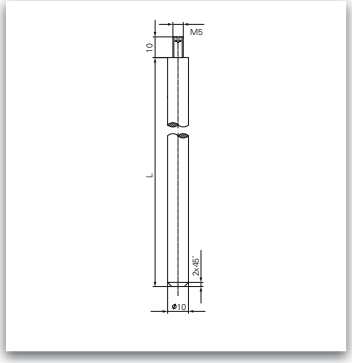

Dimensioning: Lower shoot bolt

Upper shoot bolt

Length mm	Article number
1.400 mm	20980101
1.900 mm	20980102
2.400 mm	20980111

Lower shoot bolt

Length mm	Article number
1.000 mm	20940812BVZ

4

Accessory set GBS 98

Accessory set for doors with up to 2.500 mm height

Content	Length mm	Face plate	Article number	Article number set
Lower shoot bolt	950		20980100	209805000000000
Upper shoot bolt	1.400		20980101	
Switch lock		24 x 54 mm	20610221	
Upper striking plate			20980105	
Bottom shoot bolt guide		20 x 60 mm	20980106	
Floor mould		50 x 80 mm	20980036	

Accessory set for doors with up to 3.000 mm height

Content	Length mm	Face plate	Article number	Article number set
Lower shoot bolt	950		20980100	209805100000000
Upper shoot bolt	1.900		20980102	
Switch lock		24 x 54 mm	20610221	
Upper striking plate			20980105	
Bottom shoot bolt guide		20 x 60 mm	20980106	
Floor mould		50 x 80 mm	20980036	

Accessory set for doors with up to 3500 mm height

Content	Length mm	Face plate	Article number	Article number set
Lower shoot bolt	950		20980100	209805200000000
Upper shoot bolt	2.400		20980111	
Switch lock		24 x 54 mm	20610221	
Upper striking plate			20980105	
Bottom shoot bolt guide		20 x 60 mm	20980106	
Floor mould		50 x 80 mm	20980036	

Combination for panic doors PE 2.2PB ■ For double-leaf wooden & metal doors

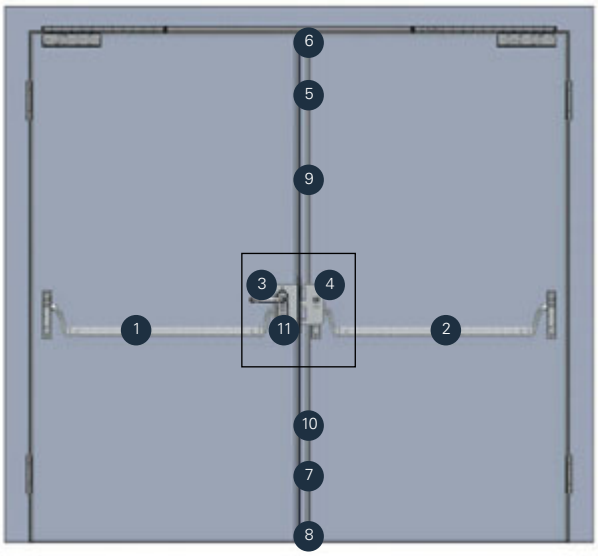

Recommended use		
Doors / Tests	Panic set acc EN 1125	■
	Suitable for fire- and smoke control doors F	■
	CE tested CE	■
Application recommended for:	Doors in escape ways	■
	Residential homes for the elderly	■
	Factory doors	■
	Museums	■
	Airports	■
	Stadiums and arenas	■

■ Yes - No

No.	Components	Page*
1	EPN 900 II / EPN 900 III GF, max. door width 1.320 mm	408 / 412
2	EPN 900 II / EPN 900 III SF, max. door width 1.320 mm	408 / 412
3	GBS 93 GF, backset: 55, 65, 80, 100 mm	460
4	GBS 94 SF, backset: 65, 80, 100 mm	462
5	Switch lock	478
6	Striking plate	
7	Shoot bolt guide	
8	Floor mould	
9	Upper shoot bolt	
10	Lower shoot bolt	
11	Counter hardware	204
	Spindles	514

The sole use of ECO panic systems presents only part of the safety. The complete safety is the result of the co-operation between ECO panic systems as well as ECO doors closers and project hinges (chapter 2 and 5 of this catalouge or our price list).

* Further information regarding the single components can be found on the mentioned pages.

1. Position	2. Position	3. Position	4. Position	5. Position
PE	**2.**	**2**	**P**	**B**
Panic Exit	Double leaf	Panic	Pushbar	PAF-B

1. Position		
PE	Panic Exit	EN 1125
PPE	Profile Panic Exit	EN 1125
EE	Emergency Exit	EN 179
PEE	Profile Emergency Exit	EN 179
2. Position		
1	Single leaf	
2	Double leaf	
3. Position		
1	Active leaf panic	
2	Active- and passive leaf panic	
4. Position		
P	Pushbar (EPN 900 II / EPN 900 III	
T	Touchbar (EPN 2000 / EPN 2000 II)	
H	Handle set (lever / knob)	
5. Position		
B	Panic function B - Key operated spring bolt change (external)	
D	Panic function D - Transit function (external)	
E	Panic function E - (W=handle/knob execution)	

Swissdoor ApS • Stenhuggervej 2 • 5471 Søndersø • Danmark Telefon +45 86 28 00 00 • mail@swissdoor.dk • www.swissdoor.dk

Combination for panic doors PE 2.PD ■ For double-leaf wooden & metal doors

Recommended use		
Doors / Tests	Panic set acc EN 1125	■
	Suitable for fire- and smoke control doors F	■
	CE tested CE	■
Application recommended for:	Doors in escape ways	■
	Residential homes for the elderly	■
	Factory doors	■
	Museums	■
	Airports	■
	Stadiums and arenas	■

■ Yes - No

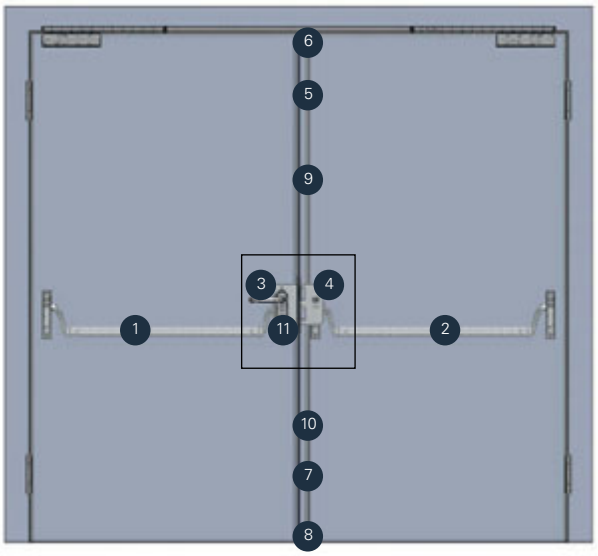

No.	Components	Page*
1	EPN 900 II / EPN 900 III GF, max. door width 1.320 mm	408 / 412
2	EPN 900 II / EPN 900 III SF, max. door width 1.320 mm	408 / 412
3	GBS 93 GF, backset: 55, 65, 80, 100 mm	460
4	GBS 94 SF, backset: 65, 80, 100 mm	462
5	Switch lock	478
6	Striking plate	
7	Shoot bolt guide	
8	Floor mould	
9	Upper shoot bolt	
10	Lower shoot bolt	
11	Counter hardware	204
	Spindles	514

PE	2.	2	P	D
Panic Exit	Double leaf	Panic	Pushbar	PAF-D

The sole use of ECO panic systems presents only part of the safety. The complete safety is the result of the co-operation between ECO panic systems as well as ECO doors closers and project hinges (chapter 2 and 5 of this catalouge or our price list).

* Further information regarding the single components can be found on the mentioned pages.

Combination for panic doors PE 2.PE ■ For double-leaf wooden & metal doors

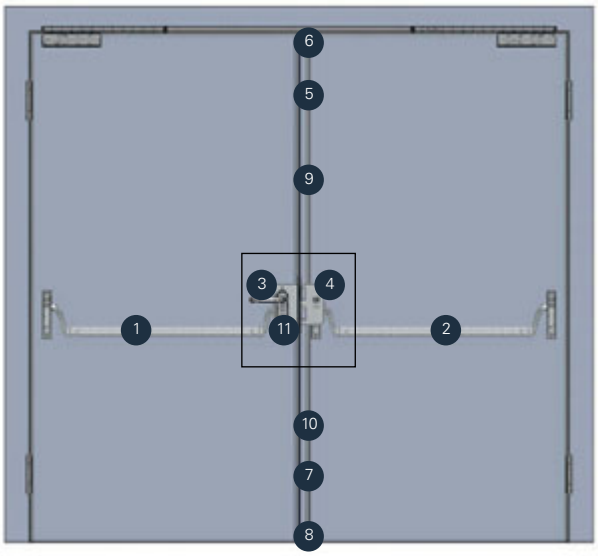

Recommended use		
Doors / Tests	Panic set acc EN 1125	■
	Suitable for fire- and smoke control doors F	■
	CE tested CE	■
Application recommended for:	Doors in escape ways	■
	Residential homes for the elderly	■
	Factory doors	■
	Museums	■
	Airports	■
	Stadiums and arenas	■

■ Yes - No

No.	Components	Page*
1	EPN 900 II / EPN 900 III GF, max. door width 1.320 mm	408 / 412
2	EPN 900 II / EPN 900 III SF, max. door width 1.320 mm	408 / 412
3	GBS 93 GF, backset: 55, 65, 80, 100 mm	460
4	GBS 94 SF, backset: 65, 80, 100 mm	462
5	Switch lock	478
6	Striking plate	
7	Shoot bolt guide	
8	Floor mould	
9	Upper shoot bolt	
10	Lower shoot bolt	
11	Counter hardware	204
	Spindles	514

The sole use of ECO panic systems presents only part of the safety. The complete safety is the result of the co-operation between ECO panic systems as well as ECO doors closers and project hinges (chapter 2 and 5 of this catalouge or our price list).

* Further information regarding the single components can be found on the mentioned pages.

1. Position	2. Position	3. Position	4. Position	5. Position
PE	**2.**	**2**	**P**	**E**
Panic Exit	Double leaf	Panic	Pushbar	PAF-E

1. Position		
PE	Panic Exit	EN 1125
PPE	Profile Panic Exit	EN 1125
EE	Emergency Exit	EN 179
PEE	Profile Emergency Exit	EN 179
2. Position		
1	Single leaf	
2	Double leaf	
3. Position		
1	Active leaf panic	
2	Active- and passive leaf panic	
4. Position		
P	Pushbar (EPN 900 II / EPN 900 III	
T	Touchbar (EPN 2000 / EPN 2000 II)	
H	Handle set (lever / knob)	
5. Position		
B	Panic function B - Key operated spring bolt change (external)	
D	Panic function D - Transit function (external)	
E	Panic function E - (W=handle/knob execution)	

Swissdoor ApS • Stenhuggervej 2 • 5471 Søndersø • Danmark Telefon +45 86 28 00 00 • mail@swissdoor.dk • www.swissdoor.dk

Combination for panic doors PE 2.2TB ■ For double-leaf wooden & metal doors

Recommended use		
Doors / Tests	Panic set acc EN 1125	■
	Suitable for fire- and smoke control doors F	■
	CE tested CE	■
Application recommended for:	Doors in escape ways	■
	Residential homes for the elderly	■
	Factory doors	■
	Museums	■
	Airports	■
	Stadiums and arenas	■

■ Yes - No

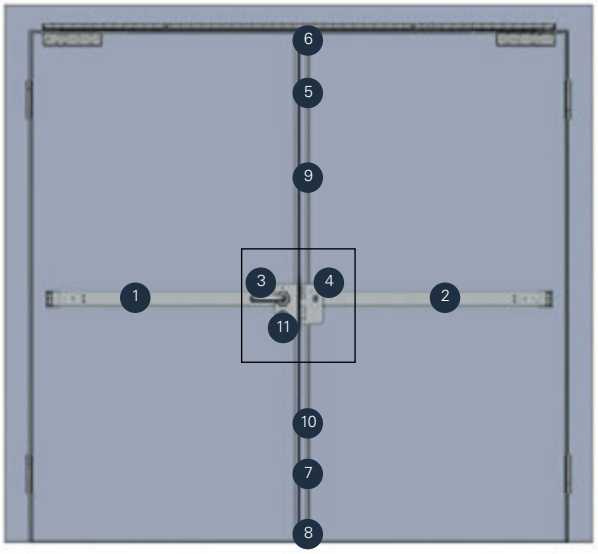

No.	Components	Page*
1	EPN 2000 / EPN 2000 II, DS GF, max. door width 1.320 mm	394 / 401
2	EPN 2000 / EPN 2000 II, DS SF, max. door width 1.320 mm	394 / 401
3	GBS 93 GF, backset: 55, 65, 80, 100 mm	460
4	GBS 94 SF, backset: 65, 80, 100 mm	462
5	Switch lock	478
6	Striking plate	
7	Shoot bolt guide	
8	Floor mould	
9	Upper shoot bolt	
10	Lower shoot bolt	
11	Counter hardware	200
	Spindles	514

PE	2.	2	T	B
Panic Exit	Double leaf	Panic	Touchbar	PAF-B

The sole use of ECO panic systems presents only part of the safety. The complete safety is the result of the co-operation between ECO panic systems as well as ECO doors closers and project hinges (chapter 2 and 5 of this catalouge or our price list).

* Further information regarding the single components can be found on the mentioned pages.

Combination for panic doors PE 2.2TD ■ For double-leaf wooden & metal doors

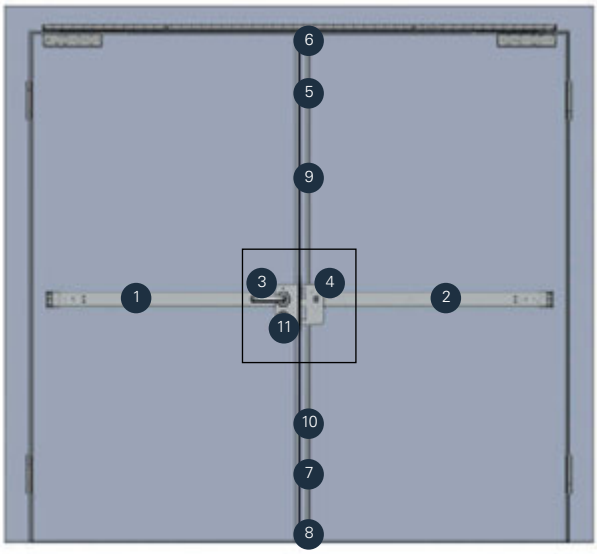

Recommended use

Doors / Tests	Panic set acc EN 1125	■
	Suitable for fire- and smoke control doors F	■
	CE tested CE	■
Application recommended for:	Doors in escape ways	■
	Residential homes for the elderly	■
	Factory doors	■
	Museums	■
	Airports	■
	Stadiums and arenas	■

■ Yes - No

No.	Components	Page*
1	EPN 2000 / EPN 2000 II, DS GF, max. door width 1.320 mm	394 / 401
2	EPN 2000 / EPN 2000 II, DS SF, max. door width 1.320 mm	394 / 401
3	GBS 93 GF, backset: 55, 65, 80, 100 mm	460
4	GBS 94 SF, backset: 65, 80, 100 mm	462
5	Switch lock	478
6	Striking plate	
7	Shoot bolt guide	
8	Floor mould	
9	Upper shoot bolt	
10	Lower shoot bolt	
11	Counter hardware	200
	Spindles	514

The sole use of ECO panic systems presents only part of the safety. The complete safety is the result of the co-operation between ECO panic systems as well as ECO doors closers and project hinges (chapter 2 and 5 of this catalouge or our price list).

* Further information regarding the single components can be found on the mentioned pages.

1. Position	2. Position	3. Position	4. Position	5. Position
PE	**2.**	**2**	**T**	**D**
Panic Exit	Double leaf	Panic	Touchbar	PAF-D

1. Position		
PE	Panic Exit	EN 1125
PPE	Profile Panic Exit	EN 1125
EE	Emergency Exit	EN 179
PEE	Profile Emergency Exit	EN 179
2. Position		
1	Single leaf	
2	Double leaf	
3. Position		
1	Active leaf panic	
2	Active- and passive leaf panic	
4. Position		
P	Pushbar (EPN 900 II / EPN 900 III	
T	Touchbar (EPN 2000 / EPN 2000 II)	
H	Handle set (lever / knob)	
5. Position		
B	Panic function B - Key operated spring bolt change (external)	
D	Panic function D - Transit function (external)	
E	Panic function E - (W=handle/knob execution)	

Swissdoor ApS • Stenhuggervej 2 • 5471 Søndersø • Danmark Telefon +45 86 28 00 00 • mail@swissdoor.dk • www.swissdoor.dk

Combination for panic doors PE 2.2TE ■ For double-leaf wooden & metal doors

Recommended use		
Doors / Tests	Panic set acc EN 1125	■
	Suitable for fire- and smoke control doors F	■
	CE tested CE	■
Application recommended for:	Doors in escape ways	■
	Residential homes for the elderly	■
	Factory doors	■
	Museums	■
	Airports	■
	Stadiums and arenas	■

■ Yes - No

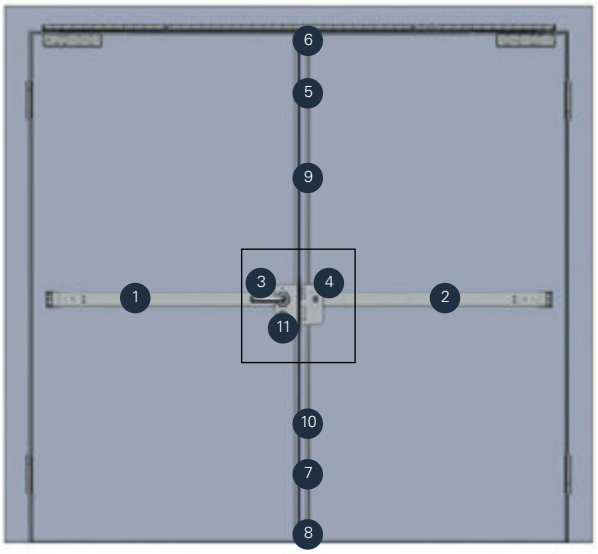

No.	Components	Page*
1	EPN 2000 / EPN 2000 II, DS GF, max. door width 1.320 mm	394 / 401
2	EPN 2000 / EPN 2000 II, DS SF, max. door width 1.320 mm	394 / 401
3	GBS 93 GF, backset: 55, 65, 80, 100 mm	460
4	GBS 94 SF, backset: 65, 80, 100 mm	462
5	Switch lock	478
6	Striking plate	
7	Shoot bolt guide	
8	Floor mould	
9	Upper shoot bolt	
10	Lower shoot bolt	
11	Counter hardware	200
	Spindles	514

PE	2.	2	T	E
Panic Exit	Double leaf	Panic	Touchbar	PAF-E

The sole use of ECO panic systems presents only part of the safety. The complete safety is the result of the co-operation between ECO panic systems as well as ECO doors closers and project hinges (chapter 2 and 5 of this catalouge or our price list).

* Further information regarding the single components can be found on the mentioned pages.

Combination for panic doors PE 1.1PB ■ For single-leaf wooden & metal doors

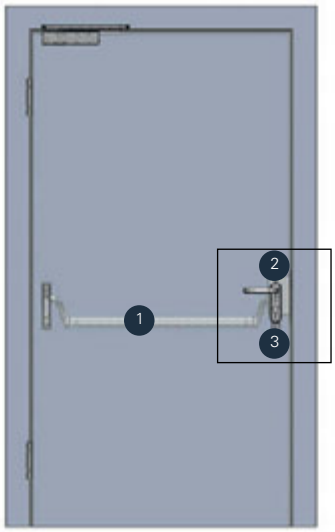

Recommended use		
Doors / Tests	Panic set acc EN 1125	■
	Suitable for fire- and smoke control doors F	■
	CE tested CE	■
Application recommended for:	Doors in escape ways	■
	Residential homes for the elderly	■
	Factory doors	■
	Museums	■
	Airports	■
	Stadiums and arenas	■

■ Yes - No

No.	Components	Page*
1	EPN 900 II / EPN 900 III, max. door width 1.320 mm	408 / 412
2	GBS 92, backset: 55, 65, 80, 100 mm	458
3	Counter hardware	204
	Spindle	514

1. Position	2. Position	3. Position	4. Position	5. Position
PE	**1.**	**1**	**P**	**B**
Panic Exit	Single leaf	Panic	Pushbar	PAF-B

1. Position		
PE	Panic Exit	EN 1125
PPE	Profile Panic Exit	EN 1125
EE	Emergency Exit	EN 179
PEE	Profile Emergency Exit	EN 179
2. Position		
1	Single leaf	
2	Double leaf	
3. Position		
1	Active leaf panic	
2	Active- and passive leaf panic	
4. Position		
P	Pushbar (EPN 900 II / EPN 900 III	
T	Touchbar (EPN 2000 / EPN 2000 II)	
H	Handle set (lever / knob)	
5. Position		
B	Panic function B - Key operated spring bolt change (external)	
D	Panic function D - Transit function (external)	
E	Panic function E - (W=handle/knob execution)	

The sole use of ECO panic systems presents only part of the safety. The complete safety is the result of the co-operation between ECO panic systems as well as ECO doors closers and project hinges (chapter 2 and 5 of this catalouge or our price list).

* Further information regarding the single components can be found on the mentioned pages.

Swissdoor ApS • Stenhuggervej 2 • 5471 Søndersø • Danmark Telefon +45 86 28 00 00 • mail@swissdoor.dk • www.swissdoor.dk

Combination for panic doors PE 1.1PD ■ For single-leaf wooden & metal doors

Recommended use		
Doors / Tests	Panic set acc EN 1125	■
	Suitable for fire- and smoke control doors F	■
	CE tested CE	■
Application recommended for:	Doors in escape ways	■
	Residential homes for the elderly	■
	Factory doors	■
	Museums	■
	Airports	■
	Stadiums and arenas	■

■ Yes - No

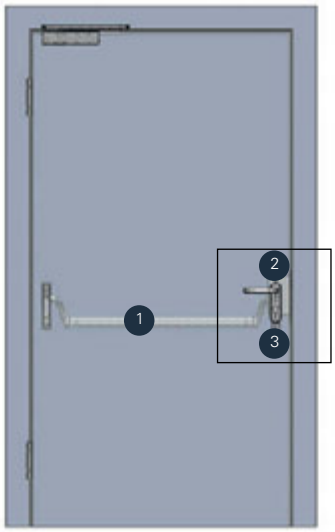

No.	Components	Page*
1	EPN 900 II / EPN 900 III, max. door width 1.320 mm	408 / 412
2	GBS 92, backset: 55, 65, 80, 100 mm	458
3	Counter hardware	204
	Spindle	514

PE	1.	1	P	D
Panic Exit	Single leaf	Panic	Pushbar	PAF-D

The sole use of ECO panic systems presents only part of the safety. The complete safety is the result of the co-operation between ECO panic systems as well as ECO doors closers and project hinges (chapter 2 and 5 of this catalouge or our price list).

* Further information regarding the single components can be found on the mentioned pages.

Combination for panic doors PE 1.1PE ■ For single-leaf wooden & metal doors

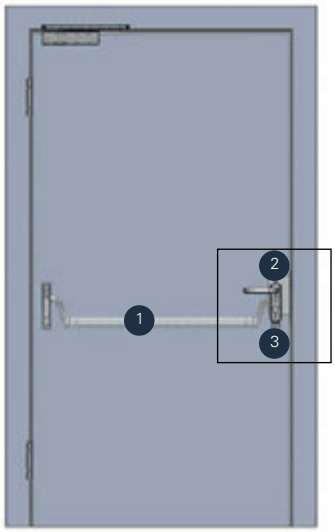

Recommended use		
Doors / Tests	Panic set acc EN 1125	■
	Suitable for fire- and smoke control doors F	■
	CE tested CE	■
Application recommended for:	Doors in escape ways	■
	Residential homes for the elderly	■
	Factory doors	■
	Museums	■
	Airports	■
	Stadiums and arenas	■

■ Yes - No

No.	Components	Page*
1	EPN 900 II / EPN 900 III, max. door width 1.320 mm	408 / 412
2	GBS 92, backset: 55, 65, 80, 100 mm	458
3	Counter hardware	204
	Spindle	514

1. Position	2. Position	3. Position	4. Position	5. Position
PE	**1.**	**1**	**P**	**E**
Panic Exit	Single leaf	Panic	Pushbar	PAF-E

1. Position		
PE	Panic Exit	EN 1125
PPE	Profile Panic Exit	EN 1125
EE	Emergency Exit	EN 179
PEE	Profile Emergency Exit	EN 179
2. Position		
1	Single leaf	
2	Double leaf	
3. Position		
1	Active leaf panic	
2	Active- and passive leaf panic	
4. Position		
P	Pushbar (EPN 900 II / EPN 900 III	
T	Touchbar (EPN 2000 / EPN 2000 II)	
H	Handle set (lever / knob)	
5. Position		
B	Panic function B - Key operated spring bolt change (external)	
D	Panic function D - Transit function (external)	
E	Panic function E - (W=handle/knob execution)	

The sole use of ECO panic systems presents only part of the safety. The complete safety is the result of the co-operation between ECO panic systems as well as ECO doors closers and project hinges (chapter 2 and 5 of this catalouge or our price list).

* Further information regarding the single components can be found on the mentioned pages.

Swissdoor ApS • Stenhuggervej 2 • 5471 Søndersø • Danmark Telefon +45 86 28 00 00 • mail@swissdoor.dk • www.swissdoor.dk

Combination for panic doors PE 1.1TB ■ For single-leaf wooden & metal doors

Recommended use		
Doors / Tests	Panic set acc EN 1125	■
	Suitable for fire- and smoke control doors F	■
	CE tested CE	■
Application recommended for:	Doors in escape ways	■
	Residential homes for the elderly	■
	Factory doors	■
	Museums	■
	Airports	■
	Stadiums and arenas	■

■ Yes - No

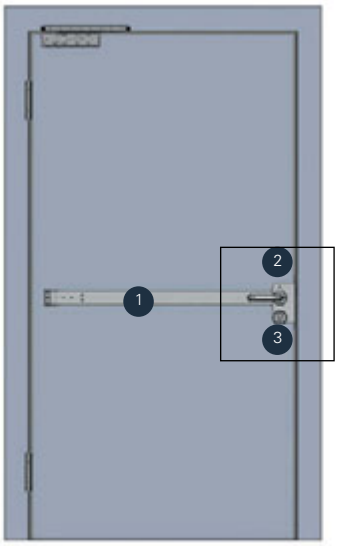

No.	Components	Page*
1	EPN 2000 / EPN 2000 II, DS, max. door width 1.300 mm	394 / 401
2	GBS 92, backset: 55, 65, 80, 100 mm	458
3	Counter hardware	200
	Spindle	514

PE	1.	1	T	B
Panic Exit	Single leaf	Panic	Touchbar	PAF-B

The sole use of ECO panic systems presents only part of the safety. The complete safety is the result of the co-operation between ECO panic systems as well as ECO doors closers and project hinges (chapter 2 and 5 of this catalouge or our price list).

* Further information regarding the single components can be found on the mentioned pages.

Combination for panic doors PE 1.1TD ■ For single-leaf wooden & metal doors

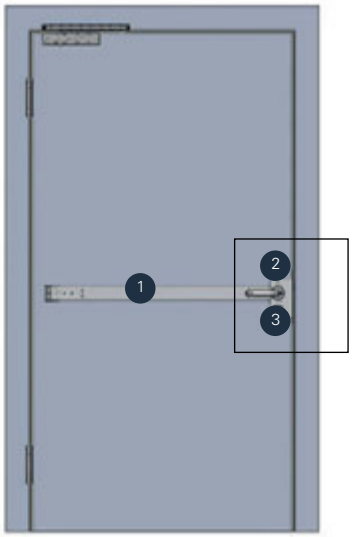

Recommended use		
Doors / Tests	Panic set acc EN 1125	■
	Suitable for fire- and smoke control doors F	■
	CE tested CE	■
Application recommended for:	Doors in escape ways	■
	Residential homes for the elderly	■
	Factory doors	■
	Museums	■
	Airports	■
	Stadiums and arenas	■

■ Yes - No

No.	Components	Page*
1	EPN 2000 / EPN 2000 IIDS, max. door width 1.320 mm	394 / 401
2	GBS 92, backset: 55, 65, 80, 100 mm	458
3	Counter hardware	200
	Spindle	514

1. Position	2. Position	3. Position	4. Position	5. Position
PE	**1.**	**1**	**T**	**D**
Panic Exit	Single leaf	Panic	Touchbar	PAF-D

1. Position		
PE	Panic Exit	EN 1125
PPE	Profile Panic Exit	EN 1125
EE	Emergency Exit	EN 179
PEE	Profile Emergency Exit	EN 179
2. Position		
1	Single leaf	
2	Double leaf	
3. Position		
1	Active leaf panic	
2	Active- and passive leaf panic	
4. Position		
P	Pushbar (EPN 900 II / EPN 900 III	
T	Touchbar (EPN 2000 / EPN 2000 II)	
H	Handle set (lever / knob)	
5. Position		
B	Panic function B - Key operated spring bolt change (external)	
D	Panic function D - Transit function (external)	
E	Panic function E - (W=handle/knob execution)	

The sole use of ECO panic systems presents only part of the safety. The complete safety is the result of the co-operation between ECO panic systems as well as ECO doors closers and project hinges (chapter 2 and 5 of this catalouge or our price list).

* Further information regarding the single components can be found on the mentioned pages.

Swissdoor ApS • Stenhuggervej 2 • 5471 Søndersø • Danmark Telefon +45 86 28 00 00 • mail@swissdoor.dk • www.swissdoor.dk

Combination for panic doors PE 1.1TE ■ For single-leaf wooden & metal doors

Recommended use		
Doors / Tests	Panic set acc EN 1125	■
	Suitable for fire- and smoke control doors F	■
	CE tested CE	■
Application recommended for:	Doors in escape ways	■
	Residential homes for the elderly	■
	Factory doors	■
	Museums	■
	Airports	■
	Stadiums and arenas	■

■ Yes - No

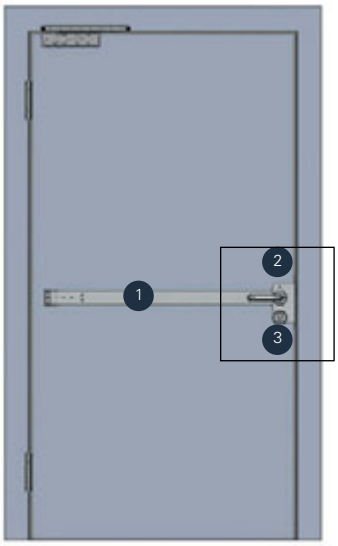

No.	Components	Page*
1	EPN 2000 / EPN 2000 IIDS, max. door width 1.320 mm	394 / 401
2	GBS 92, backset: 55, 65, 80, 100 mm	458
3	Counter hardware	200
	Spindle	514

PE	1.	1	T	E
Panic Exit	Single leaf	Panic	Touchbar	PAF-E

The sole use of ECO panic systems presents only part of the safety. The complete safety is the result of the co-operation between ECO panic systems as well as ECO doors closers and project hinges (chapter 2 and 5 of this catalouge or our price list).

* Further information regarding the single components can be found on the mentioned pages.

Combination for panic doors PPE 2.2PB ■ For double-leaf profile frame doors

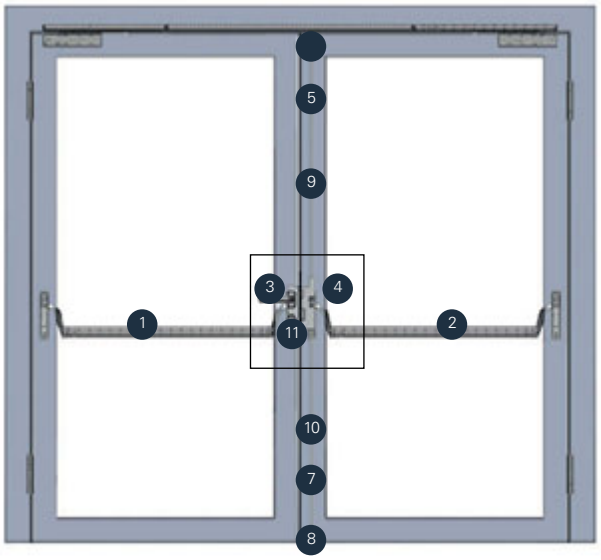

Recommended use

Doors / Tests	Panic set acc EN 1125	■
	Suitable for fire- and smoke control doors F	■
	CE tested CE	■
Application recommended for:	Doors in escape ways	■
	Residential homes for the elderly	■
	Factory doors	■
	Museums	■
	Airports	■
	Stadiums and arenas	■

■ Yes - No

No.	Components	Page*
1	EPN 900 II / EPN 900 III GF, max. door width 1.320 mm	408 / 412
2	EPN 900 II / EPN 900 III SF, max. door width 1.320 mm	408 / 412
3	GBS 97 GF, backset: 30, 35, 40, 45 mm	466
4	GBS 98 SF, backset: 35, 40, 45, 50, 55, 60, 65 mm	468
5	Switch lock	480
6	Striking plate	
7	Shoot bolt guide	
8	Floor mould	
9	Upper shoot bolt	
10	Lower shoot bolt	
11	Counter hardware	270
	Spindle	514

The sole use of ECO panic systems presents only part of the safety. The complete safety is the result of the co-operation between ECO panic systems as well as ECO doors closers and project hinges (chapter 2 and 5 of this catalouge or our price list).

* Further information regarding the single components can be found on the mentioned pages.

1. Position	2. Position	3. Position	4. Position	5. Position
PPE	2.	2	P	B
Profile Panic Exit	Double leaf	Panic	Pushbar	PAF-B

1. Position		
PE	Panic Exit	EN 1125
PPE	Profile Panic Exit	EN 1125
EE	Emergency Exit	EN 179
PEE	Profile Emergency Exit	EN 179
2. Position		
1	Single leaf	
2	Double leaf	
3. Position		
1	Active leaf panic	
2	Active- and passive leaf panic	
4. Position		
P	Pushbar (EPN 900 II / EPN 900 III	
T	Touchbar (EPN 2000 / EPN 2000 II)	
H	Handle set (lever / knob)	
5. Position		
B	Panic function B - Key operated spring bolt change (external)	
D	Panic function D - Transit function (external)	
E	Panic function E - (W=handle/knob execution)	

Swissdoor ApS • Stenhuggervej 2 • 5471 Søndersø • Danmark Telefon +45 86 28 00 00 • mail@swissdoor.dk • www.swissdoor.dk

Combination for panic doors PPE 2.2PD ■ For double-leaf profile frame doors

Recommended use		
Doors / Tests	Panic set acc EN 1125	■
	Suitable for fire- and smoke control doors F	■
	CE tested CE	■
Application recommended for:	Doors in escape ways	■
	Residential homes for the elderly	■
	Factory doors	■
	Museums	■
	Airports	■
	Stadiums and arenas	■

■ Yes - No

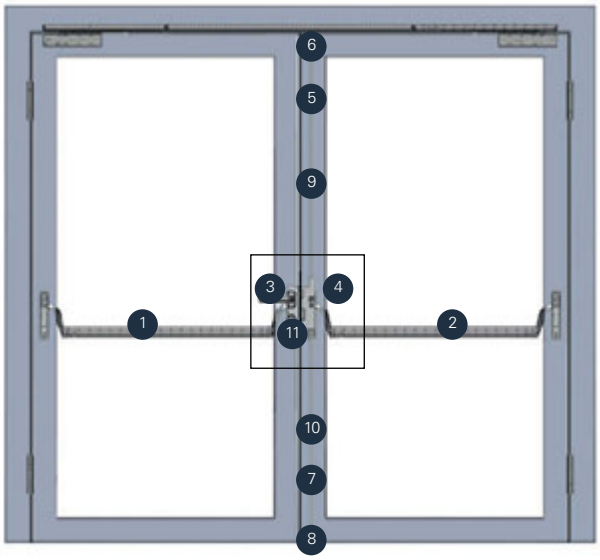

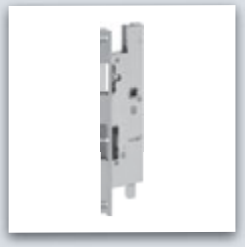

No.	Components	Page*
1	EPN 900 II / EPN 900 III GF, max. door width 1.320 mm	408 / 412
2	EPN 900 II / EPN 900 III SF, max. door width 1.320 mm	408 / 412
3	GBS 97 GF, backset: 30, 35, 40, 45 mm	466
4	GBS 98 SF, backset: 35, 40, 45, 50, 55, 60, 65 mm	468
5	Switch lock	480
6	Striking plate	
7	Shoot bolt guide	
8	Floor mould	
9	Upper shoot bolt	
10	Lower shoot bolt	
11	Counter hardware	270
	Spindle	514

PPE	2.	2	P	D
Profile Panic Exit	Double leaf	Panic	Pushbar	PAF-D

The sole use of ECO panic systems presents only part of the safety. The complete safety is the result of the co-operation between ECO panic systems as well as ECO doors closers and project hinges (chapter 2 and 5 of this catalouge or our price list).

* Further information regarding the single components can be found on the mentioned pages.

Combination for panic doors PPE 2.2PE ■ For double-leaf profile frame doors

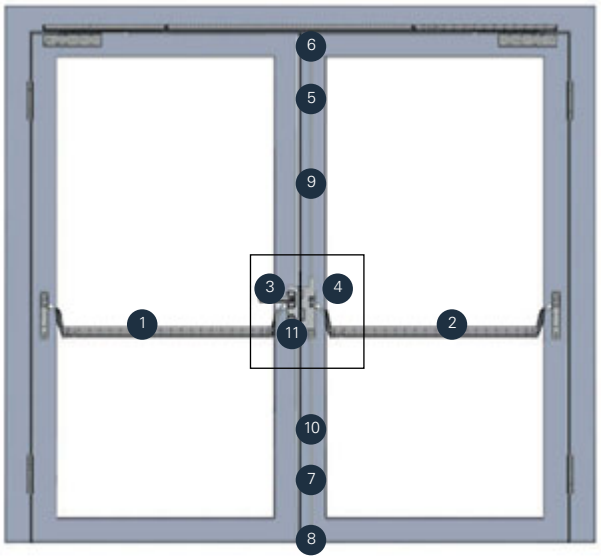

Recommended use		
Doors / Tests	Panic set acc EN 1125	■
	Suitable for fire- and smoke control doors F	■
	CE tested CE	■
Application recommended for:	Doors in escape ways	■
	Residential homes for the elderly	■
	Factory doors	■
	Museums	■
	Airports	■
	Stadiums and arenas	■

■ Yes - No

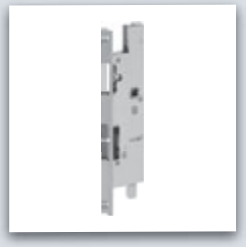

No.	Components	Page*
1	EPN 900 II / EPN 900 III GF, max. door width 1.320 mm	408 / 412
2	EPN 900 II / EPN 900 III SF, max. door width 1.320 mm	408 / 412
3	GBS 97 GF, backset: 30, 35, 40, 45 mm	466
4	GBS 98 SF, backset: 35, 40, 45, 50, 55, 60, 65 mm	468
5	Switch lock	480
6	Striking plate	
7	Shoot bolt guide	
8	Floor mould	
9	Upper shoot bolt	
10	Lower shoot bolt	
11	Counter hardware	270
	Spindle	514

The sole use of ECO panic systems presents only part of the safety. The complete safety is the result of the co-operation between ECO panic systems as well as ECO doors closers and project hinges (chapter 2 and 5 of this catalouge or our price list).

* Further information regarding the single components can be found on the mentioned pages.

1. Position	2. Position	3. Position	4. Position	5. Position
PPE	2.	2	P	E
Profile Panic Exit	Double leaf	Panic	Pushbar	PAF-E

1. Position		
PE	Panic Exit	EN 1125
PPE	Profile Panic Exit	EN 1125
EE	Emergency Exit	EN 179
PEE	Profile Emergency Exit	EN 179
2. Position		
1	Single leaf	
2	Double leaf	
3. Position		
1	Active leaf panic	
2	Active- and passive leaf panic	
4. Position		
P	Pushbar (EPN 900 II / EPN 900 III	
T	Touchbar (EPN 2000 / EPN 2000 II)	
H	Handle set (lever / knob)	
5. Position		
B	Panic function B - Key operated spring bolt change (external)	
D	Panic function D - Transit function (external)	
E	Panic function E - (W=handle/knob execution)	

Swissdoor ApS • Stenhuggervej 2 • 5471 Søndersø • Danmark Telefon +45 86 28 00 00 • mail@swissdoor.dk • www.swissdoor.dk

Combination for panic doors PPE 2.2TB ■ For double-leaf profile frame doors

Recommended use		
Doors / Tests	Panic set acc EN 1125	■
	Suitable for fire- and smoke control doors F	■
	CE tested CE	■
Application recommended for:	Doors in escape ways	■
	Residential homes for the elderly	■
	Factory doors	■
	Museums	■
	Airports	■
	Stadiums and arenas	■

■ Yes - No

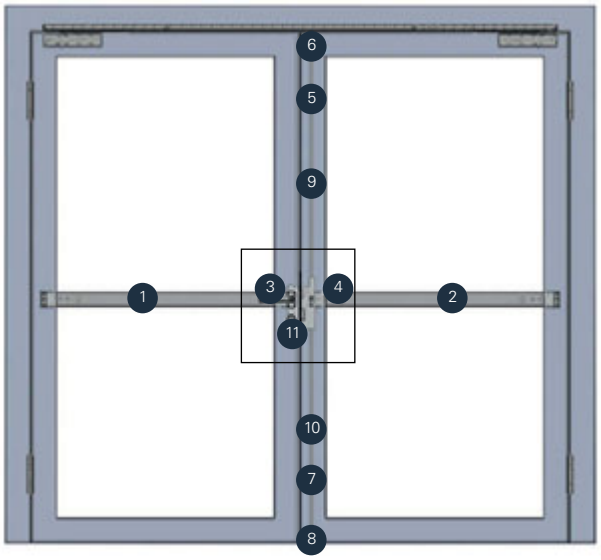

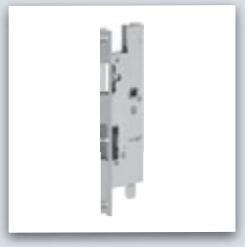

No.	Components	Page*
1	EPN 2000 / EPN 2000 II GF, max. door width 1.320 mm	394 / 401
2	EPN 2000 / EPN 2000 II SF, max. door width 1.320 mm	394 / 401
3	GBS 97 GF, backset: 30, 35, 40, 45 mm	466
4	GBS 98 SF, backset: 35, 40, 45, 50, 55, 60, 65 mm	468
5	Switch lock	480
6	Striking plate	
7	Shoot bolt guide	
8	Floor mould	
9	Upper shoot bolt	
10	Lower shoot bolt	
11	Counter hardware	270
	Spindle	514

PPE	2.	2	T	B
Profile Panic Exit	Double leaf	Panic	Touchbar	PAF-B

The sole use of ECO panic systems presents only part of the safety. The complete safety is the result of the co-operation between ECO panic systems as well as ECO doors closers and project hinges (chapter 2 and 5 of this catalouge or our price list).

* Further information regarding the single components can be found on the mentioned pages.

Combination for panic doors PPE 2.2TD ■ For double-leaf profile frame doors

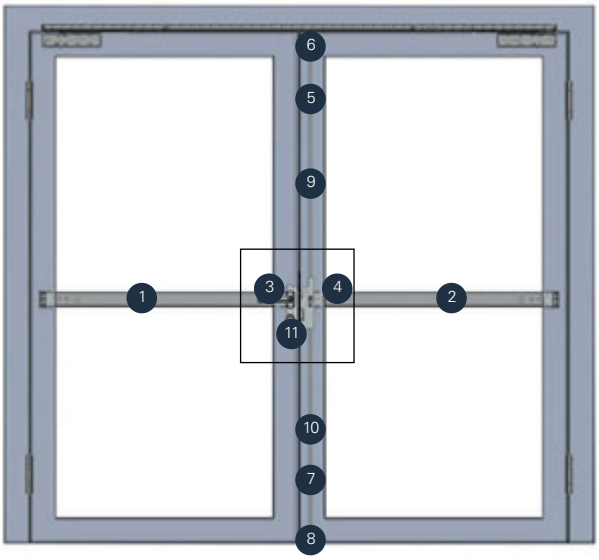

Recommended use		
Doors / Tests	Panic set acc EN 1125	■
	Suitable for fire- and smoke control doors F	■
	CE tested CE	■
Application recommended for:	Doors in escape ways	■
	Residential homes for the elderly	■
	Factory doors	■
	Museums	■
	Airports	■
	Stadiums and arenas	■

■ Yes - No

No.	Components	Page*
1	EPN 2000 / EPN 2000 II GF, max. door width 1.320 mm	394 / 401
2	EPN 2000 / EPN 2000 II SF, max. door width 1.320 mm	394 / 401
3	GBS 97 GF, backset: 30, 35, 40, 45 mm	466
	GBS 98 SF, backset: 35, 40, 45, 50, 55, 60, 65 mm	468
5	Switch lock	480
6	Striking plate	
7	Shoot bolt guide	
8	Floor mould	
9	Upper shoot bolt	
10	Lower shoot bolt	
11	Counter hardware	270
	Spindle	514

The sole use of ECO panic systems presents only part of the safety. The complete safety is the result of the co-operation between ECO panic systems as well as ECO doors closers and project hinges (chapter 2 and 5 of this catalouge or our price list).

* Further information regarding the single components can be found on the mentioned pages.

1. Position	2. Position	3. Position	4. Position	5. Position
PPE	2.	2	T	D
Profile Panic Exit	Double leaf	Panic	Touchbar	PAF-D

1. Position		
PE	Panic Exit	EN 1125
PPE	Profile Panic Exit	EN 1125
EE	Emergency Exit	EN 179
PEE	Profile Emergency Exit	EN 179
2. Position		
1	Single leaf	
2	Double leaf	
3. Position		
1	Active leaf panic	
2	Active- and passive leaf panic	
4. Position		
P	Pushbar (EPN 900 II / EPN 900 III	
T	Touchbar (EPN 2000 / EPN 2000 II)	
H	Handle set (lever / knob)	
5. Position		
B	Panic function B - Key operated spring bolt change (external)	
D	Panic function D - Transit function (external)	
E	Panic function E - (W=handle/knob execution)	

Swissdoor ApS • Stenhuggervej 2 • 5471 Søndersø • Danmark Telefon +45 86 28 00 00 • mail@swissdoor.dk • www.swissdoor.dk

Combination for panic doors PPE 2.2TE ■ For double-leaf profile frame doors

Recommended use		
Doors / Tests	Panic set acc EN 1125	■
	Suitable for fire- and smoke control doors F	■
	CE tested CE	■
Application recommended for:	Doors in escape ways	■
	Residential homes for the elderly	■
	Factory doors	■
	Museums	■
	Airports	■
	Stadiums and arenas	■

■ Yes - No

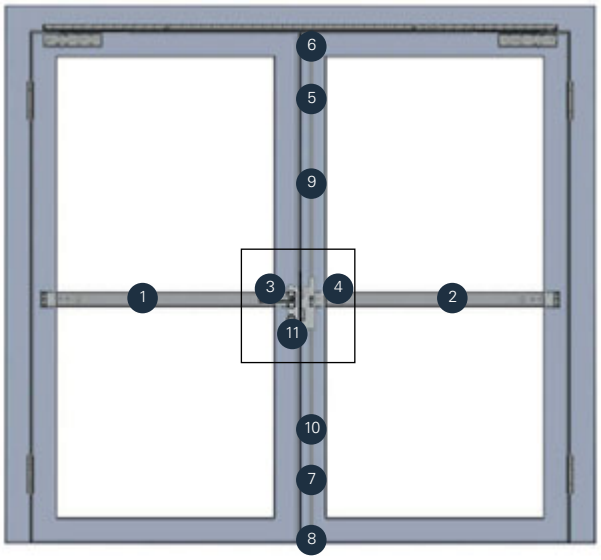

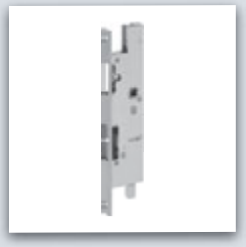

No.	Components	Page*
1	EPN 2000 / EPN 2000 II GF, max. door width 1.320 mm	394 / 401
2	EPN 2000 / EPN 2000 II SF, max. door width 1.320 mm	394 / 401
3	GBS 97 GF, backset: 30, 35, 40, 45 mm	466
4	GBS 98 SF, backset: 35, 40, 45, 50, 55, 60, 65 mm	468
5	Switch lock	480
6	Striking plate	
7	Shoot bolt guide	
8	Floor mould	
9	Upper shoot bolt	
10	Lower shoot bolt	
11	Counter hardware	270
	Spindle	514

PPE	2.	2	T	E
Profile Panic Exit	Double leaf	Panic	Touchbar	PAF-E

The sole use of ECO panic systems presents only part of the safety. The complete safety is the result of the co-operation between ECO panic systems as well as ECO doors closers and project hinges (chapter 2 and 5 of this catalouge or our price list).

* Further information regarding the single components can be found on the mentioned pages.

Combination for panic doors PPE 1.1PB ■ For single-leaf profile frame doors

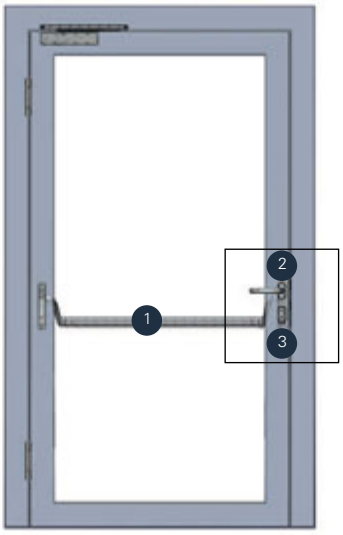

Recommended use		
Doors / Tests	Panic set acc EN 1125	■
	Suitable for fire- and smoke control doors F	■
	CE tested CE	■
Application recommended for:	Doors in escape ways	■
	Residential homes for the elderly	■
	Factory doors	■
	Museums	■
	Airports	■
	Stadiums and arenas	■

■ Yes - No

No.	Components	Page*
1	EPN 900 II / EPN 900 III, max. door width 1.320 mm	408 / 412
2	GBS 96, backset: 30, 35, 40, 45 mm	464
3	Counter hardware	270
	Spindle	514

1. Position	2. Position	3. Position	4. Position	5. Position
PPE	1.	1	P	B
Profile Panic Exit	Single leaf	Panic	Pushbar	PAF-B

1. Position		
PE	Panic Exit	EN 1125
PPE	Profile Panic Exit	EN 1125
EE	Emergency Exit	EN 179
PEE	Profile Emergency Exit	EN 179
2. Position		
1	Single leaf	
2	Double leaf	
3. Position		
1	Active leaf panic	
2	Active- and passive leaf panic	
4. Position		
P	Pushbar (EPN 900 II / EPN 900 III	
T	Touchbar (EPN 2000 / EPN 2000 II)	
H	Handle set (lever / knob)	
5. Position		
B	Panic function B - Key operated spring bolt change (external)	
D	Panic function D - Transit function (external)	
E	Panic function E - (W=handle/knob execution)	

The sole use of ECO panic systems presents only part of the safety. The complete safety is the result of the co-operation between ECO panic systems as well as ECO doors closers and project hinges (chapter 2 and 5 of this catalouge or our price list).

* Further information regarding the single components can be found on the mentioned pages.

Swissdoor ApS • Stenhuggervej 2 • 5471 Søndersø • Danmark Telefon +45 86 28 00 00 • mail@swissdoor.dk • www.swissdoor.dk

Combination for panic doors PPE 1.1PD ■ For single-leaf profile frame doors

Recommended use		
Doors / Tests	Panic set acc EN 1125	■
	Suitable for fire- and smoke control doors F	■
	CE tested CE	■
Application recommended for:	Doors in escape ways	■
	Residential homes for the elderly	■
	Factory doors	■
	Museums	■
	Airports	■
	Stadiums and arenas	■

■ Yes - No

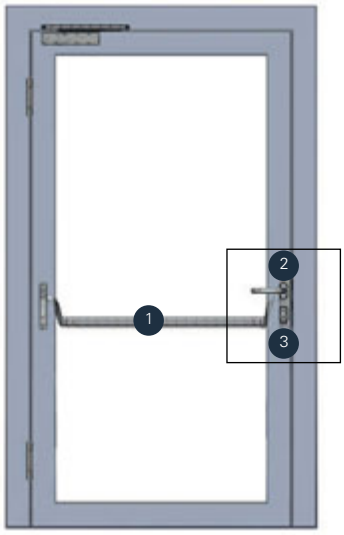

No.	Components	Page*
1	EPN 900 II / EPN 900 III, max. door width 1.320 mm	408 / 412
2	GBS 96, backset: 30, 35, 40, 45 mm	464
3	Counter hardware	270
	Spindle	514

PPE	1.	1	P	D
Profile Panic Exit	Single leaf	Panic	Pushbar	PAF-D

The sole use of ECO panic systems presents only part of the safety. The complete safety is the result of the co-operation between ECO panic systems as well as ECO doors closers and project hinges (chapter 2 and 5 of this catalouge or our price list).

* Further information regarding the single components can be found on the mentioned pages.

Combination for panic doors PPE 1.1PE ■ For single-leaf profile frame doors

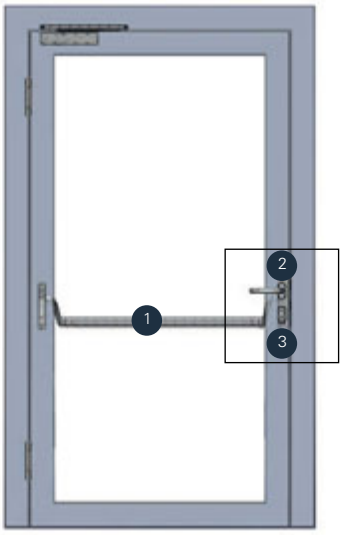

Recommended use		
Doors / Tests	Panic set acc EN 1125	■
	Suitable for fire- and smoke control doors F	■
	CE tested CE	■
Application recommended for:	Doors in escape ways	■
	Residential homes for the elderly	■
	Factory doors	■
	Museums	■
	Airports	■
	Stadiums and arenas	■

■ Yes - No

No.	Components	Page*
1	EPN 900 II / EPN 900 III, max. door width 1.320 mm	408 / 412
2	GBS 96, backset: 30, 35, 40, 45 mm	464
3	Counter hardware	270
	Spindle	514

1. Position	2. Position	3. Position	4. Position	5. Position
PPE	1.	1	P	E
Profile Panic Exit	Single leaf	Panic	Pushbar	PAF-E

1. Position		
PE	Panic Exit	EN 1125
PPE	Profile Panic Exit	EN 1125
EE	Emergency Exit	EN 179
PEE	Profile Emergency Exit	EN 179
2. Position		
1	Single leaf	
2	Double leaf	
3. Position		
1	Active leaf panic	
2	Active- and passive leaf panic	
4. Position		
P	Pushbar (EPN 900 II / EPN 900 III	
T	Touchbar (EPN 2000 / EPN 2000 II)	
H	Handle set (lever / knob)	
5. Position		
B	Panic function B - Key operated spring bolt change (external)	
D	Panic function D - Transit function (external)	
E	Panic function E - (W=handle/knob execution)	

The sole use of ECO panic systems presents only part of the safety. The complete safety is the result of the co-operation between ECO panic systems as well as ECO doors closers and project hinges (chapter 2 and 5 of this catalouge or our price list).

* Further information regarding the single components can be found on the mentioned pages.

Swissdoor ApS • Stenhuggervej 2 • 5471 Søndersø • Danmark Telefon +45 86 28 00 00 • mail@swissdoor.dk • www.swissdoor.dk

Combination for panic doors PPE 1.1TB ■ For single-leaf profile frame doors

Recommended use		
Doors / Tests	Panic set acc EN 1125	■
	Suitable for fire- and smoke control doors F	■
	CE tested CE	■
Application recommended for:	Doors in escape ways	■
	Residential homes for the elderly	■
	Factory doors	■
	Museums	■
	Airports	■
	Stadiums and arenas	■

■ Yes - No

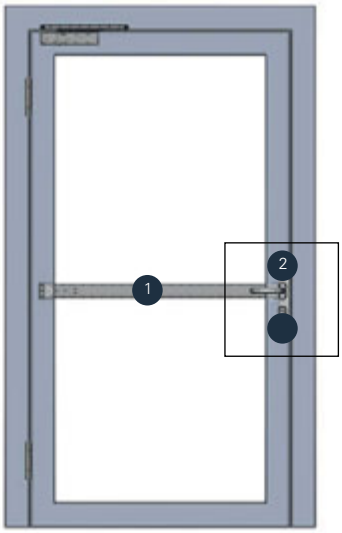

No.	Components	Page*
1	EPN 2000 / EPN 2000 II, max. door width 1.320 mm	394 / 401
2	GBS 96, backset: 30, 35, 40, 45 mm	464
3	Counter hardware	270
	Spindle	514

PPE	1.	1	T	B
Profile Panic Exit	Single leaf	Panic	Touchbar	PAF-B

The sole use of ECO panic systems presents only part of the safety. The complete safety is the result of the co-operation between ECO panic systems as well as ECO doors closers and project hinges (chapter 2 and 5 of this catalouge or our price list).

* Further information regarding the single components can be found on the mentioned pages.

Combination for panic doors PPE 1.1TD ■ For single-leaf profile frame doors

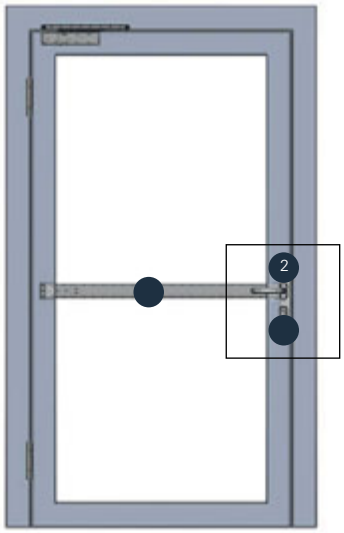

Recommended use		
Doors / Tests	Panic set acc EN 1125	■
	Suitable for fire- and smoke control doors F	■
	CE tested CE	■
Application recommended for:	Doors in escape ways	■
	Residential homes for the elderly	■
	Factory doors	■
	Museums	■
	Airports	■
	Stadiums and arenas	■

■ Yes - No

No.	Components	Page*
1	EPN 2000 / EPN 2000 II, max. door width 1.320 mm	394 / 401
2	GBS 96, backset: 30, 35, 40, 45 mm	464
3	Counter hardware	270
	Spindle	514

1. Position	2. Position	3. Position	4. Position	5. Position
PPE	1.	1	T	D
Profile Panic Exit	Single leaf	Panic	Touchbar	PAF-D

1. Position		
PE	Panic Exit	EN 1125
PPE	Profile Panic Exit	EN 1125
EE	Emergency Exit	EN 179
PEE	Profile Emergency Exit	EN 179
2. Position		
1	Single leaf	
2	Double leaf	
3. Position		
1	Active leaf panic	
2	Active- and passive leaf panic	
4. Position		
P	Pushbar (EPN 900 II / EPN 900 III	
T	Touchbar (EPN 2000 / EPN 2000 II)	
H	Handle set (lever / knob)	
5. Position		
B	Panic function B - Key operated spring bolt change (external)	
D	Panic function D - Transit function (external)	
E	Panic function E - (W=handle/knob execution)	

The sole use of ECO panic systems presents only part of the safety. The complete safety is the result of the co-operation between ECO panic systems as well as ECO doors closers and project hinges (chapter 2 and 5 of this catalouge or our price list).

* Further information regarding the single components can be found on the mentioned pages.

Swissdoor ApS • Stenhuggervej 2 • 5471 Søndersø • Danmark Telefon +45 86 28 00 00 • mail@swissdoor.dk • www.swissdoor.dk

Combination for panic doors PPE 1.1TE ■ For single-leaf profile frame doors

Recommended use		
Doors / Tests	Panic set acc EN 1125	■
	Suitable for fire- and smoke control doors F	■
	CE tested CE	■
Application recommended for:	Doors in escape ways	■
	Residential homes for the elderly	■
	Factory doors	■
	Museums	■
	Airports	■
	Stadiums and arenas	■

■ Yes - No

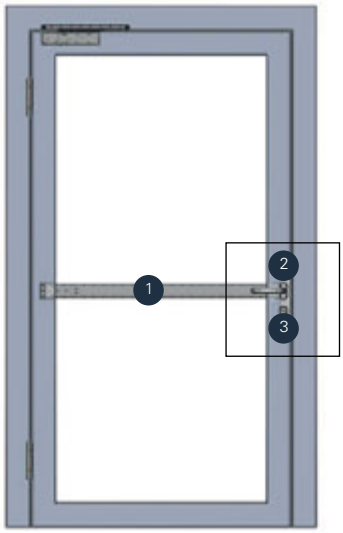

No.	Components	Page*
1	EPN 2000 / EPN 2000 II, max. door width 1.320 mm	394 / 401
2	GBS 96, backset: 30, 35, 40, 45 mm	464
3	Counter hardware	270
	Spindle	514

PPE	1.	1	T	E
Profile Panic Exit	Single leaf	Panic	Touchbar	PAF-E

The sole use of ECO panic systems presents only part of the safety. The complete safety is the result of the co-operation between ECO panic systems as well as ECO doors closers and project hinges (chapter 2 and 5 of this catalouge or our price list).

* Further information regarding the single components can be found on the mentioned pages.

Combination for emergency exits EE 1.1HB ■ For single-leaf wooden and metal doors

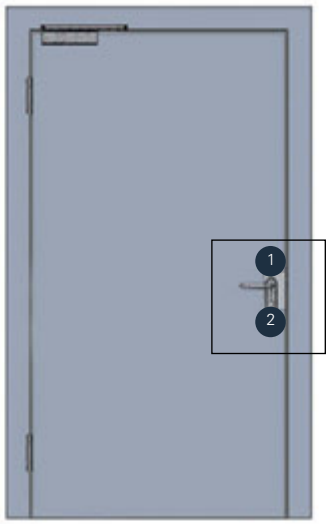

Recommended use		
Doors / Tests	Panic set acc EN 179	■
	Suitable for fire- and smoke control doors F	■
	CE tested CE	■
Application recommended for:	Doors in escape ways	■
	Residential homes for the elderly	■
	Factory doors	■
	Museums	■
	Airports	■
	Stadiums and arenas	■

■ Yes - No

No.	Components	Page*
1	GBS 81, backset: 55 mm, 65 mm	448
2	Lever set on plate VDS OGL D-110, PZ-72	204

1. Position	2. Position	3. Position	4. Position	5. Position
EE	1.	1	H	B
Emergency Exit	Single leaf	Panic	Handle Set	PAF-B

1. Position		
PE	Panic Exit	EN 1125
PPE	Profile Panic Exit	EN 1125
EE	Emergency Exit	EN 179
PEE	Profile Emergency Exit	EN 179
2. Position		
1	Single leaf	
2	Double leaf	
3. Position		
1	Active leaf panic	
2	Active- and passive leaf panic	
4. Position		
P	Pushbar (EPN 900 II / EPN 900 III	
T	Touchbar (EPN 2000 / EPN 2000 II)	
H	Handle set (lever / knob)	
5. Position		
B	Panic function B - Key operated spring bolt change (external)	
D	Panic function D - Transit function (external)	
E	Panic function E - (W=handle/knob execution)	

The sole use of ECO panic systems presents only part of the safety. The complete safety is the result of the co-operation between ECO panic systems as well as ECO doors closers and project hinges (chapter 2 and 5 of this catalouge or our price list).

* Further information regarding the single components can be found on the mentioned pages.

Swissdoor ApS • Stenhuggervej 2 • 5471 Søndersø • Danmark Telefon +45 86 28 00 00 • mail@swissdoor.dk • www.swissdoor.dk

Combination for emergency exits EE 1.1HD ■ For single-leaf wooden and metal doors

Recommended use		
Doors / Tests	Panic set acc EN 179	■
	Suitable for fire- and smoke control doors F	■
	CE tested CE	■
Application recommended for:	Doors in escape ways	■
	Residential homes for the elderly	■
	Factory doors	■
	Museums	■
	Airports	■
	Stadiums and arenas	■

■ Yes - No

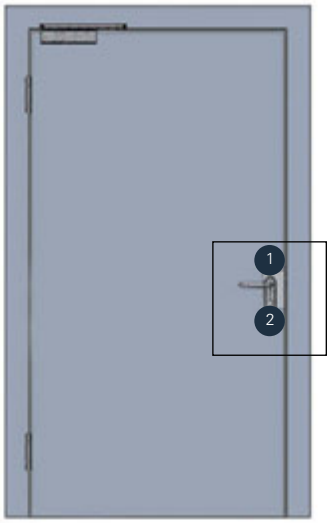

No.	Components	Page*
1	GBS 81, backset: 55 mm, 65 mm	448
2	Lever set on plate VDS OGL D-110, PZ-72	204

EE	1.	1	H	D
Emergency Exit	Single leaf	Panic	Handle Set	PAF-D

The sole use of ECO panic systems presents only part of the safety. The complete safety is the result of the co-operation between ECO panic systems as well as ECO doors closers and project hinges (chapter 2 and 5 of this catalouge or our price list).

* Further information regarding the single components can be found on the mentioned pages.

Combination for emergency exits EE 1.1HE ■ For single-leaf wooden and metal doors

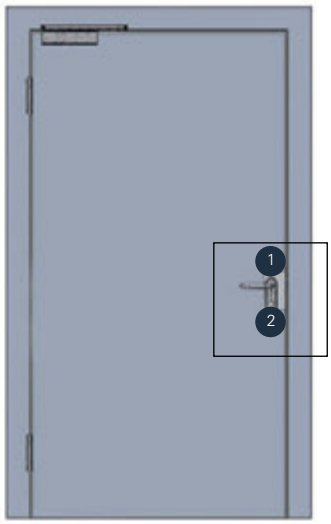

Recommended use		
Doors / Tests	Panic set acc EN 179	■
	Suitable for fire- and smoke control doors F	■
	CE tested CE	■
Application recommended for:	Doors in escape ways	■
	Residential homes for the elderly	■
	Factory doors	■
	Museums	■
	Airports	■
	Stadiums and arenas	■

■ Yes - No

No.	Components	Page*
1	GBS 81, backset: 55 mm, 65 mm	448
2	Lever set on plate VDS K-160, PZ-72	204

1. Position	2. Position	3. Position	4. Position	5. Position
EE	1.	1	H	E
Emergency Exit	Single leaf	Panic	Handle Set	PAF-E

1. Position		
PE	Panic Exit	EN 1125
PPE	Profile Panic Exit	EN 1125
EE	Emergency Exit	EN 179
PEE	Profile Emergency Exit	EN 179
2. Position		
1	Single leaf	
2	Double leaf	
3. Position		
1	Active leaf panic	
2	Active- and passive leaf panic	
4. Position		
P	Pushbar (EPN 900 II / EPN 900 III	
T	Touchbar (EPN 2000 / EPN 2000 II)	
H	Handle set (lever / knob)	
5. Position		
B	Panic function B - Key operated spring bolt change (external)	
D	Panic function D - Transit function (external)	
E	Panic function E - (W=handle/knob execution)	

The sole use of ECO panic systems presents only part of the safety. The complete safety is the result of the co-operation between ECO panic systems as well as ECO doors closers and project hinges (chapter 2 and 5 of this catalouge or our price list).

* Further information regarding the single components can be found on the mentioned pages.

Swissdoor ApS • Stenhuggervej 2 • 5471 Søndersø • Danmark Telefon +45 86 28 00 00 • mail@swissdoor.dk • www.swissdoor.dk

Combination for emergency exits PEE 1.1HB ■ For single-leaf profile frame doors

Recommended use		
Doors / Tests	Panic set acc EN 179	■
	Suitable for fire- and smoke control doors F	■
	CE tested CE	■
Application recommended for:	Doors in escape ways	■
	Residential homes for the elderly	■
	Factory doors	■
	Museums	■
	Airports	■
	Stadiums and arenas	■

■ Yes - No

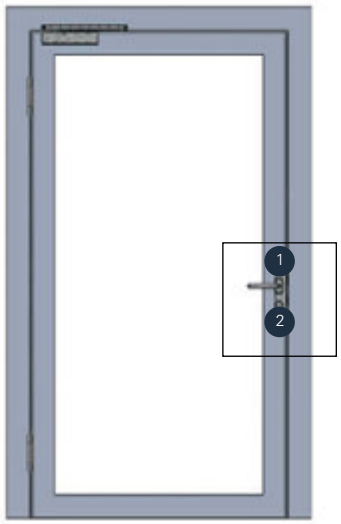

No.	Components	Page*
1	GBS 96, backset: 30, 35, 40, 45 mm	448
2	Oval lever set (OVR) D-116	270
	Spindle	340

EE	1.	1	H	B
Profile Emergency Exit	Single leaf	Panic	Handle Set	PAF-B

The sole use of ECO panic systems presents only part of the safety. The complete safety is the result of the co-operation between ECO panic systems as well as ECO doors closers and project hinges (chapter 2 and 5 of this catalouge or our price list).

* Further information regarding the single components can be found on the mentioned pages.

Combination for emergency exits PEE 1.1HD ■ For single-leaf profile frame doors

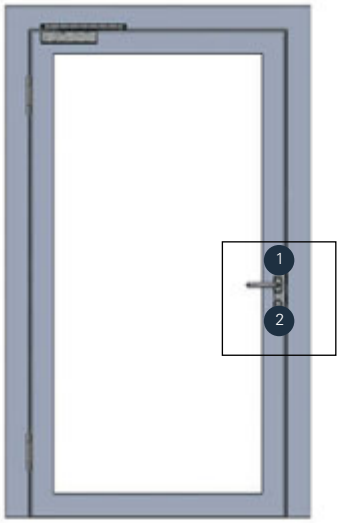

Recommended use		
Doors / Tests	Panic set acc EN 179	■
	Suitable for fire- and smoke control doors F	■
	CE tested CE	■
Application recommended for:	Doors in escape ways	■
	Residential homes for the elderly	■
	Factory doors	■
	Museums	■
	Airports	■
	Stadiums and arenas	■

■ Yes - No

No.	Components	Page*
1	GBS 96, backset: 30, 35, 40, 45 mm	448
2	Oval lever set (OVR) D-116	270
	Spindle	340

1. Position	2. Position	3. Position	4. Position	5. Position
EE	1.	1	H	D
Profile Emergency Exit	Single leaf	Panic	Handle Set	PAF-D

1. Position		
PE	Panic Exit	EN 1125
PPE	Profile Panic Exit	EN 1125
EE	Emergency Exit	EN 179
PEE	Profile Emergency Exit	EN 179
2. Position		
1	Single leaf	
2	Double leaf	
3. Position		
1	Active leaf panic	
2	Active- and passive leaf panic	
4. Position		
P	Pushbar (EPN 900 II / EPN 900 III	
T	Touchbar (EPN 2000 / EPN 2000 II)	
H	Handle set (lever / knob)	
5. Position		
B	Panic function B - Key operated spring bolt change (external)	
D	Panic function D - Transit function (external)	
E	Panic function E - (W=handle/knob execution)	

The sole use of ECO panic systems presents only part of the safety. The complete safety is the result of the co-operation between ECO panic systems as well as ECO doors closers and project hinges (chapter 2 and 5 of this catalouge or our price list).

* Further information regarding the single components can be found on the mentioned pages.

Swissdoor ApS • Stenhuggervej 2 • 5471 Søndersø • Danmark Telefon +45 86 28 00 00 • mail@swissdoor.dk • www.swissdoor.dk

Combination for emergency exits PEE 1.1HE ■ For single-leaf profile frame doors

Recommended use		
Doors / Tests	Panic set acc EN 179	■
	Suitable for fire- and smoke control doors F	■
	CE tested CE	■
Application recommended for:	Doors in escape ways	■
	Residential homes for the elderly	■
	Factory doors	■
	Museums	■
	Airports	■
	Stadiums and arenas	■

■ Yes - No

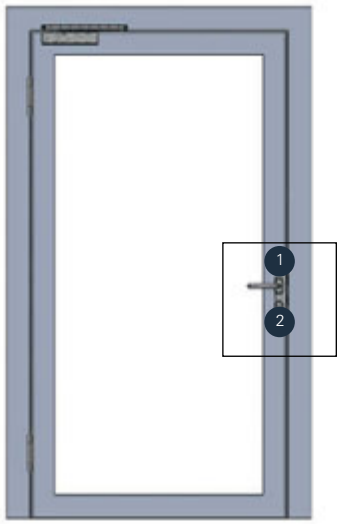

No.	Components	Page*
1	GBS 96, backset: 30, 35, 40, 45 mm	448
2	Oval lever / knob set (OVR) K-160	270
	Spindle	340

EE	1.	1	H	E
Profile Emergency Exit	Single leaf	Panic	Handle Set	PAF-E

The sole use of ECO panic systems presents only part of the safety. The complete safety is the result of the co-operation between ECO panic systems as well as ECO doors closers and project hinges (chapter 2 and 5 of this catalouge or our price list).

* Further information regarding the single components can be found on the mentioned pages.

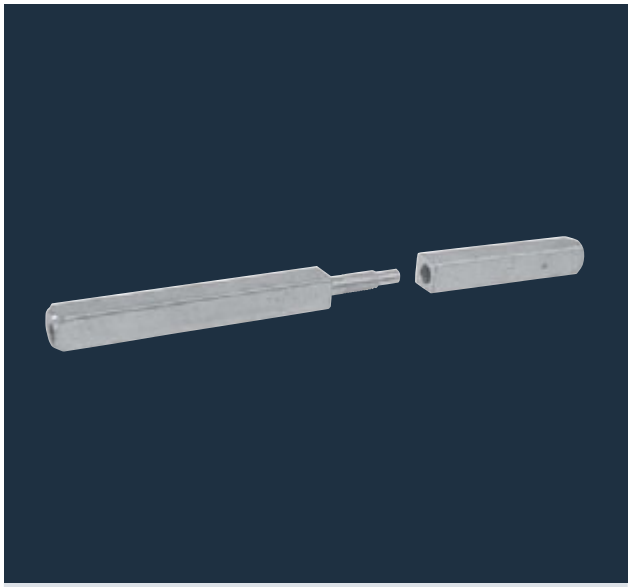

Panic pin 1 (9 mm)

F

For panic door hardware using locks with divided hub: in order to guarantee the panic function, the panic pin has to be mounted with the screw sleeve inwards. Positioning necessary!
Further lengths on request.

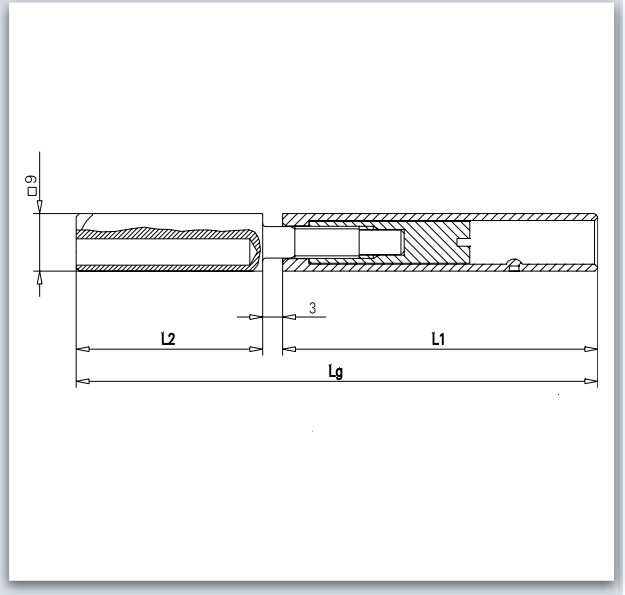

Article number	Spindle	Length (L1)	Length (L2)
901120.43	∅ 9 mm	40 mm	50 mm
901121.43	∅ 9 mm	40 mm	55 mm
901122.43	∅ 9 mm	40 mm	60 mm
901123.43	∅ 9 mm	40 mm	65 mm
901124.43	∅ 9 mm	40 mm	70 mm
901125.43	∅ 9 mm	40 mm	75 mm
901126.43	∅ 9 mm	40 mm	80 mm
901127.43	∅ 9 mm	40 mm	85 mm
901128.43	∅ 9 mm	45 mm	50 mm
901129.43	∅ 9 mm	45 mm	55 mm
901130.43	∅ 9 mm	45 mm	60 mm
901131.43	∅ 9 mm	45 mm	65 mm
901132.43	∅ 9 mm	45 mm	70 mm
901133.43	∅ 9 mm	45 mm	75 mm
901134.43	∅ 9 mm	45 mm	80 mm
901135.43	∅ 9 mm	45 mm	85 mm
901136.43	∅ 9 mm	50 mm	50 mm
901137.43	∅ 9 mm	50 mm	55 mm
901138.43	∅ 9 mm	50 mm	60 mm
901139.43	∅ 9 mm	50 mm	65 mm
901140.43	∅ 9 mm	50 mm	70 mm
901141.43	∅ 9 mm	50 mm	75 mm
901142.43	∅ 9 mm	50 mm	80 mm
901143.43	∅ 9 mm	50 mm	85 mm
901144.43	∅ 9 mm	55 mm	55 mm
901145.43	∅ 9 mm	55 mm	60 mm
901146.43	∅ 9 mm	55 mm	65 mm
901147.43	∅ 9 mm	55 mm	70 mm
901148.43	∅ 9 mm	55 mm	75 mm
901149.43	∅ 9 mm	55 mm	80 mm
901150.43	∅ 9 mm	55 mm	85 mm
901151.43	∅ 9 mm	60 mm	60 mm
901152.43	∅ 9 mm	60 mm	65 mm
901153.43	∅ 9 mm	60 mm	70 mm
901154.43	∅ 9 mm	60 mm	75 mm
901155.43	∅ 9 mm	60 mm	80 mm
901156.43	∅ 9 mm	60 mm	85 mm
901157.43	∅ 9 mm	65 mm	65 mm
901158.43	∅ 9 mm	65 mm	70 mm
901159.43	∅ 9 mm	65 mm	75 mm
901160.43	∅ 9 mm	65 mm	80 mm
901161.43	∅ 9 mm	65 mm	85 mm

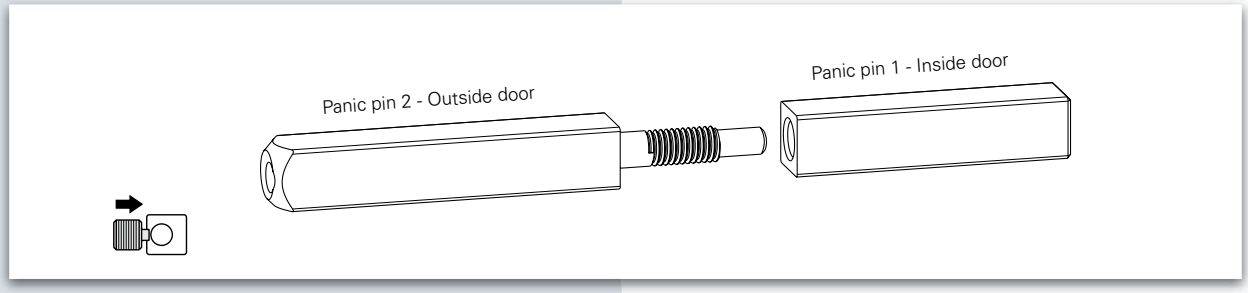

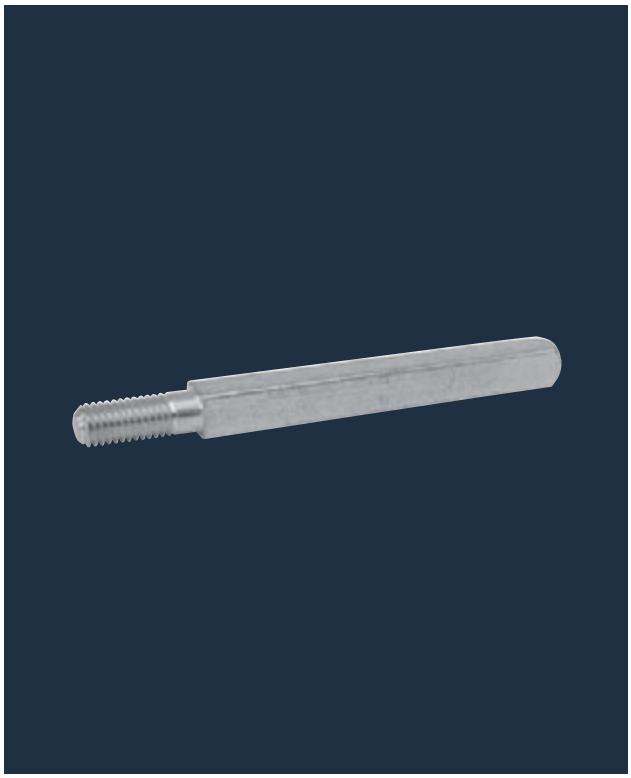

Spindle for knob/lever set (9 mm)

F

The spindle is screwed into the grip plate / knob (minimum 8 mm). Do not tighten too strong since the function of the handle has to be given.
Further lengths on request.

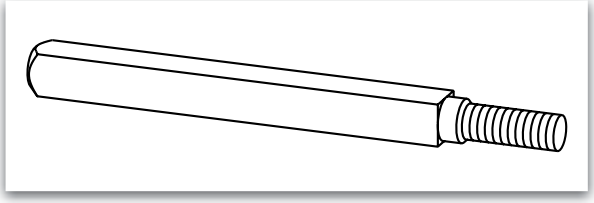

Article number	Spindle	Length
900686.43	∅ 9 mm	80 mm
900688.43	∅ 9 mm	90 mm
900689.43	∅ 9 mm	101 mm
900691.43	∅ 9 mm	110 mm
900693.43	∅ 9 mm	125 mm

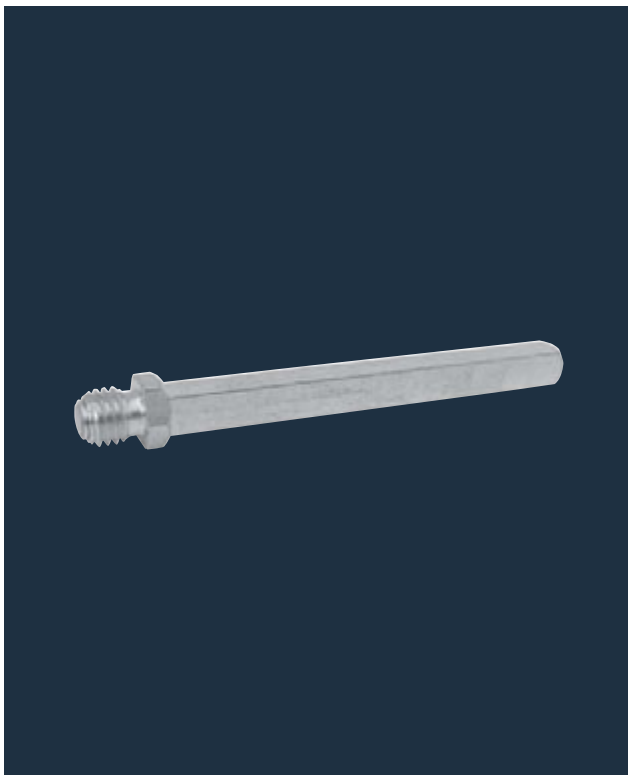

Spindle for knob/lever set with excentric drilling (9 mm)

F

The spindle is screwed into the grip plate / knob (minimum 8 mm). Do not tighten too strong since the function of the handle has to be given.
Further lengths on request.

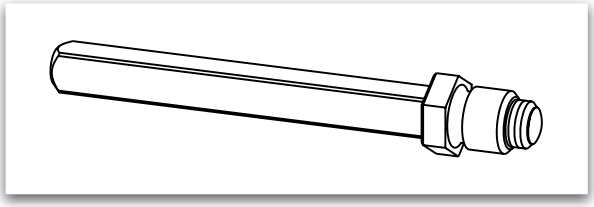

Article number	Spindle	Length
908068.43	∅ 9 mm	60 mm
908069.43	∅ 9 mm	70 mm
908067.43	∅ 9 mm	80 mm
908090.43	∅ 9 mm	100 mm
908091.43	∅ 9 mm	120 mm

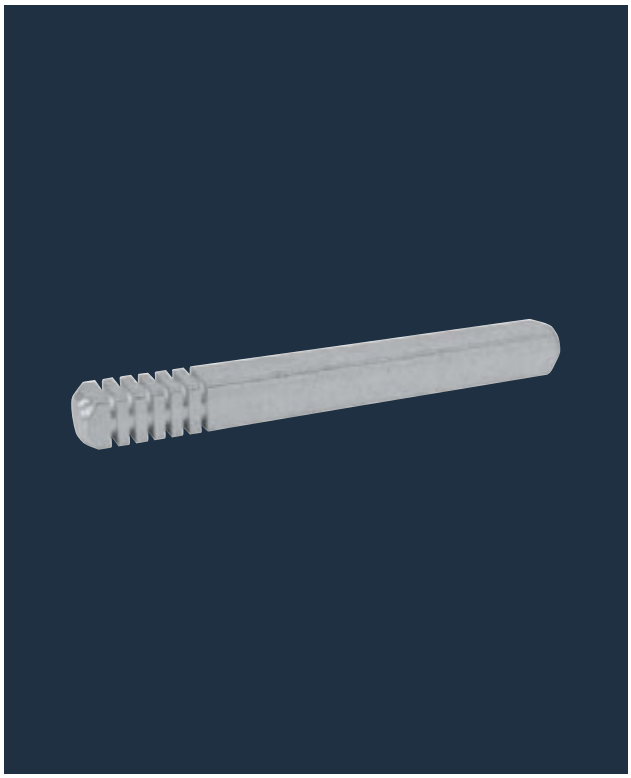

F

Spindle (9 mm)
for EPN 900 II and EPN 900 III

For fastening (EPN 900 and counter hardware), seamlessly, spindle 9 x 9 mm, zinc-plated, with slots and plug clip.

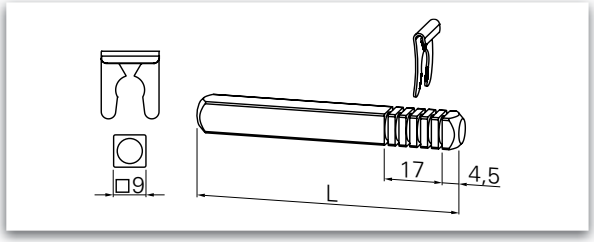

Article number	Spindle	Length
119007914300030	∅ 9 mm	55 mm
119007924300030	∅ 9 mm	75 mm
119007934300030	∅ 9 mm	95 mm

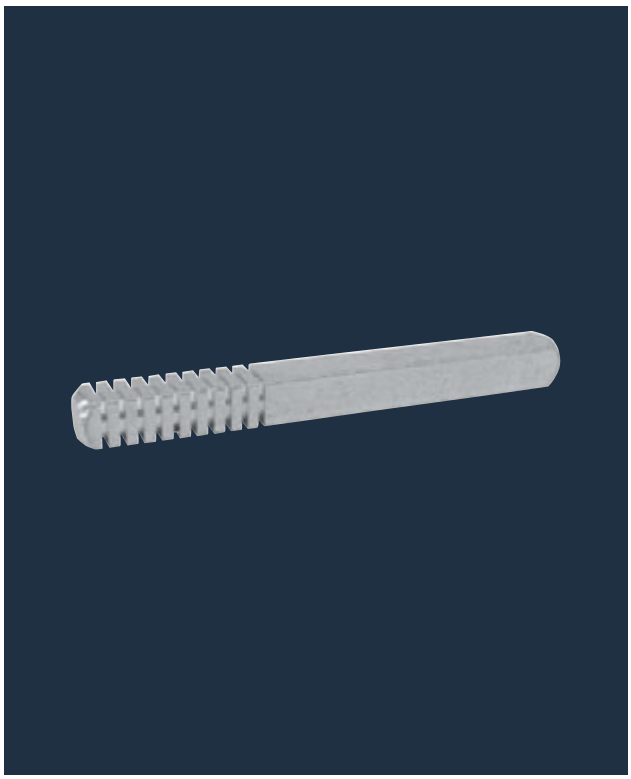

F

Spindle (9 mm) for EPN 2000

For fastening (EPN 2000 and counter hardware), seamlessly, spindle 9 x 9 mm, zinc-plated, with slots and two retaining rings **DIN 6799**.

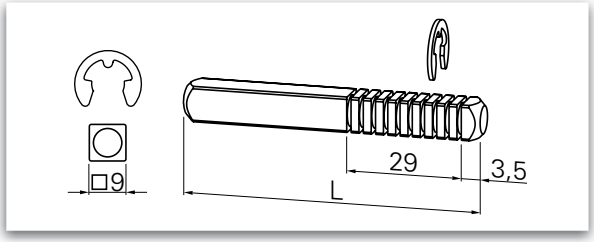

Article number	Spindle	Length
119007944300030	∅ 9 mm	55 mm
119007954300030	∅ 9 mm	75 mm
119007964300030	∅ 9 mm	95 mm

Swissdoor ApS • Stenhuggervej 2 • 5471 Søndersø • Danmark Telefon +45 86 28 00 00 • mail@swissdoor.dk • www.swissdoor.dk

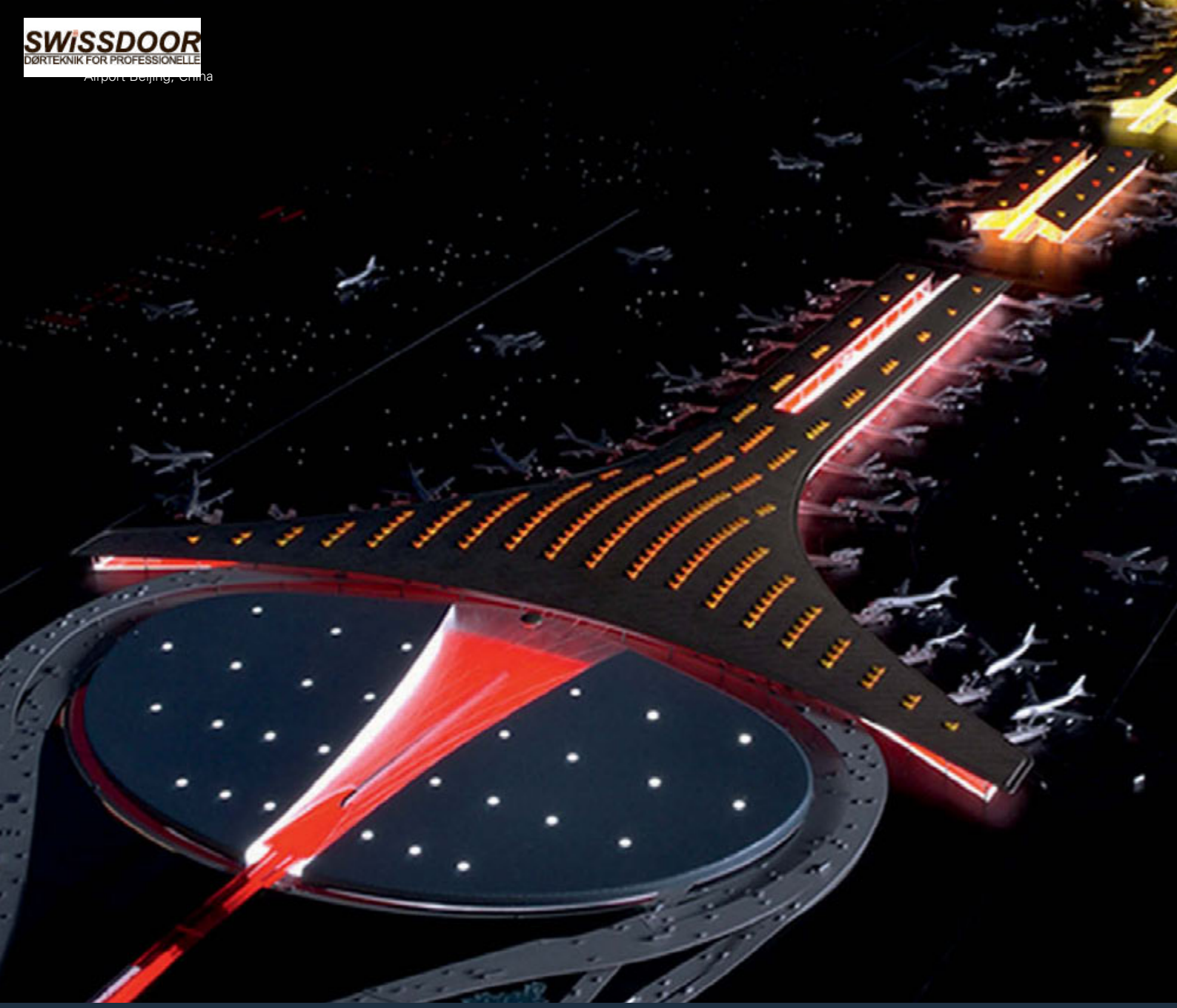
Airport Beijing, China

ECO **Panic and locking technology**
Differentiation by building utilization

The type of room and utilization of the building are decisive when choosing the right panic door combination. European standards **DIN EN 1125** and **DIN EN 179** define the fittings of panic doors and emergency exits.

Emergency exit locks in compliance with **DIN EN 179** are not normally subjected to use by the general public. It is assumed here that the users of the building are acquainted with the escape routes, so conventional panic lock technology with a handle or impact plate are sufficient here.

Panic locks with a horizontal activation bar in accordance with **DIN EN 1125**, on the other hand, are intended for use in buildings frequented by the general public. Our panic systems in conformance with **DIN EN 1125** ensure that persons who have panicked and are not acquainted with the functions of the door can always get out of the building safely.

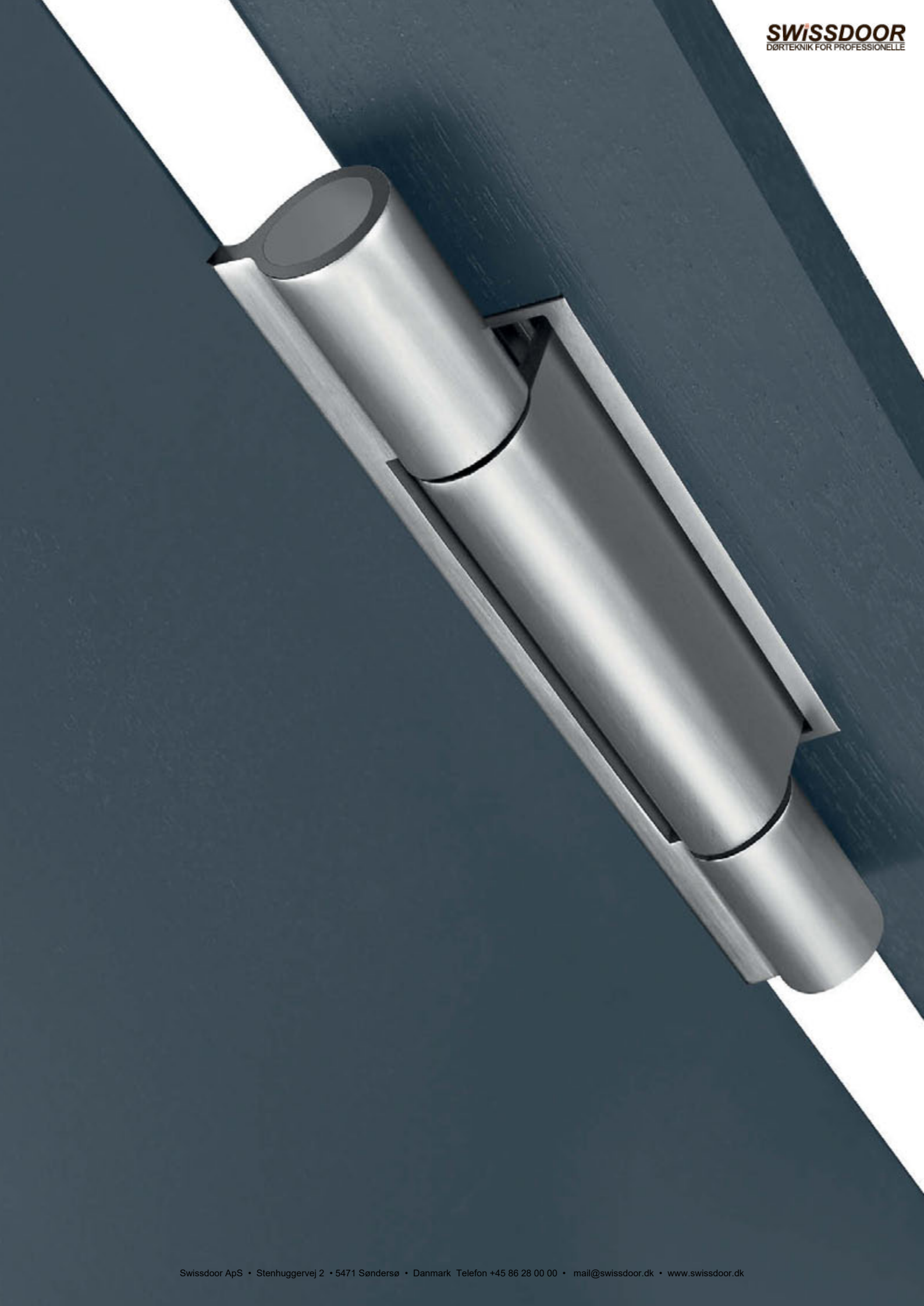

Swissdoor ApS • Stenhuggervej 2 • 5471 Søndersø • Danmark Telefon +45 86 28 00 00 • mail@swissdoor.dk • www.swissdoor.dk

Hinge technology

Supporting rollers

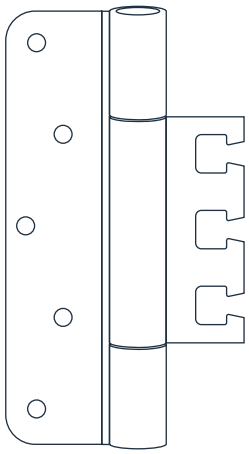

Defying the laws of leverage

The hinges connect the door leaf to the frame and enable its opening and closing. The German term Band originates from the time when doors had iron bands fitted to them, the ends of which were bent to form an eye. This eye was then hung onto a tang protruding from the door frame, thus giving rise to the English word hinge.

Many aphorisms have been dedicated to doors. One of the most powerful comes from a quote by Archimedes: "Give me a firm location outside our earth, and I will lift the world off its hinges". This adage is always used when something fundamental is changed, when a philosophy alters or a paradigm is to be reappraised. Archimedes was referring to the laws of leverage.

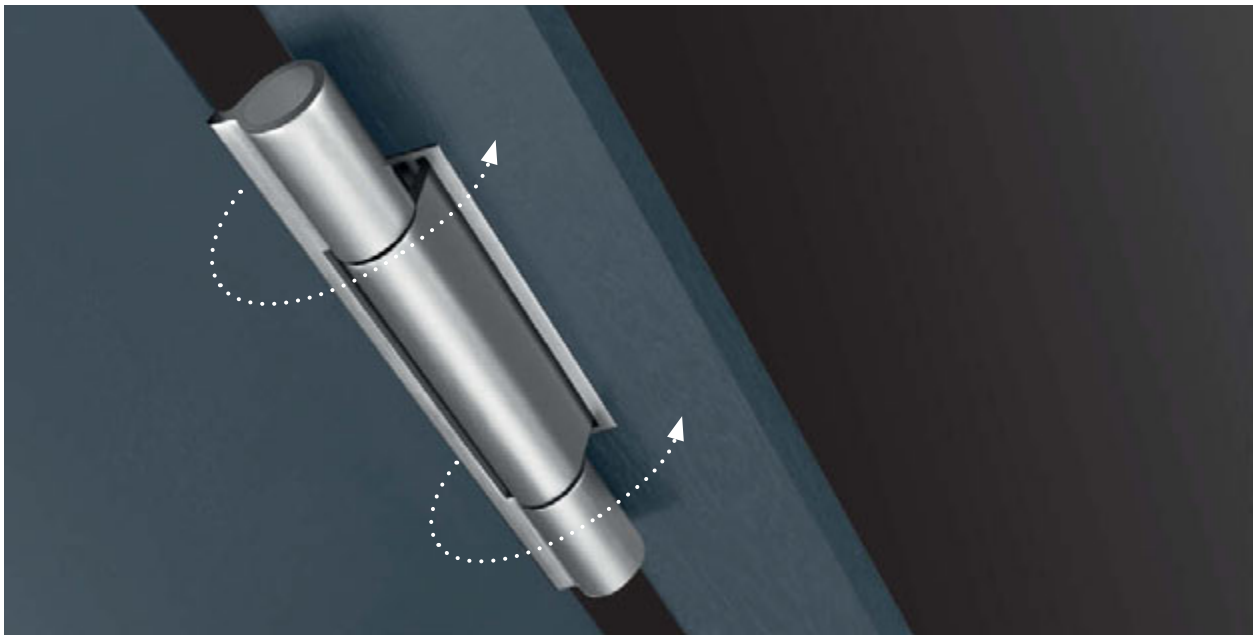

This remains true to this day: good hinges ensure that doors open the way we expect them to. They define the fulcrum - and thereby the mobility of the door - and give the door leaf a solid support.

Door hinges must be precisely coordinated to the dimensions of a door - to its measurements, weight, type of mounting and location. They are not just hard-wearing components of a door. ECO Schulte can look back on decades of experience in the manufacture of hinges. ECO hinges are premium products that comply with the standard **EN 1935.** They bear the CE mark and are tested in the highest standard class (14).

Swissdoor ApS • Stenhuggervej 2 • 5471 Søndersø • Danmark Telefon +45 86 28 00 00 • mail@swissdoor.dk • www.swissdoor.dk

Premium ball-bearings

The quality of a hinge is determined to a great extent by the quality of the bearing. That is why ECO Schulte developed its own bearings technology especially for its hinge plates and registerd it for patenting (DE 1036 1548 B4). The bearing is characteristic: the roller is guided top and bottom on a steel ball, each mounted in two high-strength plastic trays. This specific bearing is wear, maintenance and play-free and guarantees the light and smooth running of the door. The double bearing controls axial and radial forces effectively and permanently. In a series of practical tests, this bearings technology was successfully tested by an independent institute for more than one million closing actions. That more than guarantees lifelong, secure functioning.

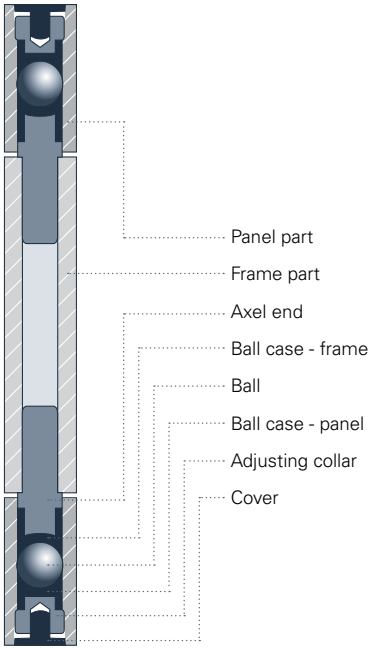

Hinge plates - Versions

The high-quality hinge plates from ECO Schulte are available for all standard door types. Individual solutions to match each door are also available, depending on requirements.

OBX hinge plates - Perfectly adjustable

Because hinge plates of this type are three dimensionally adjustable within the element that holds them when the door is mounted, installation is made considerably easier. The number behind the OBX mark indicates the diameter of the roller used. Hinge plate OBX 20 is cast in stainless steel for the highest possible surface quality and fitting precision of the roller and eye.

OBN hinge plates - Firmly bolted for fixed doors

Hinge plates of this type are installed by the door manufacturer or processor and cannot be adjusted. The number behind the OBN mark indicates the diameter of the roller used. Hinge plate OBN 20 is cast in stainless steel for the highest possible surface quality and fitting precision of the roller and eye.

The highlights of the system

The quality of a hinge can be seen from the details. ECO is the specialist for hinges and can score points here - not only through the fact that ECO hinges can be used DIN-left / DIN-right without conversion.

Premium ball-bearings

With its patented ball-bearing technology, ECO Schulte has a unique selling point in the market and sets a new standard in the premium segment. The right product for those who place the highest demands on a door hinge. ECO Schulte OBX and OBN hinges are absolutely maintenance-free and work without any lubrication. Unsightly deposits of grease and oil on the visible parts of the hinge are a thing of the past. The absolutely play-free door bearings guarantee optimum load transfer via both hinges.

Cast roller holders

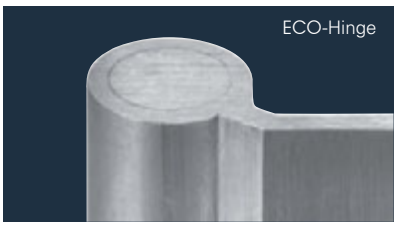

The processing of stainless steel is a demanding affair, as can be seen from the example of the hinge roller: ECO investment casting technology produces a perfect, closed roller holder. Thanks to the homogeneity of the material all the way through to the hinge flaps, the load transfer of our hinges is guaranteed to a well above average extent.
That precison and quality of this kind are not a matter of course can be seen from the rival product depicted here. The holder of this roller has some play and can be levered up - a mortgage on the service life of the product and an invitation to burglars.

Defined edges

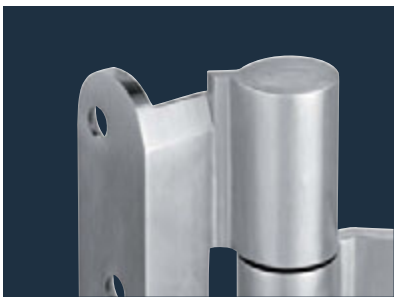

ECO Schulte hinge plates are in a class of their own where aesthetics and precision are concerned. The defined edge of the holder surface ensures the best possible fitting precision and force distribution. It also proves that the system constructors from the Westphalian town of Menden are masters where the handling of materials and hinges is concerned.

System-identical finish pattern

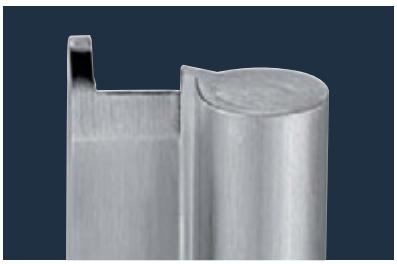

ECO Schulte perceives the door as a system consisting of all of the functional elements that make a door open and close. Where the hinge plates are concerned, ECO demonstrates a love of detail by polishing the stainless steel surface of the hinges in the longitudinal direction so that the fine finish pattern thus produced is exactly the same as the one on the handle fittings from the same company.

Swissdoor ApS • Stenhuggervej 2 • 5471 Søndersø • Danmark Telefon +45 86 28 00 00 • mail@swissdoor.dk • www.swissdoor.dk

Weights and loads

Door hinges are high load-bearing construction elements. They not only have to carry the weight of the door itself, they are subjected to much higher loads, depending on where they are used. Frequent opening, slamming and exceptional handling of doors, as occurs in barracks and schools, can take conventional hinges to their limits if they are only designed to carry the weight of the door.

ECO Schulte hinges have a closed hinge roller which is manufactured using elaborate cold forging technology which prevents the roller from bending up. There are no compromises with the material thickness of the hinges either: ECO Schulte hinge flaps can carry loads of up to 300 kg each.

Maximum door weight of hinge plates

Notch	max. door load: 300 kg	max. door load: 200 kg	max. door load: 160 kg	max. door load: 120 kg
Rebated notch	OBX-20-1531/160 OBX-20-1532/160	OBX-20-1531/120 OBX-20-1532/120 OBX-20-1951/160	OBX-20-1951/120 OBX-18-1532/160 OBX-18-1531/160	OBX-18-1531/120
Unrebated notch	OBX-20-2541/160 OBX-20-2542/160 OBN-20-4141/160	OBX-20-2541/120 OBX-20-2542/120	OBX-18-2541/160 OBN-18-4141/160	OBX-18-2541/120 OBN-18-4141/120

The listed values were measured under 100% test lab conditions. Please observe them when selecting hinge plates.

Assuming the proper mounting of the door, the material stability of the construction element to which they are to be attached and an effective bonding with the masonry, ECO Schulte hinges should be selected and utilized in accordance with the above table with sufficient load and safety reserves, particularly where special locations are concerned. The use of a third hinge with the ECO Schulte system is only necessary under particularly difficult conditions. A third hinge attached in the upper third of the door frame can increase the load-bearing capacity of the hinges by around one third.

For all notches

Technical, construction and aesthetic requirements determine the form of the edge of the door leaf - and consequently the required hinge. Typical edge types are blunt notch and rebated doors - and variations thereof. ECO Schulte has hinges in its range for the following door notch versions:

Rebated door versions:

1a. Rebated door

The rebated door leaf has a single groove on the lateral and upper edge. The closed door locks into the frame so that no gap is visible.

1b. Rebated door with leaf seal

This rebated door has an additional seal in the locking groove.

Variations of the flush door:

2a. Flush door

The door leaf of a flush door is flush with the frame when closed. A circumferential gap (joint clearance) remains visible from the abutment side.

2b. Flush door with double groove

This door combines the optical effect of the flush door (frame and door leaf flush) with the improved sealing properties of the grooved door. A double rubber seal in the door frame ensures outstanding sound and heat insulation. This makes the double groove door a typical front door in many homes.

Variants of the grooved, flush-surface door:

3. Diminishing door

A special door design with which continuous wall panelling extends over the door leaf. The door leaf is grooved but closes flush with the panelling. A circumferential gap (joint clearance) remains visible from the abutment side.

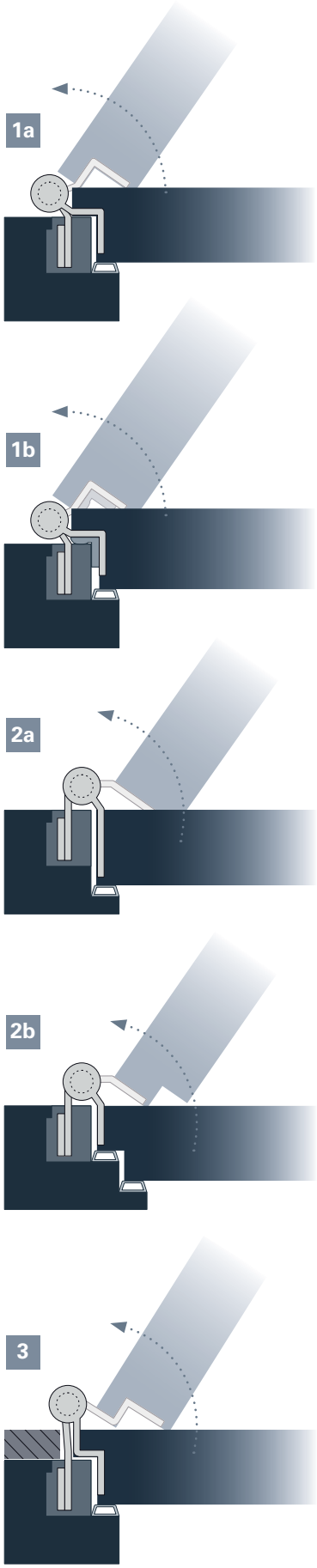

Swissdoor ApS • Stenhuggervej 2 • 5471 Søndersø • Danmark Telefon +45 86 28 00 00 • mail@swissdoor.dk • www.swissdoor.dk

Steel doors: OEM hinges made to measure

ECO Schulte offers processors and door manufacturers a wide range of individually developed hinges for sheet steel doors (German Patent 102008049740.1, European Patent 09008617.4). These hinges are constructed and manufactured for series production in accordance with customers' requirements. The most innovative OEM solution from ECO Schulte is called the ECO GENIUS LHA and is a laser-welded industrial hinge.
LHA stands for "laser hinge adjustable" and it is not only laser-welded but also height adjustable. "

Laser welding technology produces minimum contact, precise and highly stable welding seams. The technology combines top manufacturing precision with a high load-carrying capacity. The height adjustment of the hinge during assembly is very simple and is carried out using a standard commercial Allen key.

The new manufacturing concept satisfies the needs of the door industry in a flexible manner:

- Frame and leaf parts are available separately
- A set consists of a spring hinge that support the closing force and a standard hinge (KO hinge)
- Various materials available (galvanized or stainless steel)
- Various material thicknesses (3, 4 or 5 mm)
- Flexible tools for a flexible manufacturing concept

Project hinges OBX 20 mm ▪ Stainless steel
for mortise rebated door 3D hinge

OBX-20-1531/160
for mortise rebated door
3D hinge
Page 530

OBX-20-1531/120
for mortise rebated door
3D hinge
Page 532

OBX-20-1532/160 FD
for mortise rebated door
3D hinge
Page 534

OBX-20-1532/120 FD
for mortise rebated door
3D hinge
Page 536

OBX-20-1951/160
for mortise rebated door
3D hinge
Page 538

OBX-20-1951/120
for mortise rebated door
3D hinge
Page 540

Project hinges OBX 20 mm ▪ Stainless steel
for mortise flush door 3D hinge

OBX-20-2541/160
for mortise flush door
3D hinge
Page 542

OBX-20-2541/120
for mortise flush door
3D hinge
Page 544

OBX-20-2542/160
for mortise flush door
3D hinge
Page 546

OBX-20-2542/120
for mortise flush door
3D hinge
Page 548

Swissdoor ApS • Stenhuggervej 2 • 5471 Søndersø • Danmark Telefon +45 86 28 00 00 • mail@swissdoor.dk • www.swissdoor.dk

TABLE OF CONTENTS

Project hinges OBX 18 mm ▪ Stainless steel / steel
rebated / mortise flush door 3D hinge

OBX-18-1531/160
for mortise rebated
door 3D hinge
Page 552

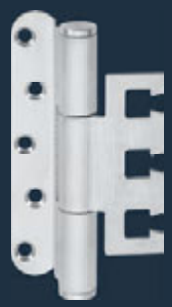

OBX-18-1531/120
for mortise rebated
door 3D hinge
Page 554

OBX-18-1532/160 FD
for mortise rebated
door 3D hinge
Page 556

OBX-18-2541/160
for mortise flush
door 3D hinge
Page 558

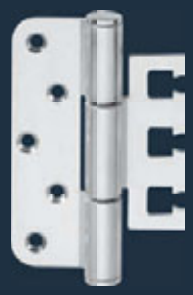

OBX-18-2541/120
for mortise flush
door 3D hinge
Page 560

Project hinges OBN 20 und 18 mm ▪ Stainless steel / steel
for mortise flush door hinge

OBN-20-4141/160
for mortise flush
door hinge
Page 564

OBN-18-4141/160
for mortise flush
door hinge
Page 566

OBN-18-4141/120 round
for mortise flush
door hinge
Page 568

OBN-18-4141/120 square
for mortise flush
door hinge
Page 570

Adjustable frame boxes ▪ Cover plates ▪ Lifting lug

OBX adjustable frame boxes
for OBX-hinges
Page 574

OBX-Cover plates
for adjustable frame boxes
Page 578

OBX-Lifting lug
for OBX-hinges
Page 580

Laser-welded steel hinges ▪ GENIUS LHA

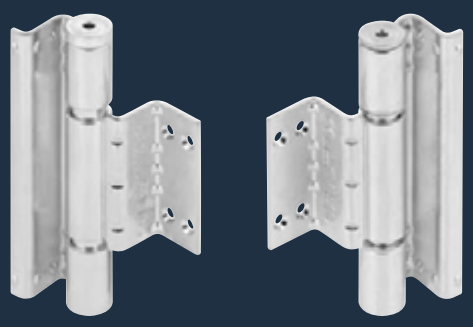

GENIUS LHA
Hinge with spring / KO hinge set
Page 582

Laser-welded steel hinges ▪ Standard 3 mm

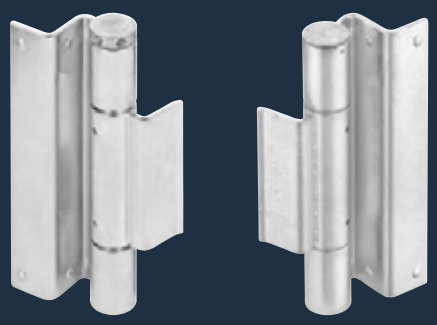

Standard 3 mm
Hinge with spring / KO hinge set
Page 584

Swissdoor ApS • Stenhuggervej 2 • 5471 Søndersø • Danmark Telefon +45 86 28 00 00 • mail@swissdoor.dk • www.swissdoor.dk

Laser-welded steel hinges ▪ Standard 4 mm

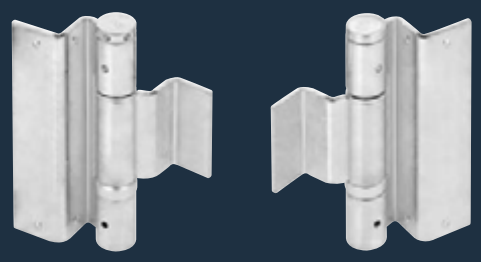

Standard 4 mm
Hinge with spring / KO hinge set
Page 586

Laser-welded steel hinges ▪ 3 mm adjustable in height and side

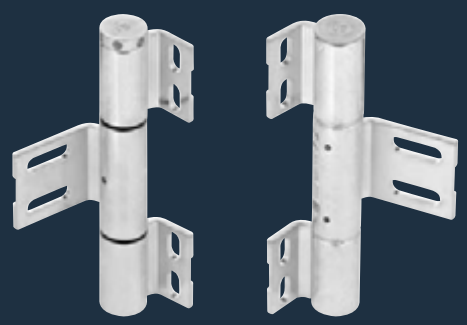

Adjustment in height 3 mm
Hinge with spring / KO hinge set
Page 588

Laser-welded steel hinges ▪ Accessories

Locking pin 3 mm / 4 mm
Page 590

Spring pin
3 mm / 4 mm
Page 590

Swissdoor ApS • Stenhuggervej 2 • 5471 Søndersø • Danmark Telefon +45 86 28 00 00 • mail@swissdoor.dk • www.swissdoor.dk

SWISSDOOR
DØRTEKNIK FOR PROFESSIONELLE

ECO

Project hinges
OBX-20

■ SYSTEM TECHNOLOGY FOR THE DOOR

Project hinges ▪ OBX-20 ▪ Mortise rebated door 3D hinge

OBX-20-1531/160

Product characteristics		
Size		160 mm
Ø Barrel diameter		20 mm
Material thickness		3,5 mm
Screws		5 x 50 mm
DIN left / DIN right		■
Milling diameter		24 mm
Milling length		160 mm
Milling depth		3,5 mm
Door types	Rebated	■
	Flush with the adjacent areas	
Frame types	Wood	■
	Steel	■
	Aluminium	■
Suitable for fire doors	F	■
Loading capacity Class 14 (maximum door load)	EN 1935 CE	■
	Norm	160 kg
	ECO loading capacity	300 kg
Finishes	Stainless steel (ER)	■
	ER polished	◘
	PVD coating (brass)	◘
	PVD coating in RAL colours	◘
Reception elements Page 574	For upright standing pillars	OBX-3001-3D
	For timber frames	OBX-3002-3D
	For steel frames	OBX-3011-3D
		OBX-3012-3D
	For aluminium frames	OBX-3021-3D

■ Yes - No ◘ On request

Dimension drawing

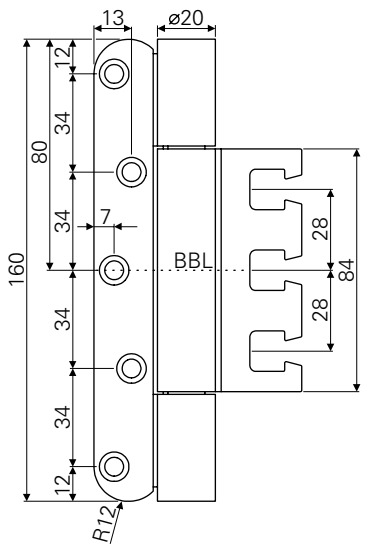

Milling drawing

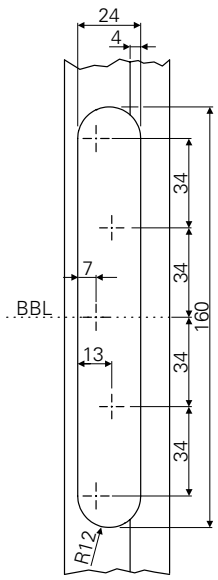

Top view

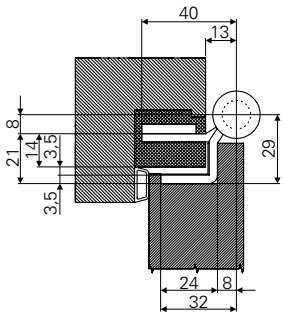

Swissdoor ApS • Stenhuggervej 2 • 5471 Søndersø • Danmark Telefon +45 86 28 00 00 • mail@swissdoor.dk • www.swissdoor.dk

PRODUCT FAMILY ▪ MORTISE REBATED DOOR 3D HINGE

OBX-20-1531/120.ER

OBX-20-1532/160.ER
OBX-20-1532/120.ER

OBX-20-1951/160.ER
OBX-20-1951/120.ER

Description

ECO **project hinge OBX-20-1531/160**

- For rebated doors on wooden, steel or aluminium frames
- With OBX adjustable frame box adjustable in three dimensions
- Inner, firmly rotating axis
- Wear and maintenance-free ball bearing technology
- Suitable for fire doors
- Can be used DIN left and DIN right without modification

ER F EN 1935 CE Rost frei

OBX-20-1531 mortise rebated door 3D hinge	Dimensions	Article number
OBX-20-1531/160.ER	Ø 20 x 160 mm	459231.46

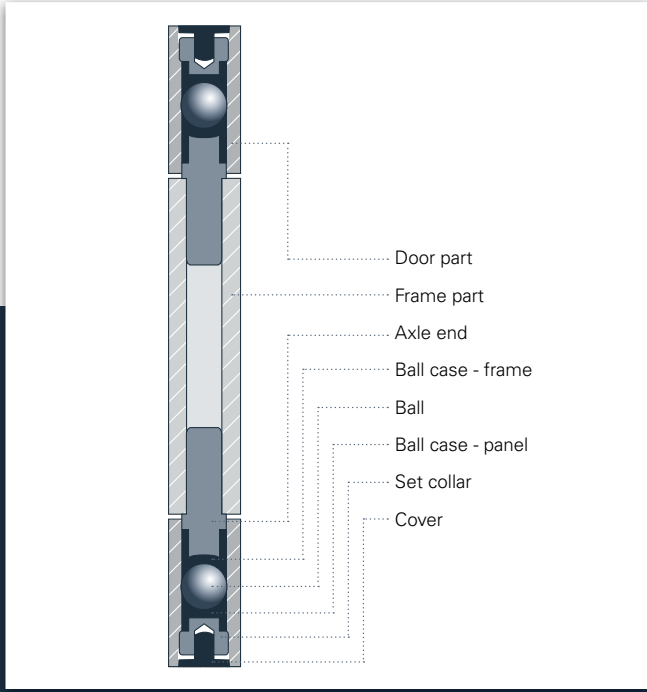

ECO Schulte is using a patented bearing technology for the production of OBX and OBN hinges. This technology guarantees a lifelong function.

OBX-20-1531/120

Product characteristics		
Size		120 mm
Ø Barrel diameter		20 mm
Material thickness		3,5 mm
Screws		5 x 50 mm
DIN left / DIN right		■
Milling diameter		24 mm
Milling length		120 mm
Milling depth		3,5 mm
Door types	Rebated	■
	Flush with the adjacent areas	-
Frame types	Wood	■
	Steel	■
	Aluminium	■
Suitable for fire doors	F	■
Loading capacity Class 14 (maximum door load)	EN 1935 CE	■
	Norm	160 kg
	ECO loading capacity	200 kg
Finishes	Stainless steel (ER)	■
	ER polished	◘
	PVD coating (brass)	◘
	PVD coating in RAL colours	◘
Reception elements page 574	For upright standing pillars	OBX-3001-3D
	For timber frames	OBX-3002-3D
	For steel frames	OBX-3011-3D
		OBX-3012-3D
	For aluminium frames	OBX-3021-3D

■ Yes - No ◘ On request

Dimension drawing

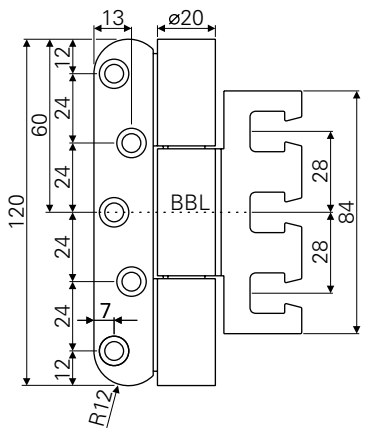

Milling drawing

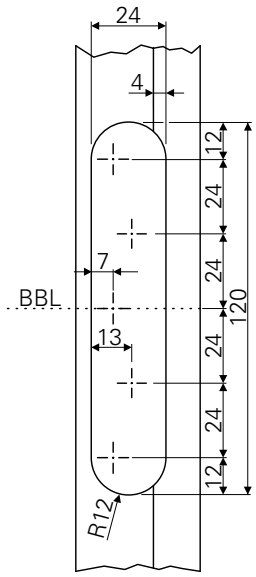

Top view

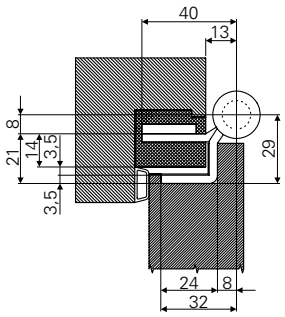

Swissdoor ApS • Stenhuggervej 2 • 5471 Søndersø • Danmark Telefon +45 86 28 00 00 • mail@swissdoor.dk • www.swissdoor.dk

PRODUCT FAMILY ▪ MORTISE REBATED DOOR 3D HINGE

OBX-20-1531/160.ER

OBX-20-1532/160.ER
OBX-20-1532/120.ER

OBX-20-1951/160.ER
OBX-20-1951/120.ER

Description

ECO **project hinge OBX-20-1531/120**

- For rebated doors on wooden, steel or aluminium frames
- With OBX adjustable frame box adjustable in three dimensions
- Inner, firmly rotating axis
- Wear and maintenance-free ball bearing technology
- Suitable for fire doors
- Can be used DIN left and DIN right without modification

ER F EN 1935 CE Rost frei

OBX-20-1531 mortise rebated door 3D hinge	Dimensions	Article number
OBX-20-1531/120.ER	Ø 20 x 120 mm	459131.46

Swissdoor ApS • Stenhuggervej 2 • 5471 Søndersø • Danmark Telefon +45 86 28 00 00 • mail@swissdoor.dk • www.swissdoor.dk

Project hinges ▪ OBX-20 ▪ Mortise rebated door 3D hinge ▪ Leaf gasket

OBX-20-1532/160 FD

Product characteristics		
Size		160 mm
Ø Barrel diameter		20 mm
Material thickness		3,5 mm
Screws		5 x 50 mm
DIN left / DIN right		■
Milling diameter		24 mm
Milling length		160 mm
Milling depth		11 mm
Door types	Rebated	■
	Flush with the adjacent areas	-
Frame types	Wood	■
	Steel	■
	Aluminium	■
Suitable for fire doors	F	■
Loading capacity Class 14 (maximum door load)	EN 1935 CE	■
	Norm	160 kg
	ECO loading capacity	300 kg
Finishes	Stainless steel (ER)	■
	ER polished	◘
	PVD coating (brass)	◘
	PVD coating in RAL colours	◘
Reception elements Page 574	For upright standing pillars	OBX-3001-3D
	For timber frames	OBX-3002-3D
	For steel frames	OBX-3011-3D
		OBX-3012-3D
	For aluminium frames	OBX-3021-3D

■ Yes - No ◘ On request

Dimension drawing

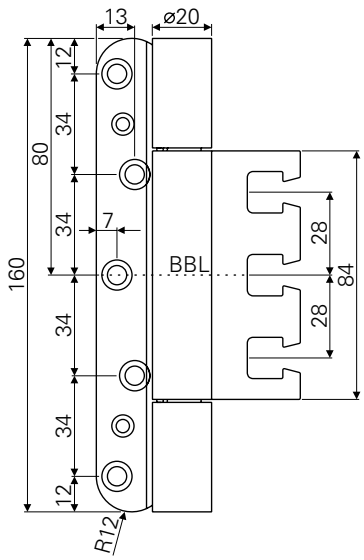

Milling drawing

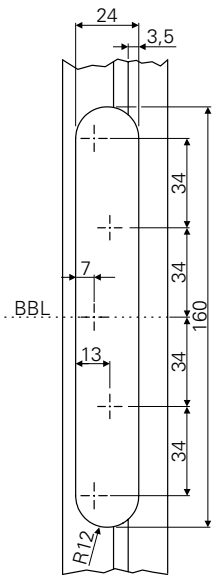

Top view

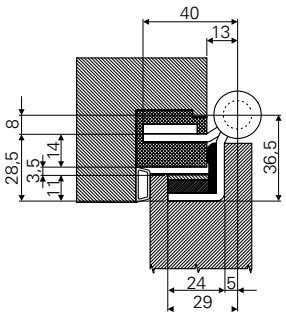

Swissdoor ApS • Stenhuggervej 2 • 5471 Søndersø • Danmark Telefon +45 86 28 00 00 • mail@swissdoor.dk • www.swissdoor.dk

PRODUCT FAMILY ▪ MORTISE REBATED DOOR 3D HINGE

OBX-20-1531/160.ER
OBX-20-1531/120.ER

OBX-20-1532/120.ER

OBX-20-1951/160.ER
OBX-20-1951/120.ER

Description

ECO **project hinge OBX-20-1532/160 leaf gasket (FD)**

- For rebated doors on wooden, steel or aluminium frames
- With OBX adjustable frame box adjustable in three dimensions
- Inner, firmly rotating axis
- Wear and maintenance-free ball bearing technology
- Suitable for fire doors
- Can be used DIN left and DIN right without modification

ER F EN 1935 CE Rost frei

OBX-20-1532 mortise rebated door 3D hinge leaf gasket	Dimensions	Article number
OBX-20-1532.FD/160.ER	Ø 20 x 160 mm	459232.46

OBX-20-1532/120 FD

Product characteristics		
Size		120 mm
Ø Barrel diameter		20 mm
Material thickness		3,5 mm
Screws		5 x 50 mm
DIN left / DIN right		■
Milling diameter		24 mm
Milling length		120 mm
Milling depth		11 mm
Door types	Rebated	■
	Flush with the adjacent areas	■
Frame types	Wood	■
	Steel	■
	Aluminium	■
Suitable for fire doors	F	■
Loading capacity Class 14 (maximum door load)	EN 1935 CE	■
	Norm	160 kg
	ECO loading capacity	160 kg
Finishes	Stainless steel (ER)	■
	ER polished	◘
	PVD coating (brass)	◘
	PVD coating in RAL colours	◘
Reception elements Page 574	For upright standing pillars	OBX-3001-3D
	For timber frames	OBX-3002-3D
	For steel frames	OBX-3011-3D
		OBX-3012-3D
	For aluminium frames	OBX-3021-3D

■ Yes - No ◘ On request

Dimension drawing

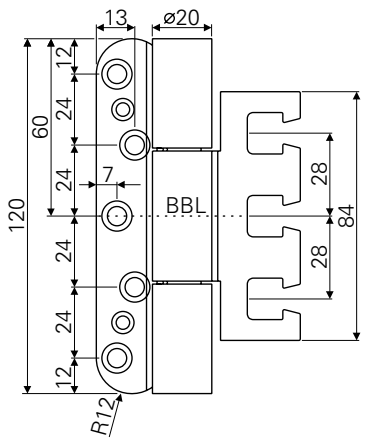

Milling drawing

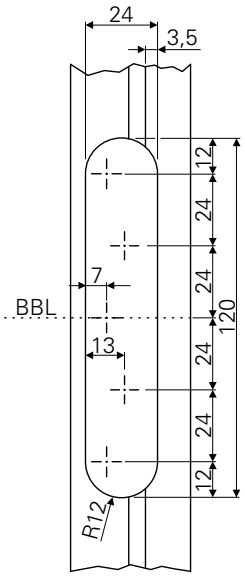

Top view

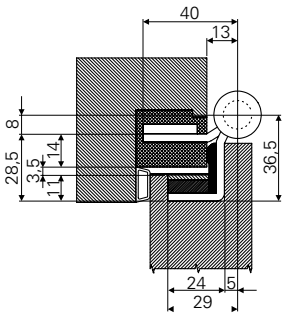

Swissdoor ApS • Stenhuggervej 2 • 5471 Søndersø • Danmark Telefon +45 86 28 00 00 • mail@swissdoor.dk • www.swissdoor.dk

PRODUCT FAMILY ▪ MORTISE REBATED DOOR 3D HINGE

OBX-20-1531/160.ER
OBX-20-1531/120.ER

OBX-20-1532/160.ER

OBX-20-1951/160.ER
OBX-20-1951/120.ER

Description

ECO **project hinge OBX-20-1532/120 leaf gasket (FD)**

- For rebated doors on wooden, steel or aluminium frames
- With OBX adjustable frame box adjustable in three dimensions
- Inner, firmly rotating axis
- Wear and maintenance-free ball bearing technology
- Suitable for fire doors
- Can be used DIN left and DIN right without modification

ER F EN 1935 CE Rost frei

OBX-20-1532 mortise rebated door 3D hinge leaf gasket	Dimensions	Article number
OBX-20-1532.FD/120.ER	Ø 20 x 120 mm	459132.46

Swissdoor ApS • Stenhuggervej 2 • 5471 Søndersø • Danmark Telefon +45 86 28 00 00 • mail@swissdoor.dk • www.swissdoor.dk

Project hinges ▪ OBX-20 ▪ Mortise rebated door 3D hinge ▪ Flush with the adjacent areas

OBX-20-1951/160

Product characteristics		
Size		160 mm
Ø Barrel diameter		20 mm
Material thickness		3,5 mm
Screws		5 x 50 mm
DIN left / DIN right		■
Milling diameter		24 mm
Milling length		160 mm
Milling depth		3,5 mm
Door types	Rebated	■
	Flush with the adjacent areas	■
Frame types	Wood	■
	Steel	■
	Aluminium	■
Suitable for fire doors	F	■
Loading capacity Class 14 (maximum door load)	EN 1935 CE	■
	Norm	160 kg
	ECO loading capacity	300 kg
Finishes	Stainless steel (ER)	■
	ER polished	◘
	PVD coating (brass)	◘
	PVD coating in RAL colours	◘
Reception elements Page 574	For upright standing pillars	OBX-3001-3D
	For timber frames	OBX-3002-3D
	For steel frames	OBX-3011-3D
		OBX-3012-3D
	For aluminium frames	OBX-3021-3D

■ Yes - No ◘ On request

Dimension drawing

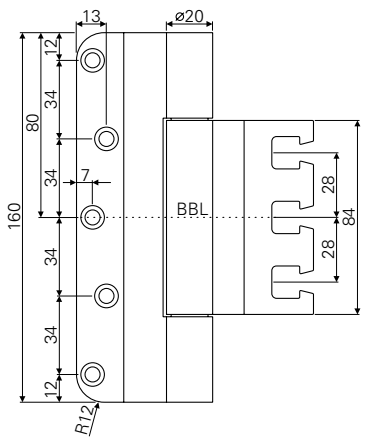

Milling drawing

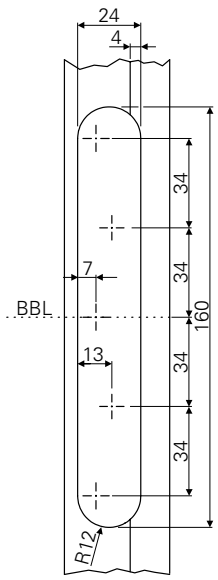

Top view

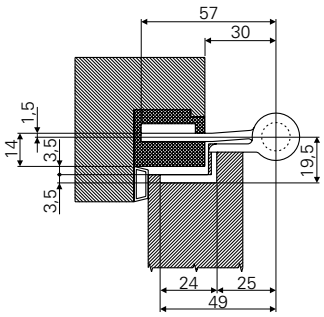

Swissdoor ApS • Stenhuggervej 2 • 5471 Søndersø • Danmark Telefon +45 86 28 00 00 • mail@swissdoor.dk • www.swissdoor.dk

PRODUCT FAMILY ▪ MORTISE REBATED DOOR 3D HINGE

OBX-20-1531/160.ER
OBX-20-1531/120.ER

OBX-20-1532/160.ER
OBX-20-1532/120.ER

OBX-20-1951/160.ER

Description

ECO **project hinge OBX-20-1951/160**

- For rebated doors on wooden, steel or aluminium frames
- With OBX adjustable frame box adjustable in three dimensions
- Inner, firmly rotating axis
- Wear and maintenance-free ball bearing technology
- Suitable for fire doors
- Can be used DIN left and DIN right without modification

ER F EN 1935 CE Rost frei

OBX-20-1532 **mortise rebated door 3D hinge** **Flush with the adjacent areas**	Dimensions	Article number
OBX-20-1951/160.ER	Ø 20 x 160 mm	459251.46

The perfect casting technology
of ECO provides a perfect,
closed reception of the
roll - and a best possible
and free-of-play force distribution.

Project hinges ▪ OBX-20 ▪ Mortise rebated door 3D hinge ▪ Flush with the adjacent areas

OBX-20-1951/120

Product characteristics		
Size		120 mm
Ø Barrel diameter		20 mm
Material thickness		3,5 mm
Screws		5 x 50 mm
DIN left / DIN right		■
Milling diameter		24 mm
Milling length		120 mm
Milling depth		3,5 mm
Door types	Rebated	■
	Flush with the adjacent areas	■
Frame types	Wood	■
	Steel	■
	Aluminium	■
Suitable for fire doors	F	■
Loading capacity Class 14 (maximum door load)	EN 1935 CE	■
	Norm	160 kg
	ECO loading capacity	160 kg
Finishes	Stainless steel (ER)	■
	ER polished	◘
	PVD coating (brass)	◘
	PVD coating in RAL colours	◘
Reception elements Page 574	For upright standing pillars	OBX-3001-3D
	For timber frames	OBX-3002-3D
	For steel frames	OBX-3011-3D
		OBX-3012-3D
	For aluminium frames	OBX-3021-3D

O Yes - No ◘ On request

Dimension drawing

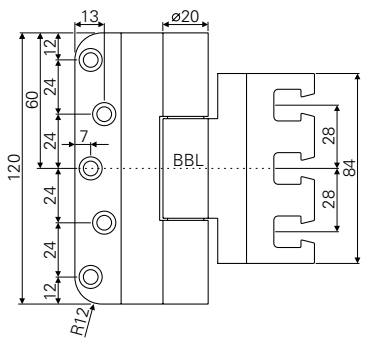

Milling drawing

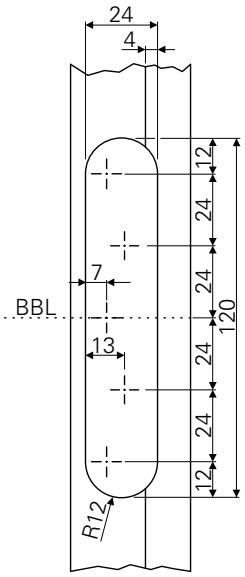

Top view

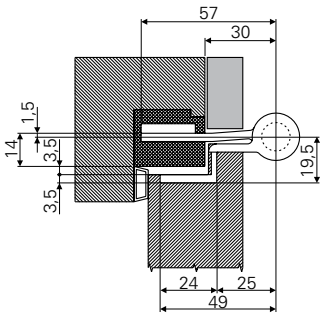

Swissdoor ApS • Stenhuggervej 2 • 5471 Søndersø • Danmark Telefon +45 86 28 00 00 • mail@swissdoor.dk • www.swissdoor.dk

PRODUCT FAMILY ▪ MORTISE REBATED DOOR 3D HINGE

OBX-20-1531/160.ER
OBX-20-1531/120.ER

OBX-20-1532/160.ER
OBX-20-1532/120.ER

OBX-20-1951/160.ER

Description

ECO **project hinge OBX-20-1951/120**

- For rebated doors on wooden, steel or aluminium frames
- With OBX adjustable frame box adjustable in three dimensions
- Inner, firmly rotating axis
- Wear and maintenance-free ball bearing technology
- Suitable for fire doors
- Can be used DIN left and DIN right without modification

ER F EN 1935 CE Rost frei

OBX-20-1951 **mortise rebated door 3D hinge** **Flush with the adjacent areas**	Dimensions	Article number
OBX-20-1951/120.ER	Ø 20 x 120 mm	459151.46

Swissdoor ApS • Stenhuggervej 2 • 5471 Søndersø • Danmark Telefon +45 86 28 00 00 • mail@swissdoor.dk • www.swissdoor.dk

OBX-20-2541/160

Product characteristics		
Size		160 mm
Ø Barrel diameter		20 mm
Material thickness		3,5 mm
Screws		5 x 50 mm
DIN left / DIN right		■
Milling diameter		24 mm
Milling length		160 mm
Milling depth		3,5 mm
Door types	Unrebated	■
	Double rebated	-
Frame types	Wood	■
	Steel	■
	Aluminium	■
Suitable for fire doors	F	■
Loading capacity Class 14 (maximum door load)	EN 1935 CE	■
	Norm	160 kg
	ECO loading capacity	300 kg
Finishes	Stainless steel (ER)	■
	ER polished	◘
	PVD coating (brass)	◘
	PVD coating in RAL colours	◘
Reception elements Page 574	For upright standing pillars	OBX-3001-3D
	For timber frames	OBX-3002-3D
	For steel frames	OBX-3011-3D
		OBX-3012-3D
	For aluminium frames	OBX-3021-3D

■ Yes - No ◘ On request

Dimension drawing

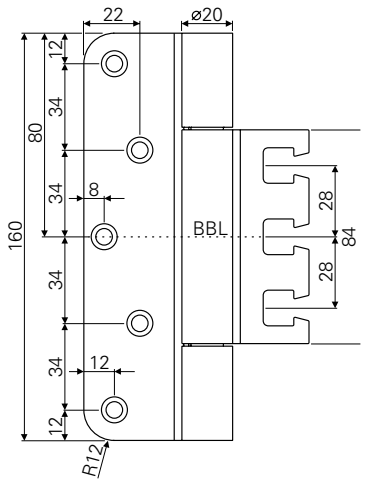

Milling drawing

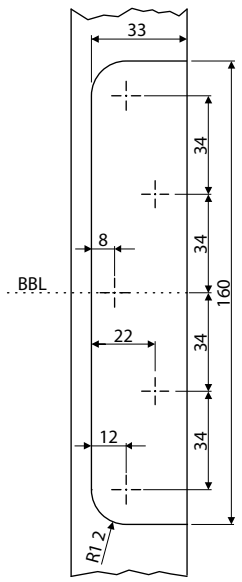

Top view

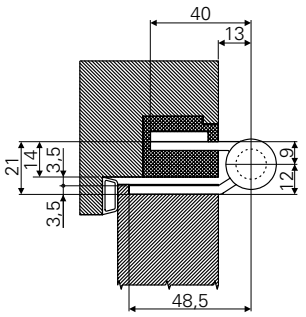

PRODUCT FAMILY ▪ MORTISE FLUSH DOOR 3D HINGE

OBX-20-2541/120.ER

OBX-20-2542/160.ER
OBX-20-2542/120.ER

Description

ECO **project hinge OBX-20-2541/160**

- For unrebated doors on wooden, steel or aluminium frames
- With OBX adjustable frame box adjustable in three dimensions
- Inner, firmly rotating axis
- Wear and maintenance-free ball bearing technology
- Suitable for fire doors
- Can be used DIN left and DIN right without modification

ER F EN 1935 CE Rost frei

OBX-20-2541 mortise flush door 3D hinge	Dimensions	Article number
OBX-20-2541/160.ER	Ø 20 x 160 mm	459241.46

OBX-20-2541/120

Product characteristics		
Size		120 mm
Ø Barrel diameter		20 mm
Material thickness		3,5 mm
Screws		5 x 50 mm
DIN left / DIN right		■
Milling diameter		24 mm
Milling length		120 mm
Milling depth		3,5 mm
Door types	Unrebated	■
	Double rebated	-
Frame types	Wood	■
	Steel	■
	Aluminium	■
Suitable for fire doors	F	■
Loading capacity Class 14 (maximum door load)	EN 1935 CE	■
	Norm	160 kg
	ECO loading capacity	200 kg
Finishes	Stainless steel (ER)	■
	ER polished	◘
	PVD coating (brass)	◘
	PVD coating in RAL colours	◘
Reception elements page 574	For upright standing pillars	OBX-3001-3D
	For timber frames	OBX-3002-3D
	For steel frames	OBX-3011-3D
		OBX-3012-3D
	For aluminium frames	OBX-3021-3D

■ Yes - No ◘ On request

Dimension drawing

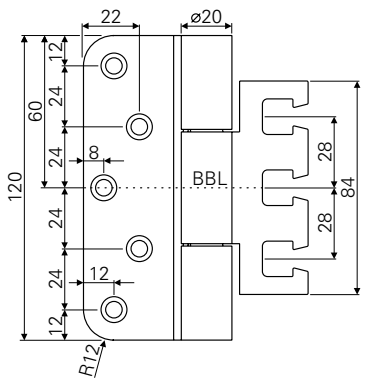

Milling drawing

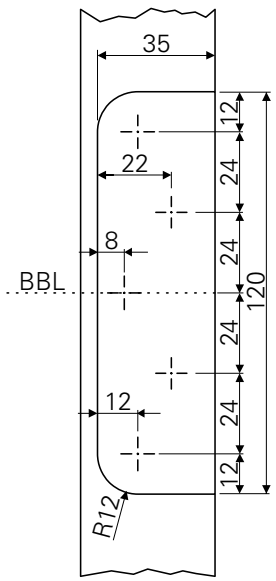

Top view

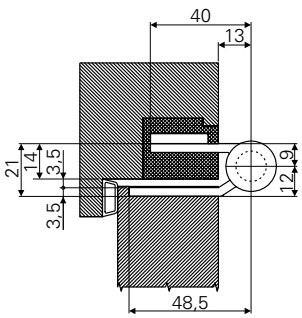

PRODUCT FAMILY ▪ MORTISE FLUSH DOOR 3D HINGE

OBX-20-2541/160.ER

OBX-20-2542/160.ER
OBX-20-2542/120.ER

Description

ECO **project hinge OBX-20-2541/120**

- For unrebated doors on wooden, steel or aluminium frames
- With OBX adjustable frame box adjustable in three dimensions
- Inner, firmly rotating axis
- Wear and maintenance-free ball bearing technology
- Suitable for fire doors
- Can be used DIN left and DIN right without modification

ER F EN 1935 CE Rost frei

OBX-20-2541 mortise flush door 3D hinge	Dimensions	Article number
OBX-20-2541/120.ER	Ø 20 x 120 mm	459141.46

Swissdoor ApS • Stenhuggervej 2 • 5471 Søndersø • Danmark Telefon +45 86 28 00 00 • mail@swissdoor.dk • www.swissdoor.dk

Project hinges ▪ OBX-20 ▪ Mortise flush door 3D hinge ▪ Double rebated

OBX-20-2542/160

Product characteristics		
Size		160 mm
Ø Barrel diameter		20 mm
Material thickness		3,5 mm
Screws		5 x 50 mm
DIN left / DIN right		■
Milling diameter		24 mm
Milling length		160 mm
Milling depth		3,5 mm
Door types	Unrebated	■
	Double rebated	■
Frame types	Wood	■
	Steel	■
	Aluminium	■
Suitable for fire doors	F	■
Loading capacity Class 14 (maximum door load)	EN 1935 CE	■
	Norm	160 kg
	ECO loading capacity	300 kg
Finishes	Stainless steel (ER)	■
	ER polished	◘
	PVD coating (brass)	◘
	PVD coating in RAL colours	◘
Reception elements page 574	For upright standing pillars	OBX-3001-3D
	For timber frames	OBX-3002-3D
	For steel frames	OBX-3011-3D
		OBX-3012-3D
	For aluminium frames	OBX-3021-3D

■ Yes - No ◘ On request

Dimension drawing

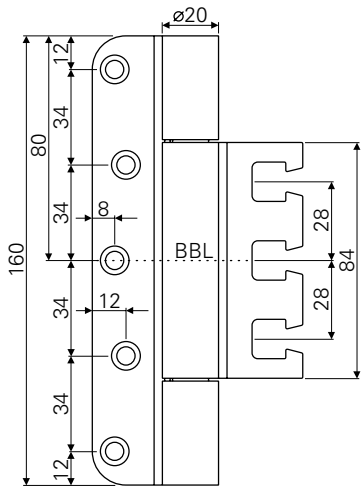

Milling drawing

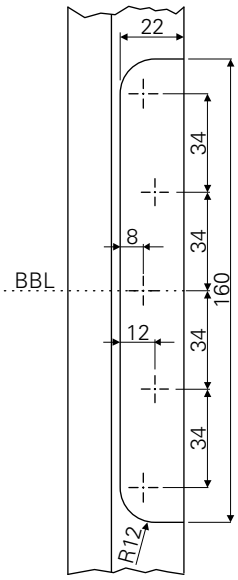

Top view

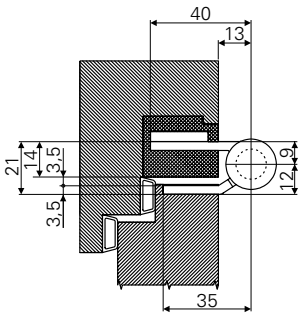

Swissdoor ApS • Stenhuggervej 2 • 5471 Søndersø • Danmark Telefon +45 86 28 00 00 • mail@swissdoor.dk • www.swissdoor.dk

PRODUCT FAMILY ▪ MORTISE FLUSH DOOR 3D HINGE

OBX-20-2541/160.ER
OBX-20-2541/120.ER

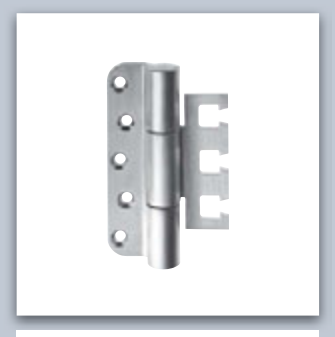

OBX-20-2542/120.ER

Description

ECO **project hinge OBX-20-2542/160**

- For mortise flush door 3D hinge, double rebated, on wooden, steel or aluminium frames
- With OBX adjustable frame box adjustable in three dimensions
- Inner, firmly rotating axis
- Wear and maintenance-free ball bearing technology
- Suitable for fire doors
- Can be used DIN left and DIN right without modification

ER F EN 1935 CE Rost frei

OBX-20-2542 mortise flush door 3D hinge double rebated	Dimensions	Article number
OBX-20-2542/160.ER	Ø 20 x 160 mm	459242.46

ECO Schulte shows attention to detail by brushing the surface of the stainless steel hinges lengthwise. Thus, the brushing pattern perfectly matches the handle sets delivered by ECO.

Project hinges ▪ OBX-20 ▪ Mortise flush door 3D hinge ▪ Double rebated

OBX-20-2542/120

Product characteristics		
Size		120 mm
Ø Barrel diameter		20 mm
Material thickness		3,5 mm
Screws		5 x 50 mm
DIN left / DIN right		■
Milling diameter		24 mm
Milling length		120 mm
Milling depth		3,5 mm
Door types	Unrebated	■
	Double rebated	■
Frame types	Wood	■
	Steel	■
	Aluminium	■
Suitable for fire doors	F	■
Loading capacity Class 14 (maximum door load)	EN 1935 CE	■
	Norm	160 kg
	ECO loading capacity	200 kg
Finishes	Stainless steel (ER)	■
	ER polished	◘
	PVD coating (brass)	◘
	PVD coating in RAL colours	◘
Reception elements page 574	For upright standing pillars	OBX-3001-3D
	For timber frames	OBX-3002-3D
	For steel frames	OBX-3011-3D
		OBX-3012-3D
	For aluminium frames	OBX-3021-3D

■ Yes - No ◘ On request

Dimension drawing

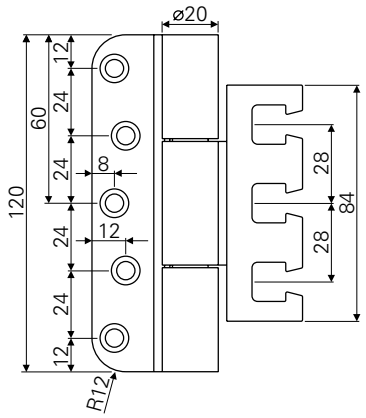

Milling drawing

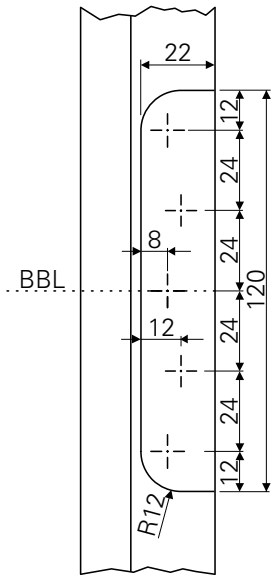

Top view

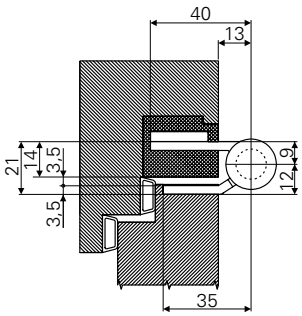

Swissdoor ApS • Stenhuggervej 2 • 5471 Søndersø • Danmark Telefon +45 86 28 00 00 • mail@swissdoor.dk • www.swissdoor.dk

PRODUCT FAMILY ▪ MORTISE FLUSH DOOR 3D HINGE

OBX-20-2541/160.ER

OBX-20-2542/160.ER
OBX-20-2542/120.ER

Description

ECO **project hinge OBX-20-2542/120**

- For mortise flush door 3D hinge, double rebated, on wooden, steel or aluminium frames
- With OBX adjustable frame box adjustable in three dimensions
- Inner, firmly rotating axis
- Wear and maintenance-free ball bearing technology
- Suitable for fire doors
- Can be used DIN left and DIN right without modification

ER F EN 1935 CE Rost frei

OBX-20-2542 unrebated double rebated	Dimensions	Article number
OBX-20-2542/120.ER	Ø 18 x 120 mm	459142.46

Swissdoor ApS • Stenhuggervej 2 • 5471 Søndersø • Danmark Telefon +45 86 28 00 00 • mail@swissdoor.dk • www.swissdoor.dk

Swissdoor ApS • Stenhuggervej 2 • 5471 Søndersø • Danmark Telefon +45 86 28 00 00 • mail@swissdoor.dk • www.swissdoor.dk

SWISSDOOR
DØRTEKNIK FOR PROFESSIONELLE

ECO

Project hinges
OBX-18

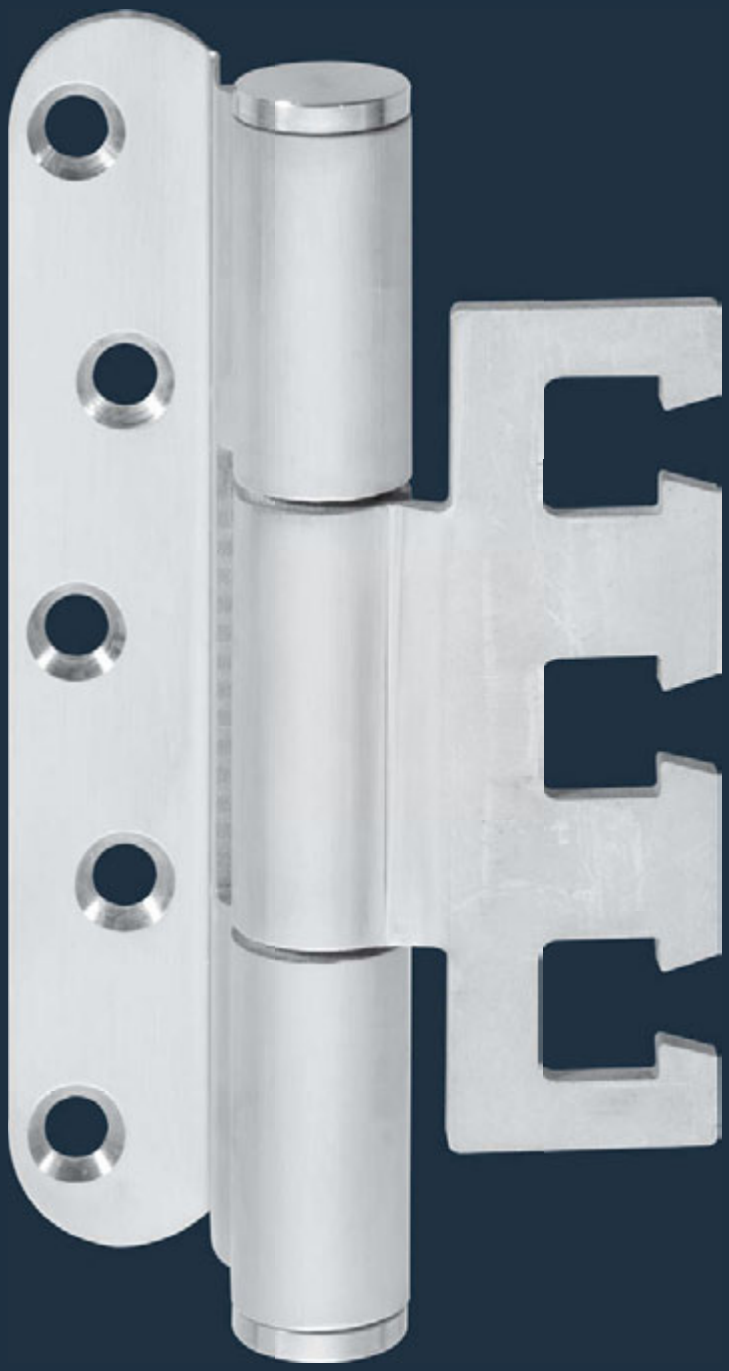

■ SYSTEM TECHNOLOGY FOR THE DOOR

Project hinges ▪ OBX-18 ▪ Mortise rebated door 3D hinge

OBX-18-1531/160

Product characteristics		
Size		160 mm
Ø Barrel diameter		18 mm
Material thickness		3 mm / 3,5 mm
Screws		5 x 50 mm
DIN left / DIN right		■
Milling diameter		24 mm
Milling length		160 mm
Milling depth		3 mm
Door types	Rebated	■
	Unrebated	-
Frame types	Wood	■
	Steel	■
	Aluminium	■
Suitable for fire doors	F	■
Loading capacity Class 11 (maximum door load)	EN 1935 CE	■
	Norm	80 kg
	ECO loading capacity	160 kg
Finishes	Stainless steel (ER)	■
	Steel satin nickel plated	■
	Steel zinc plated	■
Reception elements Page 574	For upright standing pillars	OBX-3001-3D
	For timber frames	OBX-3002-3D
	For steel frames	OBX-3011-3D
		OBX-3012-3D
	For aluminium frames	OBX-3021-3D

■ Yes - No ◘ On request

Dimension drawing

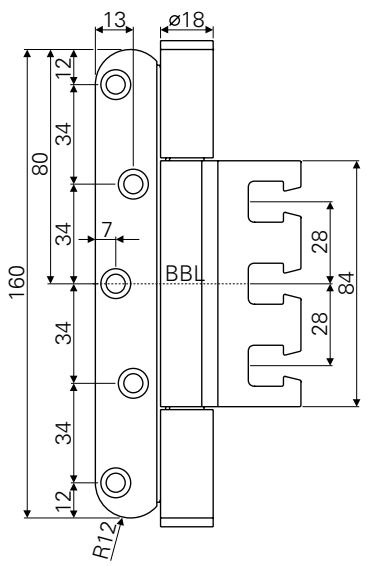

Milling drawing

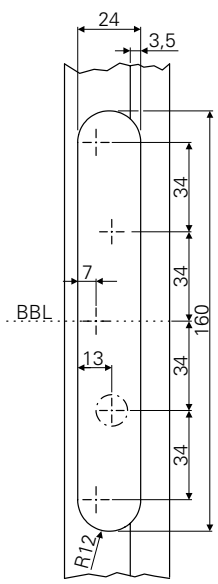

Top view

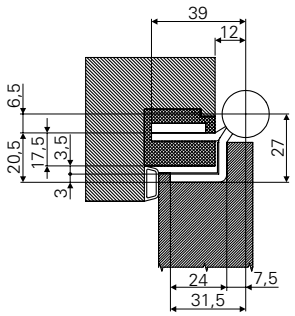

Swissdoor ApS • Stenhuggervej 2 • 5471 Søndersø • Danmark Telefon +45 86 28 00 00 • mail@swissdoor.dk • www.swissdoor.dk

PRODUCT FAMILY ▪ MORTISE REBATED DOOR 3D HINGE

OBX-18-1531/120.ER

OBX-18-1532/160.ER

Description

ECO **project hinge OBX-18-1531/160**

- For rebated doors on wooden, steel or aluminium frames
- With OBX adjustable frame box adjustable in three dimensions
- Inner, firmly rotating axis
- Wear and maintenance-free ball bearing technology
- Suitable for fire doors
- Can be used DIN left and DIN right without modification

F EN 1935 CE

OBX-18-1531 mortise rebated door 3D hinge	Dimensions	Article number
OBX-18-1531/160.ER	Ø 18 x 160 mm	459431.46
OBX-18-1531/160.St.Ni	Ø 18 x 160 mm	459431.42
OBX-18-1531/160.Zk	Ø 18 x 160 mm	459431.43

Project hinges ▪ OBX-18 ▪ Mortise rebated door 3D hinge

OBX-18-1531/120

Product characteristics		
Size		120 mm
Ø Barrel diameter		18 mm
Material thickness		3 mm / 3,5 mm
Screws		5 x 50 mm
DIN left / DIN right		■
Milling diameter		24 mm
Milling length		128 mm
Milling depth		3 mm
Door types	Rebated	■
	Unrebated	-
Frame types	Wood	■
	Steel	■
	Aluminium	■
Suitable for fire doors	F	■
Loading capacity Class 11 (maximum door load)	EN 1935 CE	■
	Norm	80 kg
	ECO loading capacity	120 kg
Finishes	Stainless steel (ER)	■
	Steel satin nickel plated	■
	Steel zinc plated	■
Reception elements Page 574	For upright standing pillars	OBX-3001-3D
	For timber frames	OBX-3002-3D
	For steel frames	OBX-3011-3D
		OBX-3012-3D
	For aluminium frames	OBX-3021-3D

■ Yes - No ◘ On request

Dimension drawing

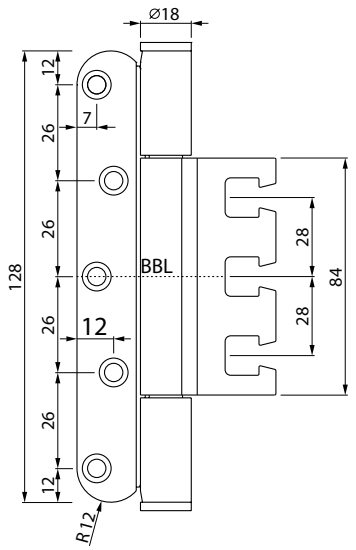

Milling drawing

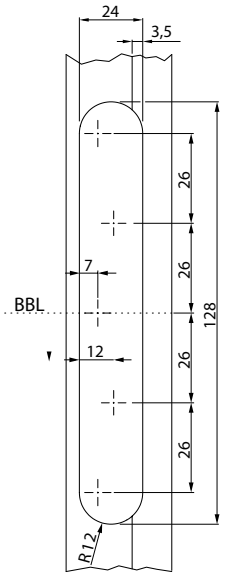

Top view

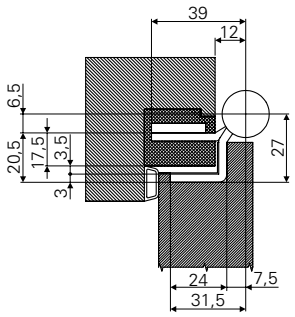

Swissdoor ApS • Stenhuggervej 2 • 5471 Søndersø • Danmark Telefon +45 86 28 00 00 • mail@swissdoor.dk • www.swissdoor.dk

PRODUCT FAMILY ▪ MORTISE REBATED DOOR 3D HINGE

OBX-18-1531/160.ER

OBX-18-1532/160.ER

Description

ECO **project hinge OBX-18-1531/120**

- For rebated doors on wooden, steel or aluminium frames
- With OBX adjustable frame box adjustable in three dimensions
- Inner, firmly rotating axis
- Wear and maintenance-free ball bearing technology
- Suitable for fire doors
- Can be used DIN left and DIN right without modification

F EN 1935 CE

OBX-18-1531 mortise rebated door 3D hinge	Dimensions	Article number
OBX-18-1531/120.ER	Ø 18 x 120 mm	459331.46
OBX-18-1531/120.St.Ni	Ø 18 x 120 mm	459331.42
OBX-18-1531/120.ER	Ø 18 x 120 mm	459331.43

Swissdoor ApS • Stenhuggervej 2 • 5471 Søndersø • Danmark Telefon +45 86 28 00 00 • mail@swissdoor.dk • www.swissdoor.dk

Project hinges ▪ OBX-18 ▪ Mortise rebated door 3D hinge ▪ Leaf gasket

OBX-18-1532/160

Product characteristics		
Size		160 mm
Ø Barrel diameter		18 mm
Material thickness		3 mm / 3,5 mm
Screws		5 x 50 mm
DIN left / DIN right		■
Milling diameter		24 mm
Milling length		160 mm
Milling depth		3 mm
Door types	Rebated	■
	Unrebated	-
Frame types	Wood	■
	Steel	■
	Aluminium	■
Suitable for fire doors	F	■
Loading capacity Class 11 (maximum door load)	EN 1935 CE	■
	Norm	80 kg
	ECO loading capacity	160 kg
Finishes	Stainless steel (ER)	■
	Steel satin nickel plated	■
	Steel zinc plated	■
Reception elements Page 574	For upright standing pillars	OBX-3001-3D
	For timber frames	OBX-3002-3D
	For steel frames	OBX-3011-3D
		OBX-3012-3D
	For aluminium frames	OBX-3021-3D

■ Yes - No ◘ On request

Dimension drawing

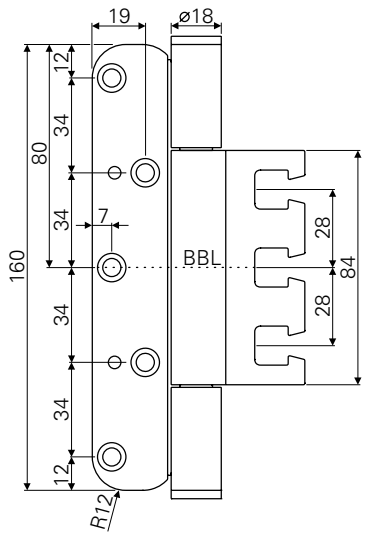

Milling drawing

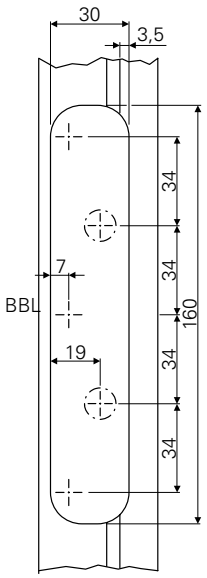

Top view

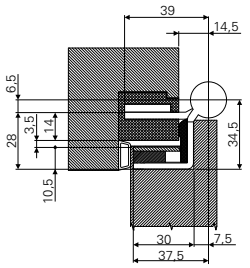

Swissdoor ApS • Stenhuggervej 2 • 5471 Søndersø • Danmark Telefon +45 86 28 00 00 • mail@swissdoor.dk • www.swissdoor.dk

PRODUCT FAMILY ▪ MORTISE REBATED DOOR 3D HINGE

OBX-18-1531/160.ER
OBX-18-1531/120.ER

Description

ECO **project hinge OBX-18-1532/160**

- For rebated doors on wooden, steel or aluminium frames
- With OBX adjustable frame box adjustable in three dimensions
- Inner, firmly rotating axis
- Wear and maintenance-free ball bearing technology
- Suitable for fire doors
- Can be used DIN left and DIN right without modification

ER F EN 1935 CE Rost frei

OBX-18-1532 mortise rebated door 3D hinge leaf gasket	Dimensions	Article number
OBX-18-1532/160.ER	Ø 18 x 160 mm	45932.46

ECO Schulte project hinges are playing in their own league in regards to precision and aesthetics. The defined edge of the reception area provides best-possible force distribution and fitting accuracy.

Project hinges ▪ OBX-18 ▪ Mortise flush door 3D hinge

OBX-18-2541/160

Product characteristics		
Size		160 mm
Ø Barrel diameter		18 mm
Material thickness		3 mm / 3,5 mm
Screws		5 x 50 mm
DIN left / DIN right		■
Milling diameter		24 mm
Milling length		160 mm
Milling depth		3 mm
Door types	Rebated	-
	Unrebated	■
Frame types	Wood	■
	Steel	■
	Aluminium	■
Suitable for fire doors	F	■
Loading capacity Class 11 (maximum door load)	EN 1935 CE	■
	Norm	80 kg
	ECO loading capacity	160 kg
Finishes	Stainless steel (ER)	■
	Steel satin nickel plated	■
	Steel zinc plated	■
Reception elements Page 574	For upright standing pillars	OBX-3001-3D
	For timber frames	OBX-3002-3D
	For steel frames	OBX-3011-3D
		OBX-3012-3D
	For aluminium frames	OBX-3021-3D

■ Yes - No ◘ On request

Dimension drawing

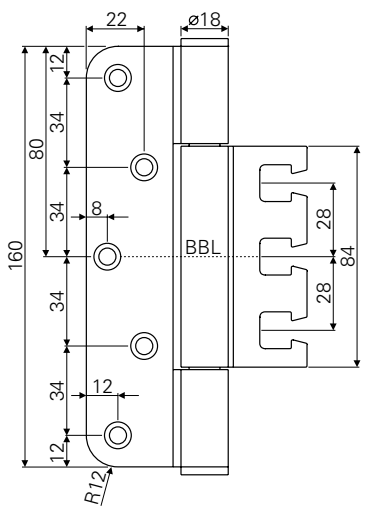

Milling drawing

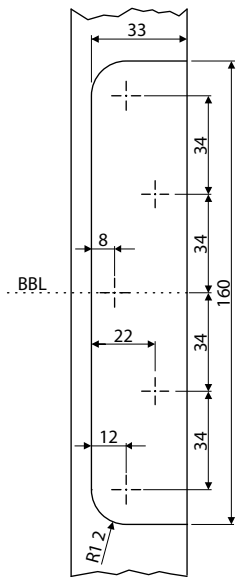

Top view

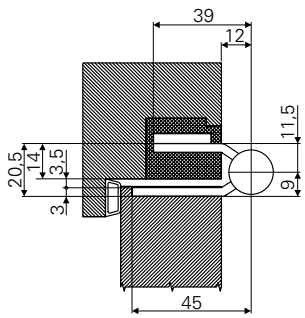

Swissdoor ApS • Stenhuggervej 2 • 5471 Søndersø • Danmark Telefon +45 86 28 00 00 • mail@swissdoor.dk • www.swissdoor.dk

PRODUCT FAMILY ▪ MORTISE FLUSH DOOR 3D HINGE

OBX-18-2541/120.ER

Description

ECO **project hinge OBX-18-2541/160**

- For rebated doors on wooden, steel or aluminium frames
- With OBX adjustable frame box adjustable in three dimensions
- Inner, firmly rotating axis
- Wear and maintenance-free ball bearing technology
- Suitable for fire doors
- Can be used DIN left and DIN right without modification

F EN 1935 CE

OBX-18-2541 mortise flush door 3D hinge	Dimensions	Article number
OBX-18-2541/160.ER	Ø 18 x 160 mm	459441.46
OBX-18-2541/160.St.Ni	Ø 18 x 160 mm	459441.42
OBX-18-2541/160.Zk	Ø 18 x 160 mm	459441.43

Swissdoor ApS • Stenhuggervej 2 • 5471 Søndersø • Danmark Telefon +45 86 28 00 00 • mail@swissdoor.dk • www.swissdoor.dk

Project hinges ▪ OBX-18 ▪ Mortise flush door 3D hinge

OBX-18-2541/120

Product characteristics		
Size		120 mm
Ø Barrel diameter		18 mm
Material thickness		3 mm / 3,5 mm
Screws		5 x 50 mm
DIN left / DIN right		■
Milling diameter		24 mm
Milling length		120 mm
Milling depth		3 mm
Door types	Rebated	-
	Unrebated	■
Frame types	Wood	■
	Steel	■
	Aluminium	■
Suitable for fire doors	F	■
Loading capacity Class 11 (maximum door load)	EN 1935 CE	■
	Norm	80 kg
	ECO loading capacity	120 kg
Finishes	Stainless steel (ER)	■
	Steel satin nickel plated	■
	Steel zinc plated	■
Reception elements Page 574	For upright standing pillars	OBX-3001-3D
	For timber frames	OBX-3002-3D
	For steel frames	OBX-3011-3D
		OBX-3012-3D
	For aluminium frames	OBX-3021-3D

■ Yes - No ◘ On request

Dimension drawing

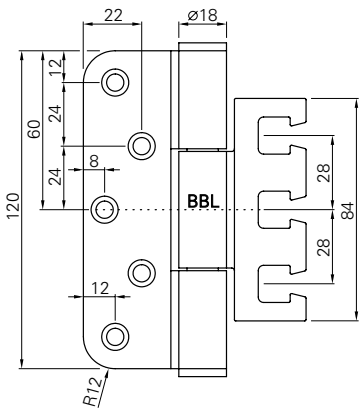

Milling drawing

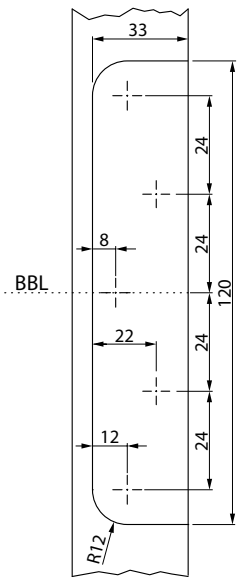

Top view

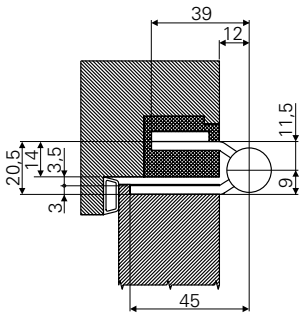

Swissdoor ApS • Stenhuggervej 2 • 5471 Søndersø • Danmark Telefon +45 86 28 00 00 • mail@swissdoor.dk • www.swissdoor.dk

PRODUCT FAMILY ▪ MORTISE FLUSH DOOR 3D HINGE

OBX-18-2541/160.ER

Description

ECO **project hinge OBX-18-2541/120**

- For unrebated doors on wooden, steel or aluminium frames
- With OBX adjustable frame box adjustable in three dimensions
- Inner, firmly rotating axis
- Wear and maintenance-free ball bearing technology
- Suitable for fire doors
- Can be used DIN left and DIN right without modification

F EN 1935 CE

OBX-18-2541 mortise flush door 3D hinge	Dimensions	Article number
OBX-18-2541/120.ER	Ø 18 x 120 mm	459341.46
OBX-18-2541/120.St.Ni	Ø 18 x 120 mm	459341.42
OBX-18-2541/120.ER	Ø 18 x 120 mm	459341.43

Swissdoor ApS • Stenhuggervej 2 • 5471 Søndersø • Danmark Telefon +45 86 28 00 00 • mail@swissdoor.dk • www.swissdoor.dk

SWISSDOOR
DØRTEKNIK FOR PROFESSIONELLE

ECO

Project hinges
OBN

■ SYSTEM TECHNOLOGY FOR THE DOOR

OBN-20-4141/160

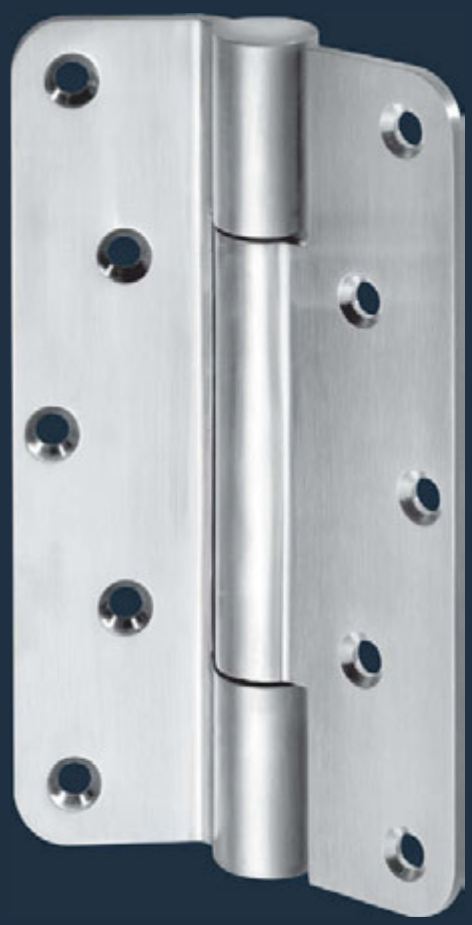

Product characteristics		
Size		120 mm
Ø Barrel diameter		20 mm
Material thickness		3,5 mm
Screws		5 x 50 mm
DIN left / DIN right		■
Milling diameter		24 mm
Milling length		160 mm
Milling depth		3,5 mm
Door types	Rebated	-
	Unrebated	■
Frame types	Wood	■
Suitable for fire doors	F	■
Loading capacity Class 14 (maximum door load)	EN 1935 CE	■
	Norm	160 kg
	ECO loading capacity	300 kg
Finishes	Stainless steel (ER)	■
	ER polished	◘
	PVD coating (brass)	◘
	PVD coating in RAL colours	◘

■ Yes - No ◘ On request

Dimension drawing

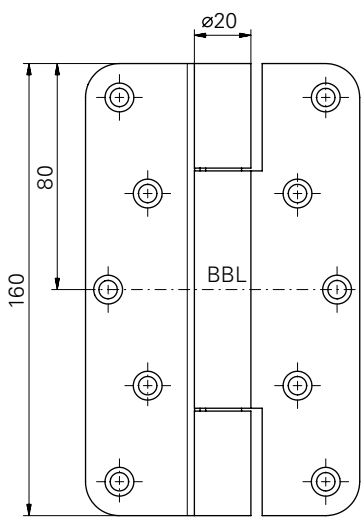

Top view

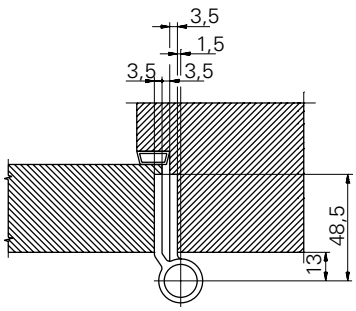

Swissdoor ApS • Stenhuggervej 2 • 5471 Søndersø • Danmark Telefon +45 86 28 00 00 • mail@swissdoor.dk • www.swissdoor.dk

Project hinges ▪ OBN-20 ▪ Mortise flush door hinge

Description

ECO **project hinge OBN-20-4141/160**

- For unrebated doors on upright standing pillars
- Inner, firmly rotating axis
- Wear and maintenance-free ball bearing technology
- Suitable for fire doors
- Can be used DIN left and DIN right without modification

ER F EN 1935 CE Rost frei

OBN-20-4141 **mortise flush door hinge** **for upright standing pillars**	Dimensions	Article number
OBN-20-4141/160.ER	Ø 20 x 160 mm	459641.46

Project hinges ▪ OBN-18 ▪ Mortise flush door hinge

OBN-18-4141/160

Product characteristics		
Size		160 mm
Ø Barrel diameter		18 mm
Material thickness		3 mm / 3,5 mm
Screws		5 x 50 mm
DIN left / DIN right		■
Milling diameter		24 mm
Milling length		160 mm
Milling depth		3 mm / 3,5 mm
Door types	Rebated	-
	Unrebated	■
Frame types	Wood	■
Suitable for fire doors	F	■
Loading capacity Class 11 (maximum door load)	EN 1935 CE	■
	Norm	80 kg
	ECO loading capacity	160 kg
Finishes	Stainless steel (ER)	■
	ER polished	◘
	PVD coating (brass)	◘
	PVD coating in RAL colours	◘

■ Yes - No ◘ On request

Dimension drawing

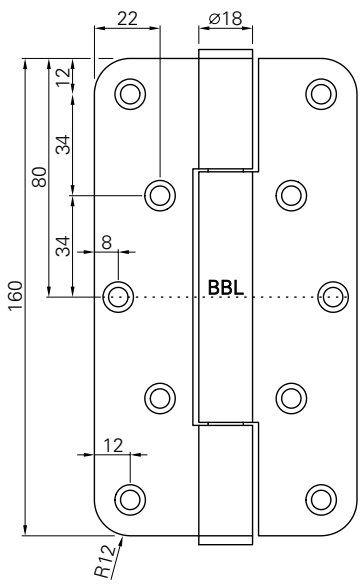

Top view

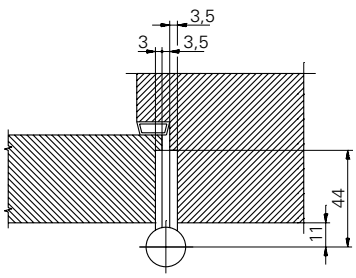

Swissdoor ApS • Stenhuggervej 2 • 5471 Søndersø • Danmark Telefon +45 86 28 00 00 • mail@swissdoor.dk • www.swissdoor.dk

PRODUCT FAMILY ▪ MORTISE FLUSH DOOR HINGE

OBN-18-4141/120.ER round

OBN-18-4141/120.ER square

Description

ECO **project hinge OBN-18-4141/160**

- For unrebated doors on upright standing pillars
- Inner, firmly rotating axis
- Wear and maintenance-free ball bearing technology
- Suitable for fire doors
- Can be used DIN left and DIN right without modification

F EN 1935 CE

OBX-18-4141 mortise flush door hinge	Dimensions	Article number
OBX-18-4141/160.ER	Ø 18 x 160 mm	459741.46
OBX-18-4141/160.St.Ni	Ø 18 x 160 mm	459741.42
OBX-18-4141/160.Zk	Ø 18 x 160 mm	459741.43

Project hinges ▪ OBN-18 ▪ Mortise flush door hinge

OBN-18-4141/120 round

Product characteristics		
Size		120 mm
Ø Barrel diameter		18 mm
Material thickness		3 mm / 3,5 mm
Screws		5 x 50 mm
DIN left / DIN right		■
Milling diameter		24 mm
Milling length		120 mm
Milling depth		3 mm / 3,5 mm
Door types	Rebated	-
	Unrebated	■
Frame types	Wood	■
Suitable for fire doors	F	■
Loading capacity Class 11 (maximum door load)	EN 1935 CE	■
	Norm	80 kg
	ECO loading capacity	120 kg
Finishes	Stainless steel (ER)	■
	ER polished	◘
	PVD coating (brass)	◘
	PVD coating in RAL colours	◘

■ Yes - No ◘ On request

Dimension drawing

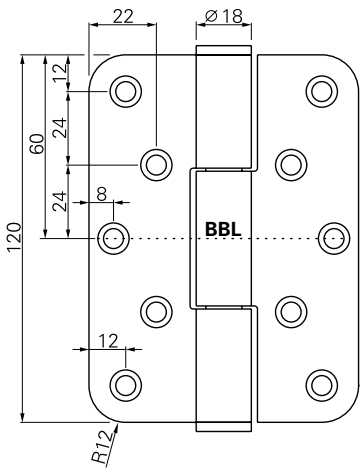

Top view

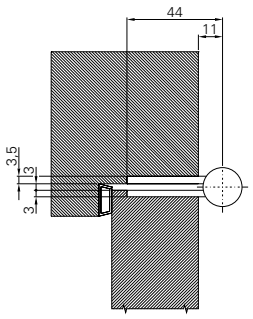

Swissdoor ApS • Stenhuggervej 2 • 5471 Søndersø • Danmark Telefon +45 86 28 00 00 • mail@swissdoor.dk • www.swissdoor.dk

PRODUCT FAMILY ▪ MORTISE FLUSH DOOR HINGE

OBN-18-4141/160.ER

OBN-18-4141/120.ER square

Description

ECO **project hinge OBN-18-4141/120 round**

- For unrebated doors on upright standing pillars
- Inner, firmly rotating axis
- Wear and maintenance-free ball bearing technology
- Suitable for fire doors
- Can be used DIN left and DIN right without modification

F EN 1935 CE

OBN-18-4141 mortise flush door hinge round	Dimensions	Article number
OBX-18-4141/120.ER	Ø 18 x 120 mm	459841.46
OBX-18-4141/120.St.Ni	Ø 18 x 120 mm	459841.42
OBX-18-4141/120.Zk	Ø 18 x 120 mm	459841.43

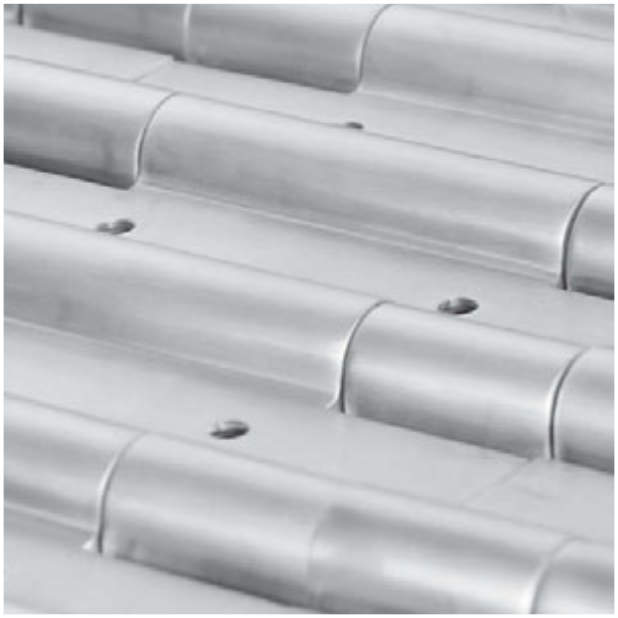

Project hinges ▪ OBN-18 ▪ Mortise flush door hinge

OBN-18-4141/120 square

Product characteristics		
Size		120 mm
Ø Barrel diameter		18 mm
Material thickness		3 mm / 3,5 mm
Screws		5 x 50 mm
DIN left / DIN right		■
Milling diameter		24 mm
Milling length		120 mm
Milling depth		3 mm / 3,5 mm
Door types	Rebated	-
	Unrebated	■
Frame types	Wood	■
	Steel	■
	Aluminium	■
Suitable for fire doors	F	■
Loading capacity Class 11 (maximum door load)	EN 1935 CE	■
	Norm	80 kg
	ECO loading capacity	120 kg
Finishes	Stainless steel (ER)	■
	ER polished	◘
	PVD coating (brass)	◘
	PVD coating in RAL colours	◘

■ Yes - No ◘ On request

Dimension drawing

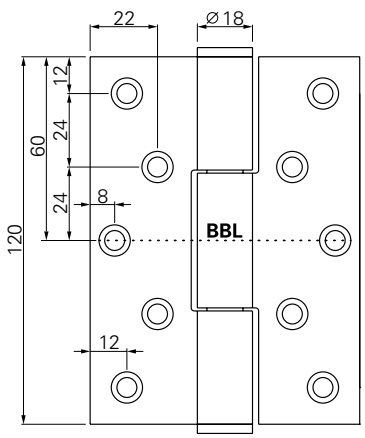

Top view

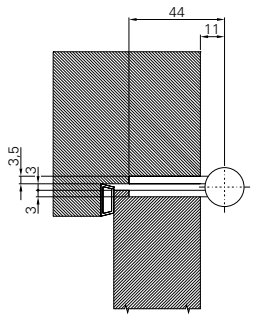

Swissdoor ApS • Stenhuggervej 2 • 5471 Søndersø • Danmark Telefon +45 86 28 00 00 • mail@swissdoor.dk • www.swissdoor.dk

PRODUCT FAMILY ▪ MORTISE FLUSH DOOR HINGE

OBN-18-4141/160.ER

OBN-18-4141/120.ER round

Description

ECO **project hinge OBN-18-4141/120 square**

- For unrebated doors on upright standing pillars
- Inner, firmly rotating axis
- Wear and maintenance-free ball bearing technology
- Suitable for fire doors
- Can be used DIN left and DIN right without modification

F EN 1935 CE

OBN-18-4141 mortise flush doory hinge for upright standing pillars square	Dimensions	Article number
OBX-18-4141/120.ER	Ø 18 x 120 mm	459843.46
OBX-18-4141/120.St.Ni	Ø 18 x 120 mm	459843.42
OBX-18-4141/120.Zk	Ø 18 x 120 mm	459843.43

Swissdoor ApS • Stenhuggervej 2 • 5471 Søndersø • Danmark Telefon +45 86 28 00 00 • mail@swissdoor.dk • www.swissdoor.dk

SWISSDOOR
DØRTEKNIK FOR PROFESSIONELLE

ECO

Adjustable frame boxes
Cover plates
Lifting lug

■ SYSTEM TECHNOLOGY FOR THE DOOR

Adjustable frame box ▪ OBX-3001-3D

Description

ECO-**Adjustable frame box OBX-3001-3D**

- Adjustable frame box for project hinges OBX in sizes 120 mm and 160 mm
- On upright standing pillar frames with rebated and unrebate doors
- Adjustable in three dimensions

  + / - 3 mm Side
  + / - 3 mm Height
  + / - 3 mm Pressure
- Surface: Steel zinc plated

Adjustable frame box for upright standing pillars OBX-3001-3D	Material	Article number
OBX-3001-3D	Steel zinc plated	459301.43

Advantages adjustable frame box
▪ Nylon-guided adjusting spindle supplies additional stability
▪ Nylon-guided push plate enables easy mounting. The insertion of the OBX hinge is simplified enormously.
▪ Adjustable in three dimensions The exact adjustment of the door is simplified.

Dimension drawing

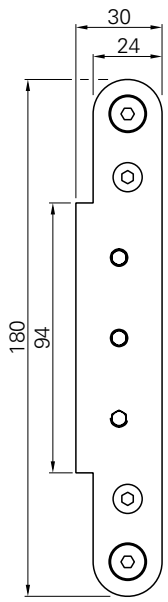

Milling drawing

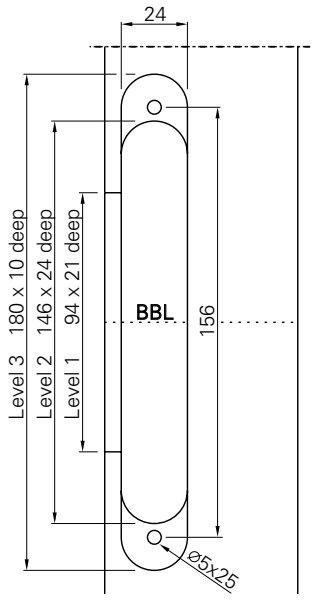

Swissdoor ApS • Stenhuggervej 2 • 5471 Søndersø • Danmark Telefon +45 86 28 00 00 • mail@swissdoor.dk • www.swissdoor.dk

Adjustable frame box ▪ OBX-3002-3D

Description

ECO-**Adjustable frame box OBX-3002-3D**

- Adjustable frame box for project hinges OBX in sizes 120 mm and 160 mm
- For timber frames with rebated and unrebated doors
- Adjustable in three dimensions
  - + / - 3 mm Side
  - + / - 3 mm Height
  - + / - 3 mm Pressure
- Surface: Steel zinc plated

Adjustable frame box for timber frames OBX-3002-3D	Material	Article number
OBX-3002-3D	Steel zinc plated	459302.43

Advantages adjustable frame box
▪ Nylon-guided adjusting spindle supplies additional stability
▪ Nylon-guided push plate enables easy mounting. The insertion of the OBX hinge is simplified enormously.
▪ Adjustable in three dimensions The exact adjustment of the door is simplified.

Dimension drawing

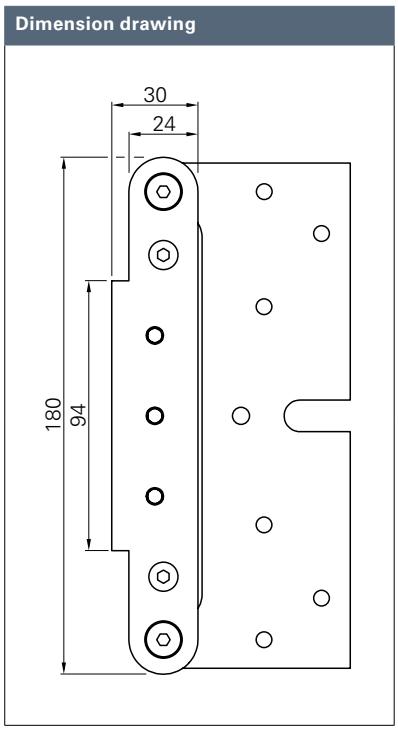

Milling drawing

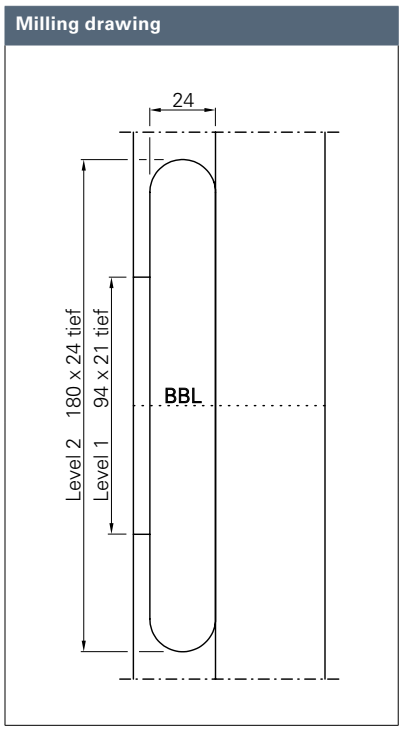

Adjustable frame box ▪ OBX-3011-3D

OBX-3011-3D

Description

ECO-**Adjustable frame box OBX-3011-3D**

- Adjustable frame box for project hinges OBX in sizes 120 mm and 160 mm
- On steel frames with rebated and unrebated doors
- Adjustable in three dimensions
  + / - 3 mm Side
  + / - 3 mm Height
  + / - 3 mm Pressure
- Surface: Steel zinc plated

Adjustable frame box for steel frames OBX-3011-3D	Material	Article number
OBX-3011-3D [1]	Steel zinc plated	459311.43
OBX-3012-3D [2]	Steel zinc plated	459312.43

[1] **Without welding points**

[2] **With welding points**

Advantages adjustable frame box
▪ Nylon-guided adjusting spindle supplies additional stability
▪ Nylon-guided push plate enables easy mounting. The insertion of the OBX hinge is simplified enormously.
▪ Adjustable in three dimensions The exact adjustment of the door is simplified.

Dimension drawing

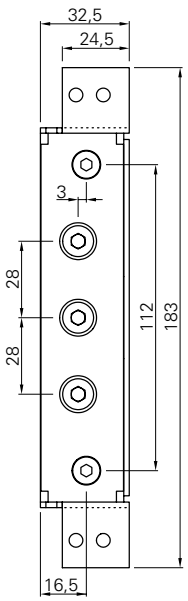

Dimension drawing

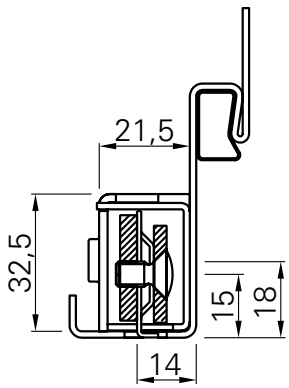

Swissdoor ApS • Stenhuggervej 2 • 5471 Søndersø • Danmark Telefon +45 86 28 00 00 • mail@swissdoor.dk • www.swissdoor.dk

Adjustable frame box ▪ OBX-3021-3D

Description

ECO-**Adjustable frame box OBX-3021-3D**

- Adjustable frame box for project hinges OBX in sizes 120 mm and 160 mm
- On aluminium frames with rebated and unrebated doors
- Adjustable in three dimensions
  - + / - 3 mm Side
  - + / - 3 mm Height
  - + / - 3 mm Pressure
- Surface: Steel zinc plated

Adjustable frame box for aluminium frames OBX-3021-3D	Material	Article number
OBX-3021-3D	Steel zinc plated	459321.43

Advantages adjustable frame box
▪ Nylon-guided adjusting spindle supplies additional stability
▪ Nylon-guided push plate enables easy mounting. The insertion of the OBX hinge is simplified enormously.
▪ Adjustable in three dimensions The exact adjustment of the door is simplified.

Dimension drawing

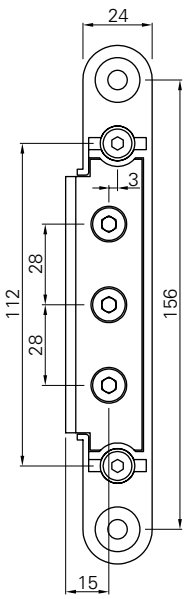

Dimension drawing

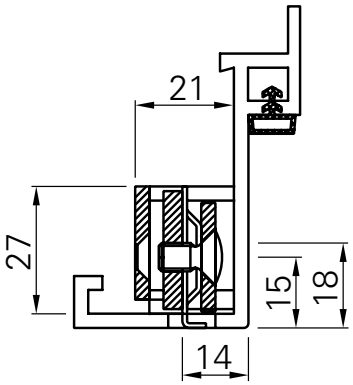

Cover plates for adjustable frame boxes

Illustration: Cover plates OBX-3096

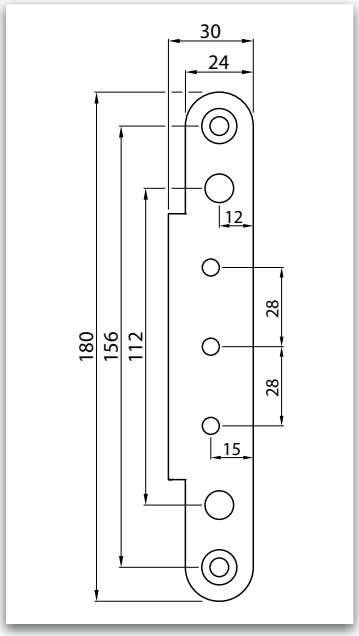

Dimension: Cover plates OBX-3096

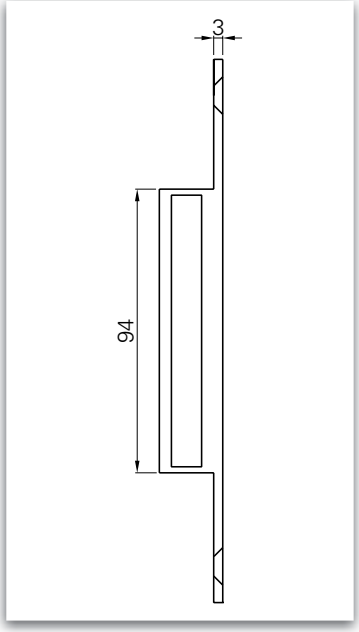

Dimension: Cover plates OBX-3096

Cover plates OBX-3096	Material	Cover angle	Article number
OBX-3096.ER	Stainless steel satin	square - square	459396.46
OBX-3096.St.Ni	Steel nickel plated	square - square	459396.42
OBX-3096.St.Zk	Steel zinc plated	square - square	459396.43

Illustration: Cover plates OBX-3097

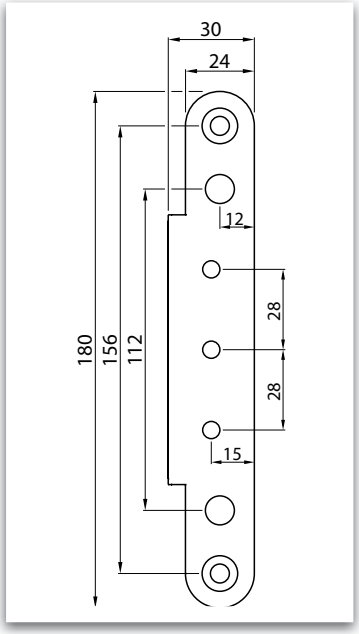

Dimension: Cover plates OBX-3097

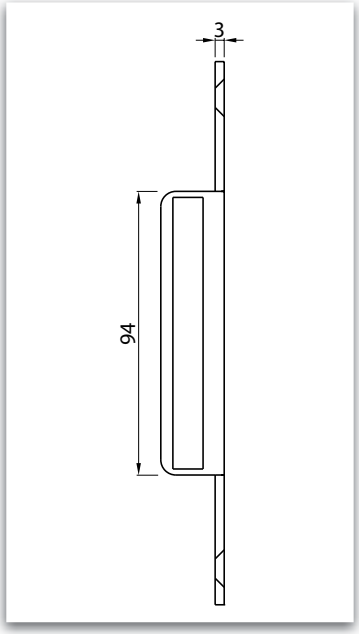

Dimension: Cover plates OBX-3097

Cover plates OBX-3097	Material	Cover angle	Article number
OBX-3097.ER	Stainless steel satin	square - round	459397.46
OBX-3097.St.Ni	Steel nickel plated	square - round	459397.42
OBX-3097.St.Zk	Steel zinc plated	square - round	459397.43

Swissdoor ApS • Stenhuggervej 2 • 5471 Søndersø • Danmark Telefon +45 86 28 00 00 • mail@swissdoor.dk • www.swissdoor.dk

Cover plates for adjustable frame boxes

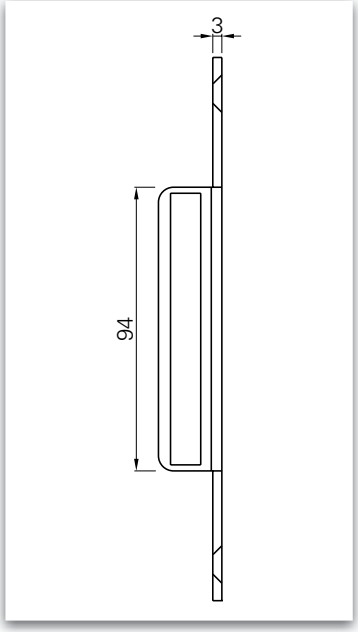

Dimension: Cover plates OBX-3098

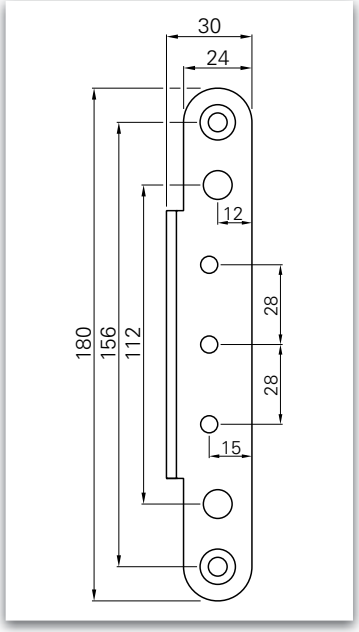

Dimension: Cover plates OBX-3098

Illustration: Cover plates OBX-3098

Cover plates OBX-3098	Material	Cover angle	Article number
OBX-3098.ER	Stainless steel satin	round - round	459398.46
OBX-3098.St.Ni	Steel nickel plated	round - round	459398.42
OBX-3098.St.Zk	Steel zinc plated	round - round	459398.43

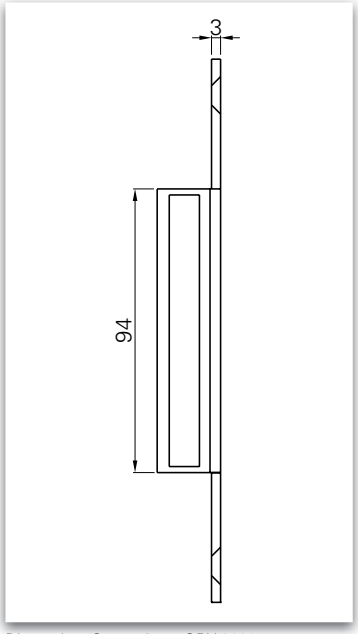

Dimension: Cover plates OBX-3099

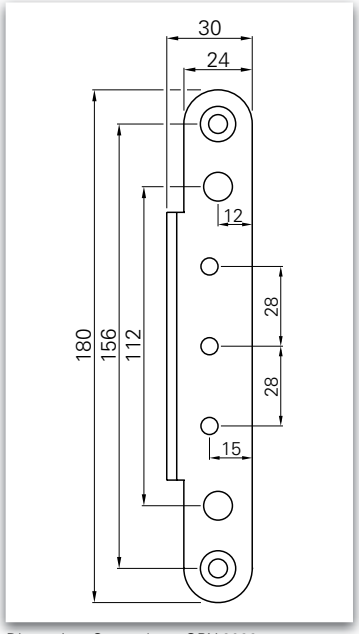

Dimension: Cover plates OBX-3099

Illustration: Cover plates OBX-3099

Cover plates OBX-3099	Material	Cover angle	Article number
OBX-3099.ER	Stainless steel satin	round - square	459399.46
OBX-3099.St.Ni	Steel nickel plated	round - square	459399.42
OBX-3099.St.Zk	Steel zinc plated	round - square	459399.43

Lifting lug for adjustable frame boxes

Illustration: lifting lug OBX-6012 steel zinc plated

Lifting lug

The use of lifting lugs is recommended for additional stabilization of the hinge - depending on use, construction and load of the door.
Lifting lugs relieve the fixing screws and stabilize the hinge parts in the door frame. The lifting lugs transfer the forces into the stabilized door frame so the forces can be better absorbed. The lifting lug is only stabilizing, not increasing the loading capacity.

Lifting lug in order to stabilize the hinge	Material	Master Gauge	Article number
OBX-6012.St.Zk	Steel zinc plated	for 7 point master gauge for holes	459905.43

Swissdoor ApS • Stenhuggervej 2 • 5471 Søndersø • Danmark Telefon +45 86 28 00 00 • mail@swissdoor.dk • www.swissdoor.dk

SWISSDOOR
DØRTEKNIK FOR PROFESSIONELLE

ECO

Laser-welded steel hinges

■ SYSTEM TECHNOLOGY FOR THE DOOR

Laser-welded steel hinges ▪ GENIUS LHA ▪ Hinge with spring / KO-Set 3 mm

GENIUS LHA-SET

Product characteristics		
Size		160 mm
Ø Barrel diameter		25 mm
Material thickness		3 mm
DIN left / DIN right		■
Frame types	Steel	■
Suitable for fire doors	F	■
Loading capacity Class 12 (maximum door load)	Hinge with spring max.	80 kg
	KO hinge EN 1935	100 kg
	Norm DIN 18 272 *	80 kg
Finishes	Steel zinc plated frame - and door parts	■
Hinge type:	Three-part standard hinge, laser-welded	
Bearing technology	Washered bearing	■
	Ball bearing	-
Fixing	Welded to the door frame screwed to the casement frame	

■ Yes - No *according to

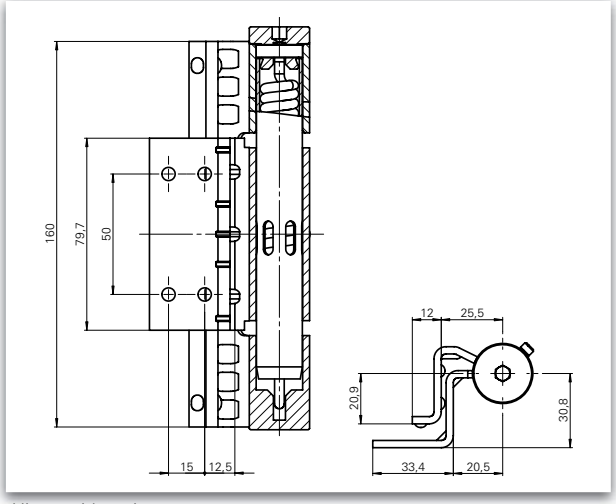

Hinge with spring

ECO-**Genius LHA**
three-part standard hinge to be welded on, adjustable in height (±3 mm)

Description:
ECO spring hinge / KO hinge set adjustable in height.
Spring hinge: based on **DIN 18272** KO-hinge: acc. **EN 1935**

Mounting:
Easy mounting of the hinge parts with the help of the hinge bolt

Special feature:
Easy mounting of the hinge parts with the help of the hinge bolt.

Usage:
For the use in doors with requirements in regards to smoke- and fire protection as well as in emergency and escape exits.

As construction hinge set (KO) also suitable for heavy doors.

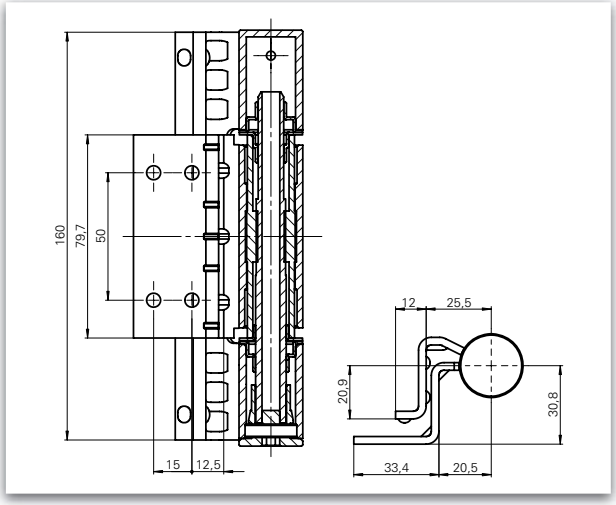

KO hinge

Swissdoor ApS • Stenhuggervej 2 • 5471 Søndersø • Danmark Telefon +45 86 28 00 00 • mail@swissdoor.dk • www.swissdoor.dk

Laser-welded steel hinges ▪ GENIUS LHA ▪ Hinge with spring / KO-Set 3 mm

DIN 18 272

F

GENIUS LHA SET	Material		Dimensions	Article number
GENIUS LHA Set	Steel zinc plated	Set	Ø 25 x 160	Customize

DIN 18 272

F

GENIUS LHA Hinge with spring	Material		Dimensions	Article number
GENIUS LHA Hinge with spring	Steel zinc plated	Hinge with spring	Ø 25 x 160	Customize

DIN 18 272

EN 1935

F

GENIUS LHA (KO hinge)	Material		Dimensions	Article number
GENIUS LHA KO hinge	Zinc-plated	KO hinge	Ø 25 x 160	Customize

Laser-welded steel hinges ▪ Standard Hinge with spring / KO-Set 3 mm

STANDARD-SET 3 mm

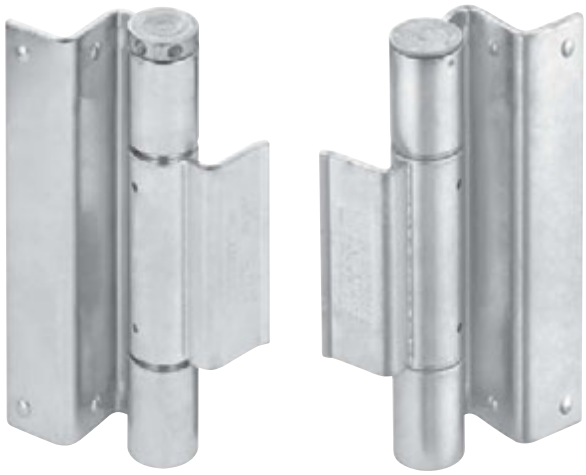

Product characteristics		
Size		160 mm
Ø Barrel diameter		25 mm
Material thickness		3 mm
DIN left / DIN right		■
Frame types	Steel	■
Suitable for fire doors	F	■
Loading capacity Class 12 (maximum-door load)	Hinge with spring max.	80 kg
	KO hinge EN 1935	100 kg
	Norm DIN 18 272	80 kg
Finishes	Zinc-plated frame - and door parts	■
Hinge type:	Three-part standard hinge, laser-welded	
Bearing technology	Washered bearing	■
	Ball bearing	-
Fixing	Welded to the door frame screwed to the casement frame	

■ Yes - No

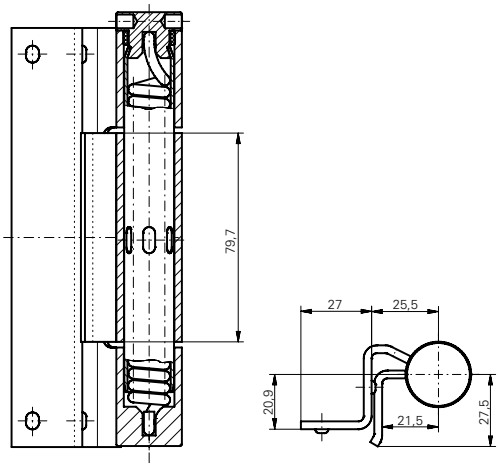

Hinge with spring

ECO-**standard hinge to be welded**
three-part standard hinge to be welded on (3 mm)

Description:
ECO spring hinge / KO hinge set.
Spring hinge: based on **DIN 18272** KO-hinge: acc. **EN 1935**

Mounting:
Easy mounting of the hinge parts with the help of the hinge bolt.

Usage: For the use in doors with requirements in regards to smoke- and fire protection as well as in emergency and escape exits.

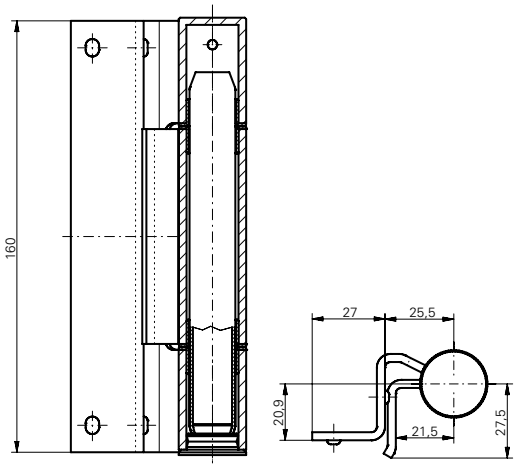

KO hinge

Swissdoor ApS • Stenhuggervej 2 • 5471 Søndersø • Danmark Telefon +45 86 28 00 00 • mail@swissdoor.dk • www.swissdoor.dk

Laser-welded steel hinges ▪ Standard Hinge with spring / KO-Set 3 mm

DIN 18 272

F

Standard Hinge with spring / KO - Set 3 mm	Material		Dimensions	Article number
Standard-Set	Steel zinc plated	Set	Ø 25 x 160	Customize

DIN 18 272

F

Standard Hinge with spring 3 mm	Material		Dimensions	Article number
Hinge with spring	Steel zinc plated	Hinge with spring	Ø 25 x 160	Customize

DIN 18 272

EN 1935

F

Standard KO hinge 3 mm	Material		Dimensions	Article number
KO hinge	Steel zinc plated	KO hinge	Ø 25 x 160	Customize

Laser-welded steel hinges ▪ Standard Hinge with spring / KO-Set 4 mm

STANDARD-SET 4 mm

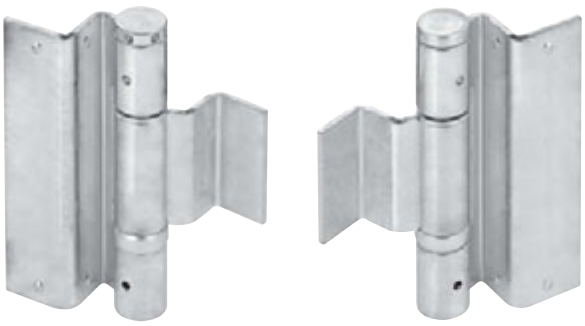

Product characteristics		
Size		160 mm
Ø Barrel diameter		27 mm
Material thickness		3 mm
DIN left / DIN right		■
Frame types	Steel	■
Suitable for fire doors	F	■
Loading capacity Class 13 (maximum door load)	Hinge with spring max.	80 kg
	KO hinge EN 1935	120 kg
	Norm DIN 18 272 *	80 kg
Finishes	Zinc-plated frame - and door parts	■
Hinge type:	Three-part standard hinge, laser-welded	
Bearing technology	Washered bearing	■
	Ball bearing	-
Fixing	Welded to the door frame Welded to the casement frame	

■ Yes - No *according to

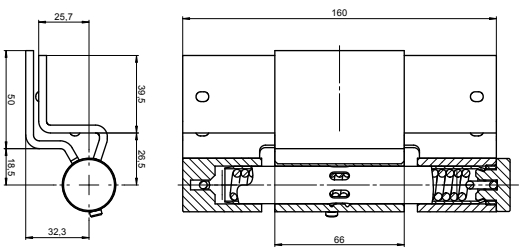

Hinge with spring

ECO-**standard hinge to be welded**
three-part standard hinge to be welded on (4 mm)

Description:
ECO spring hinge / KO hinge set.
Spring hinge: based on **DIN 18272** KO-hinge: acc. **EN 1935**

Mounting:
Easy mounting of the hinge parts with the help of the hinge bolt.

Usage:
For the use in doors with requirements in regards to smoke- and fire protection as well as in emergency and escape exits.

As construction hinge set (KO) also suitable for heavy doors.

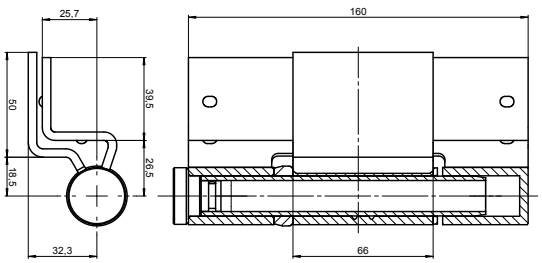

KO hinge

Swissdoor ApS • Stenhuggervej 2 • 5471 Søndersø • Danmark Telefon +45 86 28 00 00 • mail@swissdoor.dk • www.swissdoor.dk

Laser-welded steel hinges ▪ Standard Hinge with spring / KO-Set 4 mm

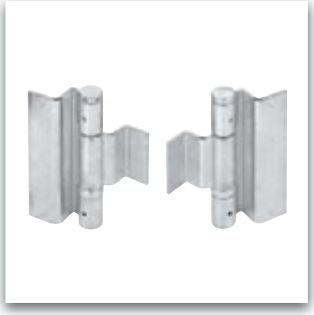

DIN 18 272

F

Standard Hinge with spring / KO - Set 4 mm	Material		Dimensions	Article number
Standard-Set	Steel zinc plated	Set	Ø 27 x 160	Customize

DIN 18 272

F

Standard Hinge with spring 4 mm	Material		Dimensions	Article number
Hinge with spring	Steel zinc plated	Hinge with spring	Ø 27 x 160	Customize

EN 1935

F

Standard KO hinge 4 mm	Material		Dimensions	Article number
KO hinge	Steel zinc plated	KO hinge	Ø 27 x 160	Customize

Laser-welded steel hinges ▪ Hinge with spring / KO-Set 3 mm ▪ Adjustable in height and side

STANDARD-SET 3 mm ADJUSTMENT IN HEIGHT

Product characteristics		
Size		160 mm
Ø Barrel diameter		25 mm
Material thickness		3 mm
DIN left / DIN right		■
Frame types	Steel	■
Suitable for fire doors	F	■
Finishes	Zinc-plated frame - and door parts	■
Hinge type:	Three - part hinge to be screwed on laser welded	
Bearing technology	Washered bearing	■
	Ball bearing	-
Fixing	Screwed to the door frame Screwed to the casement frame	

■ Yes - No

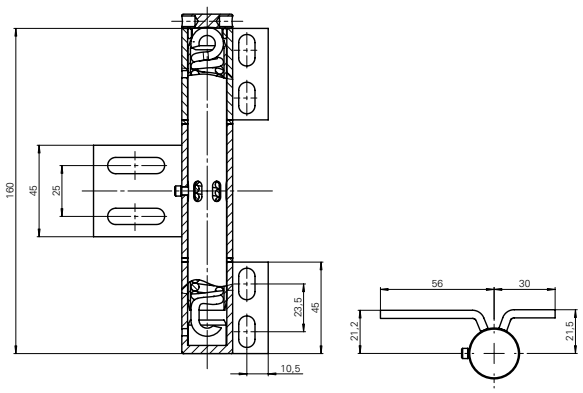

Hinge with spring

ECO-**Standard hinge**
three-part hinge to be screwed on, adjustable in height and side (3 mm)

Description:
ECO spring hinge / KO hinge set adjustable in height and side.

Special feature:
Nylon covers (black)

Usage:
For the use in doors with requirements in regards to smoke- and fire protection as well as in emergency and escape exits.

As construction hinge set (KO) also suitable for heavy doors.

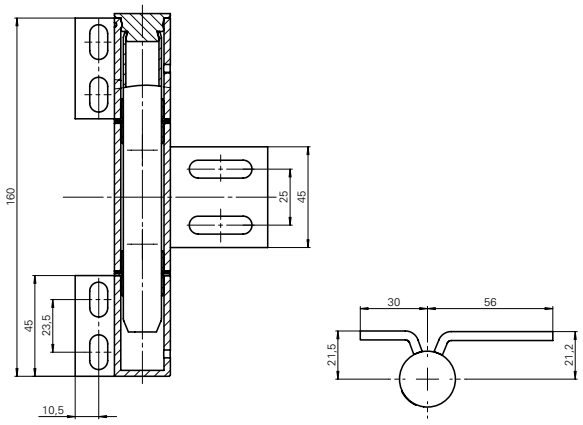

KO hinge

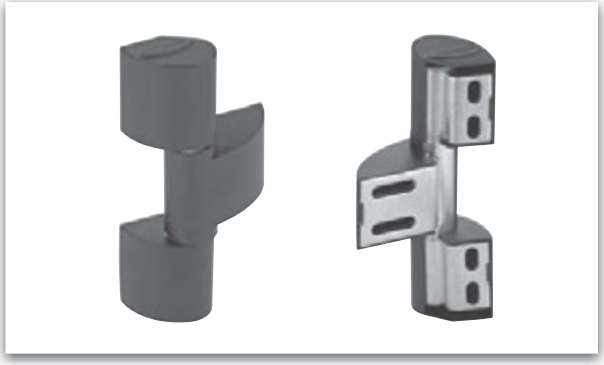

Swissdoor ApS • Stenhuggervej 2 • 5471 Søndersø • Danmark Telefon +45 86 28 00 00 • mail@swissdoor.dk • www.swissdoor.dk

Laser-welded steel hinges ▪ Hinge with spring / KO-Set 3 mm ▪ Adjustable in height and side

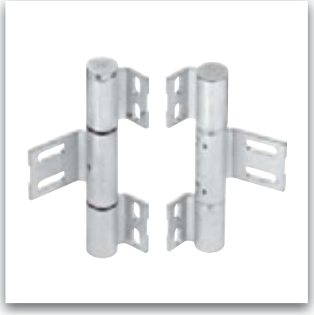

F

Hinge with spring / KO - Set 3 mm adjustable in height and side	Material		Dimensions	Article number
Standard-Set	Steel zinc plated	Set	Ø 25 x 160	Customize

F

Hinge with spring 3 mm adjustable in height and side	Material		Dimensions	Article number
Hinge with spring	Steel zinc plated	Hinge with spring	Ø 25 x 160	Customize

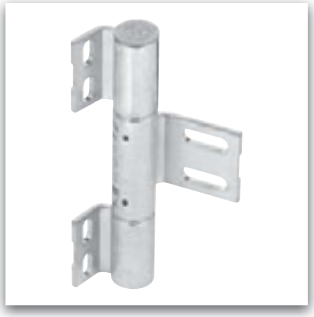

F

KO hinge 3 mm adjustable in height and side	Material		Dimensions	Article number
KO hinge	Steel zinc plated	KO hinge	Ø 25 x 160	Customize

Locking pin

Spring pin

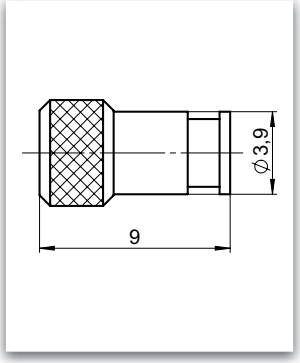

3 mm

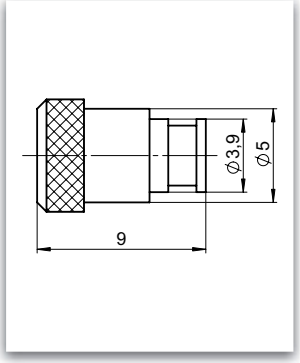

4 mm

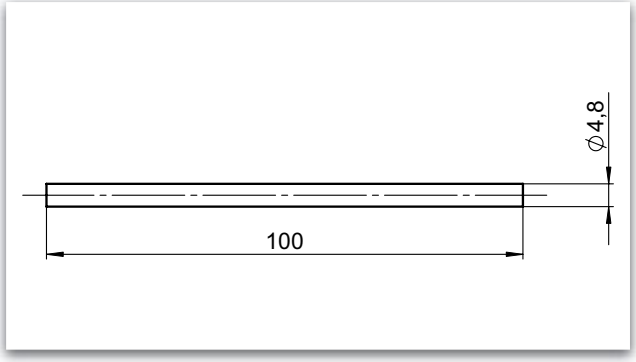

Locking pin	Article number	Material
Locking pin 5 x 9 mm for 3 mm material thickness	90031443	Steel zinc plated
Locking pin 6 x 9 mm for 4 mm material thickness	90031343	Steel zinc plated

Spring pin	Article number	Material
Spring pin 4,8 x 100 mm	93031643	Steel zinc plated

Tensioning and fixing of spring hinges

Fire-protection doors are equipped with one spring hinge and one KO hinge. In order to dismantle the door leaf, the hinge bolts have to be expelled to the door centre. When spring hinge is on tension, the **locking pin** has to be removed first.

If you want to put tension on the spring hinge, you have to enter the **spring pin** in one of the drill holes of the spring hinge head (when door is closed). Turning the split pin away from the door leaf puts tension on the spring. Putting the **locking pin** into one of the drill holes of the middle hinge roll, holds the position. The pre-tension has to be adjusted in that way that the door leaf is closing independently from an opening angle of approx. 30°.

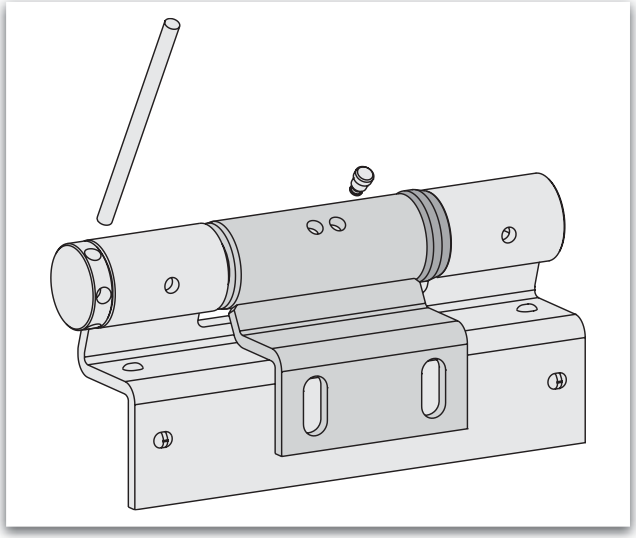

Swissdoor ApS • Stenhuggervej 2 • 5471 Søndersø • Danmark Telefon +45 86 28 00 00 • mail@swissdoor.dk • www.swissdoor.dk

Airport Hamburg
Germany

ECO **Hinge Technology**
Defying the laws of leverage

Good hinges ensure that doors open the way we expect them to. They define the fulcrum - and thereby the mobility of the door - and give the door leaf a solid support.

Door hinges must be precisely coordinated to the dimensions of a door - to its measurements, weight, type of mounting and location. They are not just hard-wearing components of a door. ECO Schulte can look back on decades of experience in the manufacture of hinges. ECO hinges are premium products that comply with the standard **EN 1935**. They bear the CE mark and are tested in the highest standard class (14).

SWISSDOOR
DØRTEKNIK FOR PROFESSIONELLE

ECO

Hardware for glass door handles

Holistic solutions

■ SYSTEM TECHNOLOGY FOR THE DOOR

Swissdoor ApS • Stenhuggervej 2 • 5471 Søndersø • Danmark Telefon +45 86 28 00 00 • mail@swissdoor.dk • www.swissdoor.dk

GLASS DOOR HANDLES

Locks, hinges and levers made of aluminium, zinc diecasting or stainless steel for the use in glass doors. Based on **DIN 18251** and **EN 1906**. They fulfill the requirements of holistic solutions with their form, construction and surface.

Glass working for two-part hinges and glass door locks

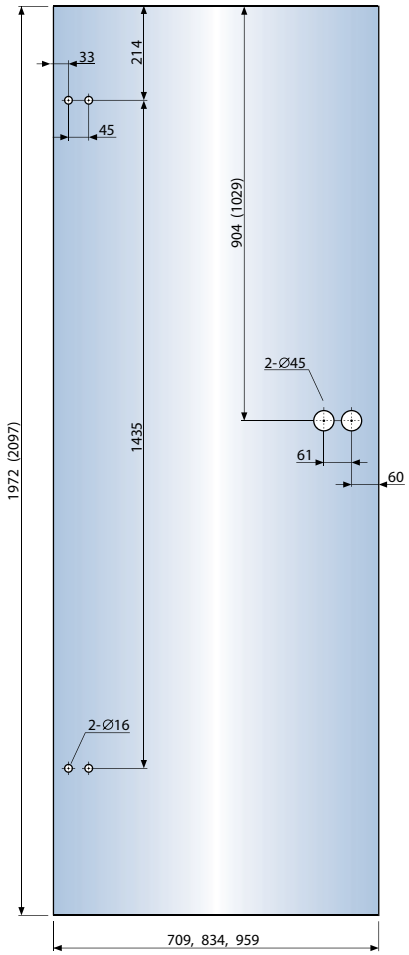

Note:
The illustration shows the glass working of a standard door leaf.

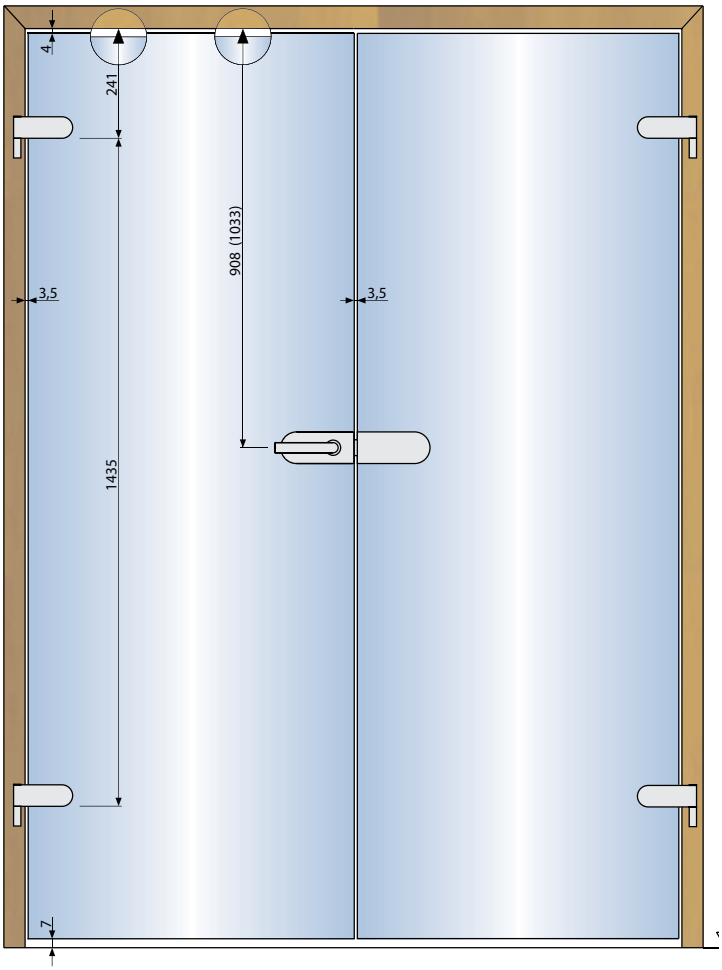

Note:
The illustration shows a glass door leaf using standard frames acc. to **DIN 18101**.

Swissdoor ApS • Stenhuggervej 2 • 5471 Søndersø • Danmark Telefon +45 86 28 00 00 • mail@swissdoor.dk • www.swissdoor.dk

Glass working for three-part hinges and glass door locks

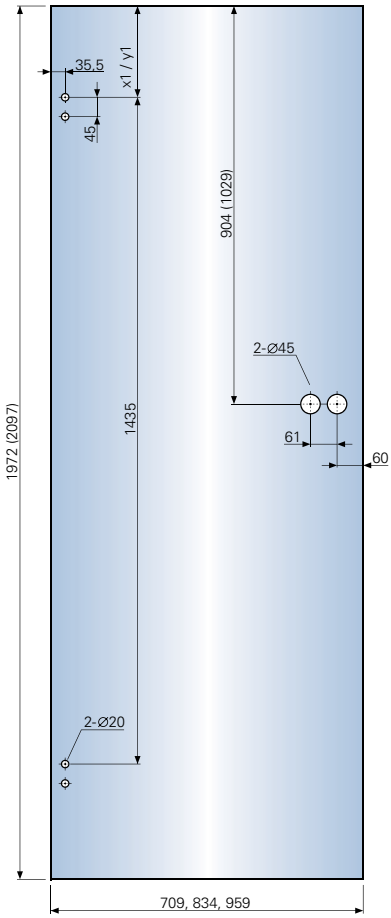

Note:
The illustration shows the glass working of a standard door leaf.

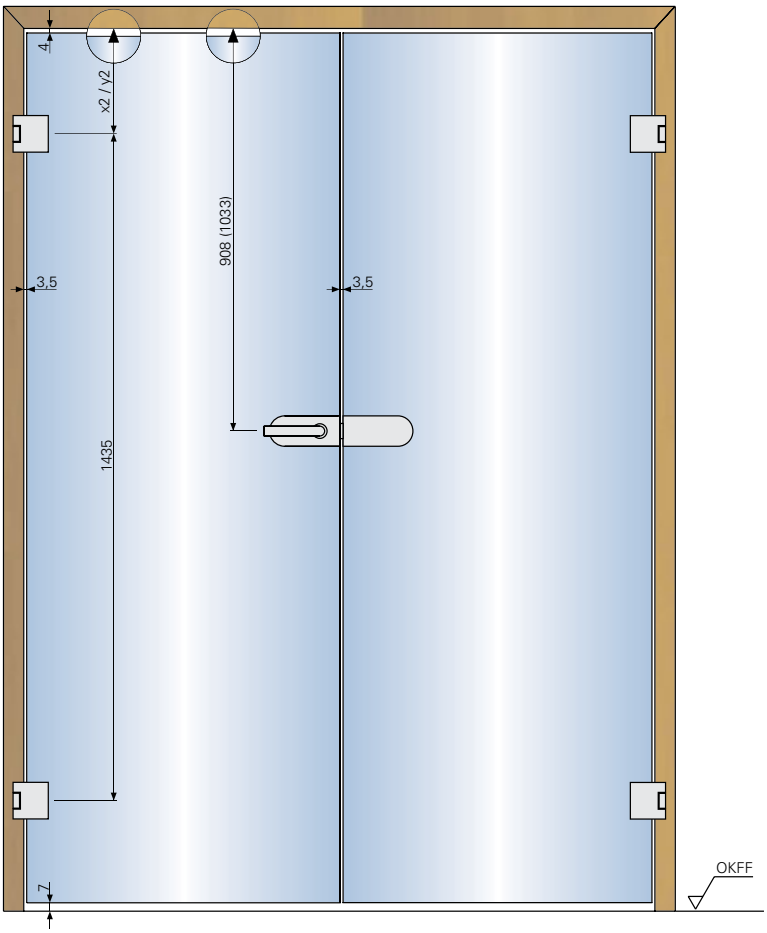

Note:
The illustration shows a glass door leaf using standard frames acc. to **DIN 18101**.

Note:
x1 = 232 mm / x 2= 258,5 mm
For screw-on – frame part for upright standing pillar frame
For mortise – frame part and adjustable hinge box for timber frame
For mortise – frame part and adjustable hinge box for steel frame
y1 = 214,5 / y2 = 241
For OBX – frame part and adjustable hinge box for upright standing pillar frame
For OBX – frame part and adjustable hinge box for timber frame
For OBX – frame part and adjustable hinge box for steel frame
For OBX – frame part and adjustable hinge box for aluminium frame

References

For years, ECO products have been used everywhere in the world where modern design, quality, reliability and security are important. The relation between design and architecture are especially applied to the glass sector. Only ECO system components in connection with a glass door create an architectural element that is used by our customers worldwide.

Millenium Tower Vienna

TABLE OF CONTENTS

Glass door handles ▪ Sets

Studio Basic Set
Page 598

Studio Design Set
Page 600

Studio Office Set
Page 602

Glass door handles ▪ Lock

UV lock
Page 604

BB lock
Page 604

PZ lock
Page 604

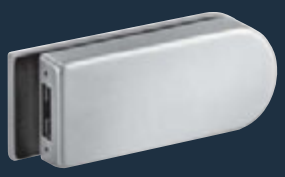

Counter lock
Page 605

Glass door handles ▪ Hinges

Studio-Basic hinges
aluminium / stainless steel
Page 606

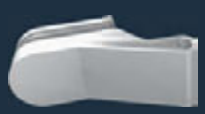

Studio-Design hinges
aluminium / stainless steel
Page 606

Studio-Office hinges
aluminium / stainless steel
Page 606

Swissdoor ApS • Stenhuggervej 2 • 5471 Søndersø • Danmark Telefon +45 86 28 00 00 • mail@swissdoor.dk • www.swissdoor.dk

Glass door handles ▪ Lever sets

D-110
U-Form
Page 612

D-310
CL- Form
Page 612

D-410
U-Form Design
Page 613

D-730
XERA
Page 613

Glass door handles ▪ Glass door patch handles

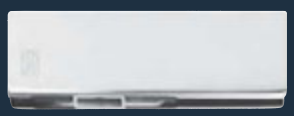

GF-0100 - GF-0500
Page 614

Glass door handles ▪ Accessories

Floor springs
Page 616

Glass clamping device
Page 618

Frame parts, two-part
Page 620

Frame parts, three-part
Page 621

Studio Basic Set

Product characteristics		
Glass (toughened safety glass)		8 (10) mm
Notch depth		24 (26) mm
Same version DIN left and DIN right		
Single-turn / 18 mm bolt projection		
Tested on the basis of **DIN 18251**, class 3		DIN 18 251
Available lever sets	ECO	
	Other	
Follower	8 mm	
Lever neck	16 mm	
	18 mm	
For door weights up to max.	45 kg	
	55 kg	-
For door widths up to max.	1.000 mm	
Finishes	Aluminium stainless steel look satin	
	Aluminium F1 silver anodized	
Locking mode	UV	
	BB	
	PZ	

■ Yes - No ◘ On request

PRODUCT GROUP

Studio-Basic

Studio-Design

Studio-Office

Swissdoor ApS • Stenhuggervej 2 • 5471 Søndersø • Danmark Telefon +45 86 28 00 00 • mail@swissdoor.dk • www.swissdoor.dk

Glass door handles ▪ Studio Basic Set

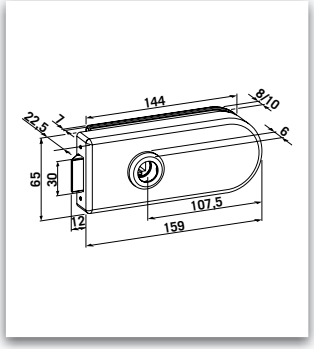

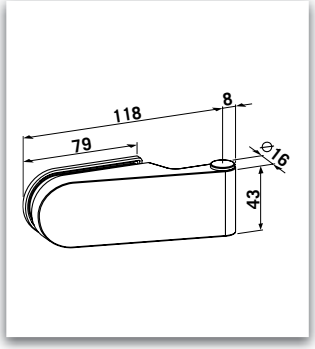

Door hardware set UV lock lever position in front	Article number	Description	Material
Studio Basic.Set. UV.ER	900.46	1 UV lock + 2 straight hinges (2-part)	Stainless steel look, satin
Studio Basic.Set. UV.Al	900.30	1 UV lock + 2 straight hinges (2-part)	Aluminim F1

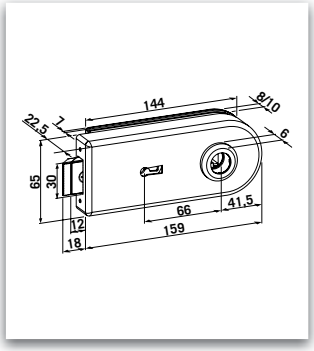

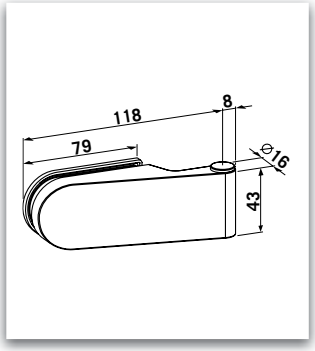

Door hardware set BB lock lever position in back	Article number	Description	Material
Studio Basic.Set. BB.ER	901.46	1 BB lock + 2 straight hinges (2-part)	Stainless steel look, satin
Studio Basic.Set. BB.Al	901.30	1 BB lock + 2 straight hinges (2-part)	Aluminim F1

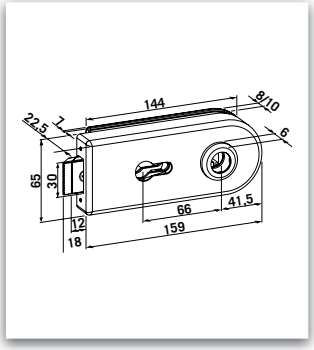

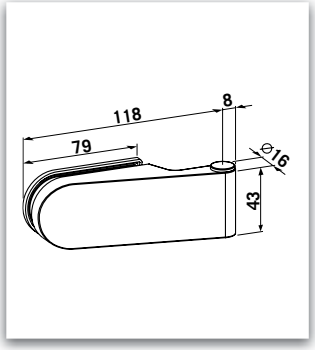

Door hardware set PZ lock lever position in back	Article number	Description	Material
Studio Basic.Set. PZ.ER	902.46	1 PZ lock + 2 straight hinges (2-part)	Stainless steel look, satin
Studio Basic.Set. PZ.Al	902.30	1 PZ lock + 2 straight hinges (2-part)	Aluminim F1

Studio Design Set

Product characteristics		
Glass (toughened safety glass)		8 (10) mm
Notch depth		24 (26) mm
Same version DIN left and DIN right		■
Single-turn / 18 mm bolt projection		■
Tested on the basis of **DIN 18251**, class 3		DIN 18 251
Lever sets	ECO	■
	Other	■
Follower	8 mm	■
Lever neck	16 mm	■
	18 mm	■
For door weights up to max.	45 kg	■
	55 kg	-
For door widths up to max.	1.000 mm	■
Finishes	Aluminium stainless steel look satin	■
	Aluminium F1 silver anodized	■
Locking mode	UV	■
	BB	■
	PZ	■

■ Yes - No ◘ On request

PRODUCT GROUP

Studio-Basic

Studio-Design

Studio-Office

Swissdoor ApS • Stenhuggervej 2 • 5471 Søndersø • Danmark Telefon +45 86 28 00 00 • mail@swissdoor.dk • www.swissdoor.dk

Glass door handles ▪ Studio Design Set

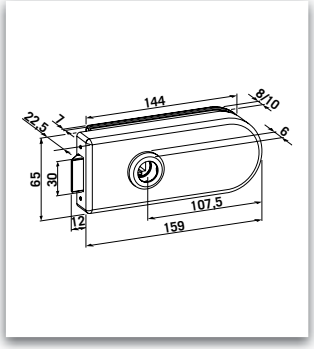

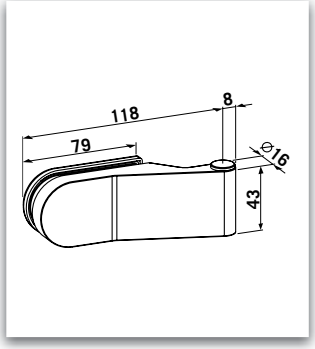

Door hardware set UV lock lever position in front	Article number	Description	Material
Studio Design.Set. UV.ER	910.46	1 UV lock + 2 cranked hinges (2-part)	Stainless steel look, satin
Studio Design.Set. UV.Al	910.30	1 UV lock + 2 cranked hinges (2-part)	Aluminim F1

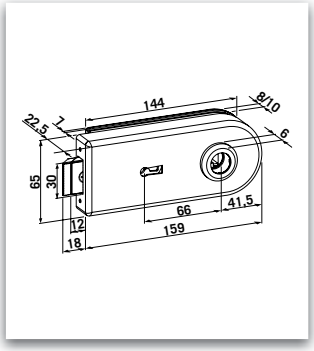

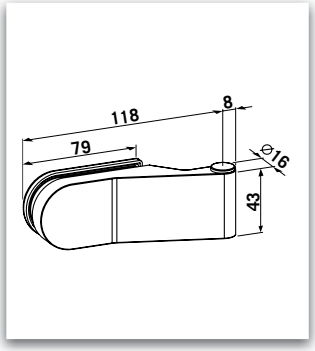

Door hardware set BB lock lever position in back	Article number	Description	Material
Studio Design.Set. BB.ER	911.46	1 BB lock + 2 cranked hinges (2-part)	Stainless steel look, satin
Studio Design.Set. BB.Al	911.30	1 BB lock + 2 cranked hinges (2-part)	Aluminim F1

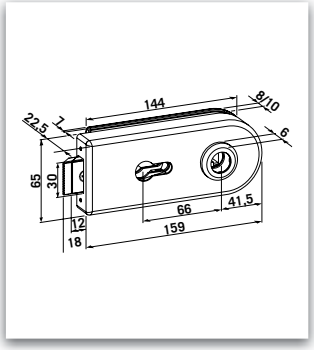

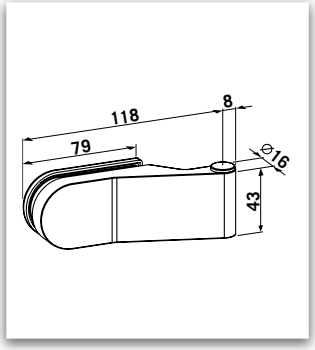

Door hardware set PZ lock lever position in back	Article number	Description	Material
Studio Design.Set. PZ.ER	912.46	1 PZ lock + 2 cranked hinges (2-part)	Stainless steel look, satin
Studio Design.Set. PZ.Al	912.30	1 PZ lock + 2 cranked hinges (2-part)	Aluminim F1

Studio Office Set

Product characteristics		
Glass (toughened safety glass)		8 (10) mm
Notch depth		24 (26) mm
Same version DIN left and DIN right		■
Single-turn / 18 mm bolt projection		■
Tested on the basis of **DIN 18251**, class 3		DIN 18 251
Lever sets	ECO	■
	Other	■
Follower	8 mm	■
Lever neck	16 mm	■
	18 mm	■
For door weights up to max.	45 kg	■
	55 kg	-
For door widths up to max.	1.000 mm	■
Finishes	Aluminium stainless steel look satin	■
	Aluminium F1 silver anodized	■
Locking mode	UV	■
	BB	■
	PZ	■

■ Yes - No ◘ On request

PRODUCT GROUP

Studio-Basic

Studio-Design

Studio-Office

Swissdoor ApS • Stenhuggervej 2 • 5471 Søndersø • Danmark Telefon +45 86 28 00 00 • mail@swissdoor.dk • www.swissdoor.dk

Glass door handles ▪ Studio Office Set

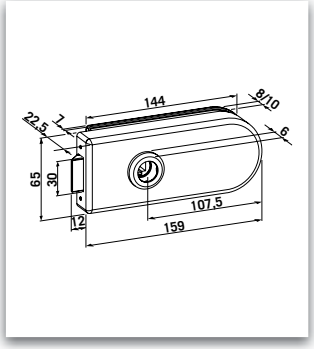

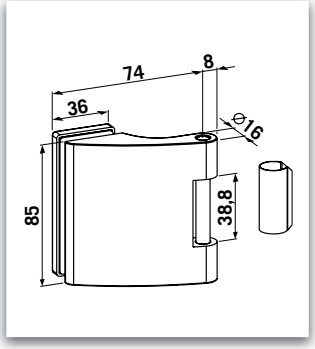

Door hardware set UV lock lever position in front	Article number	Description	Material
Studio Office.Set. UV.ER	904.46	1 UV lock + 2 hinges (3-part)	Stainless steel look, satin
Studio Office.Set. UV.Al	904.30	1 UV lock + 2 hinges (3-part)	Aluminim F1

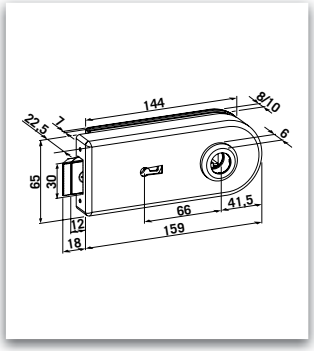

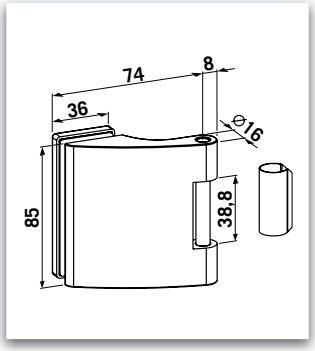

Door hardware set BB lock lever position in back	Article number	Description	Material
Studio Office.Set. BB.ER	905.46	1 BB lock + 2 hinges (3-part)	Stainless steel look, satin
Studio Office.Set. BB.Al	905.30	1 BB lock + 2 hinges (3-part)	Aluminium F1

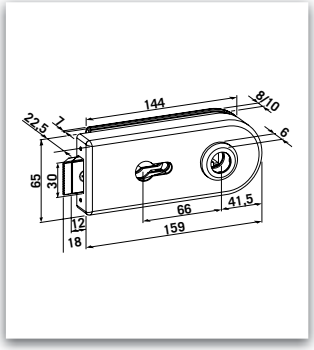

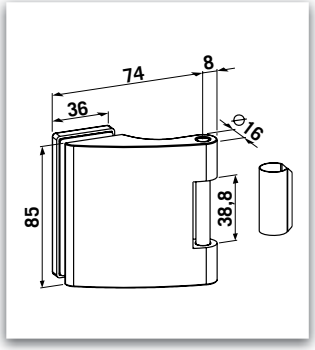

Door hardware set PZ lock lever position in back	Article number	Description	Material
Studio Office.Set. PZ.ER	906.46	1 PZ lock + 2 hinges (3-part)	Stainless steel look, satin
Studio Office.Set. PZ.Al	906.30	1 PZ lock + 2 hinges (3-part)	Aluminim F1

Locks made of stainless steel or aluminium with fixing material · without lever

- Suitable for 8 - 10 mm glass (toughened safety glass)
- Same version DIN left and DIN right
- Single-turn / 18 mm bolt projection
- Tested on the basis of **DIN 18251,** class 3
- Can be combined with all ECO as well as standard levers without escutcheon, with 8 mm follower and Ø 16 mm and Ø 18 mm lever neck

Finishes

- Stainless steel
- Aluminium F1 silver anodized

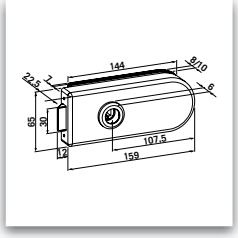

UV lock lever position in front	Article number	Description	Material
Studio lock.UV.ER	920.46	Glass door lock UV · without lever	Stainless steel
Studio lock.UV.Al	920.30	Glass door lock UV · without lever	Aluminium F1 silver anodized

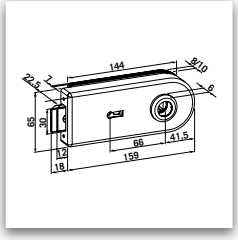

BB lock lever position back	Article number	Description	Material
Studio lock.BB.ER	921.46	Glass door lock BB · without lever	Stainless steel
Studio lock.BB.Al	921.30	Glass door lock BB · without lever	Aluminium F1 silver anodized

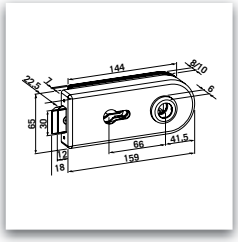

PZ lock lever position back	Article number	Description	Material
Studio lock.PZ.ER	922.46	Glass door lock PZ · without lever	Stainless steel
Studio lock.PZ.Al	922.30	Glass door lock PZ · without lever	Aluminium F1 silver anodized

Swissdoor ApS • Stenhuggervej 2 • 5471 Søndersø • Danmark Telefon +45 86 28 00 00 • mail@swissdoor.dk • www.swissdoor.dk

Counter locks for passive leaf made of stainless steel or aluminium for glass doors with fixing material

- Suitable for 8 - 10 mm glass (toughened safety glass)
- Same version DIN left and DIN right

Finishes

- Stainless steel
- Aluminium F1 silver anodized

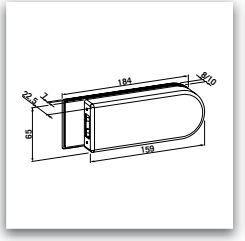

Counter lock	Article number	Description	Material
Counter lock.ER	970.46	Counter lock	Stainless steel

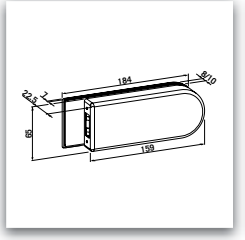

Counter lock	Article number	Description	Material
Counter lock.Al	970.30	Counter lock	Aluminium F1

Door hinges made of aluminium, or zinc diecasting for glass doors with fixing material

- Same version DIN left and DIN right
- Suitable for 8 mm - 10 mm (toughened safety glass)
- Notch depth for two-part hinge = 24 mm at 8 mm, 26 mm at 10 mm glass
- Notch depth for three-part hinge = 24 mm at 8 mm, 26 mm at 10 mm glass
- Stainless steel screws M6
- Can be combined with standard frame parts
- Installation in frames acc. **DIN 18101 / 18111**
- For door weights up to max. 45 kg with Studio Basic
  For door weights up to max. 55 kg with Studio Office
- For door widths up to max. 1.000 mm

Finishes:

- Stainless steel look, satin
- Aluminium F1 silver anodized

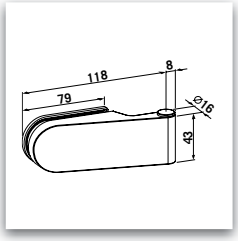

Studio-Basic	Article number	Description	Material
Studio Basic.hinge.ER	990.46	2 Studio-hinges, straight (2-part)	Stainless steel look, satin
Studio Basic.hinge.Al	990.30	2 Studio-hinges, straight (2-part)	Aluminium F1 silver anodized

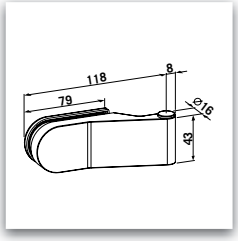

Studio-Design	Article number	Description	Material
Studio Design.hinge.ER	020.46	2 Studio-hinges, cranked (2-part)	Stainless steel look, satin
Studio Design.hinge.Al	020.30	2 Studio-hinges, cranked (2-part)	Aluminium F1 silver anodized

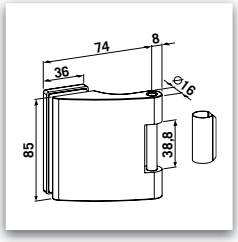

Studio-Office	Article number	Description	Material
Studio Office.hinge.ER	980.46	1 hinge (3-part)	Stainless steel look, satin
Studio Office.hinge.Al	980.30	1 hinge (3-part)	Aluminium F1 silver anodized

Swissdoor ApS • Stenhuggervej 2 • 5471 Søndersø • Danmark Telefon +45 86 28 00 00 • mail@swissdoor.dk • www.swissdoor.dk

SWiSSDOOR
DØRTEKNIK FOR PROFESSIONELLE

ECO **Glass door systems**
Holistic solutions.

The single components in different executions and finishes offer you system technology for the glass door also in high-end quality: locks, hinges and levers made of aluminium, zinc-diecasting or stainless steel for the use on glass doors based on **DIN 18251** and **EN 1906**. With their form, construction and surface they comply with the holistic solutions of ECO's door hardware.

The complete programme of glass door handles has been well thought through. It is completed by hinges, handle sets & lock combinations as well as door closers and floor springs.

Swissdoor ApS • Stenhuggervej 2 • 5471 Søndersø • Danmark Telefon +45 86 28 00 00 • mail@swissdoor.dk • www.swissdoor.dk

Assembly situation

with OBX frame part and adjustable hinge box

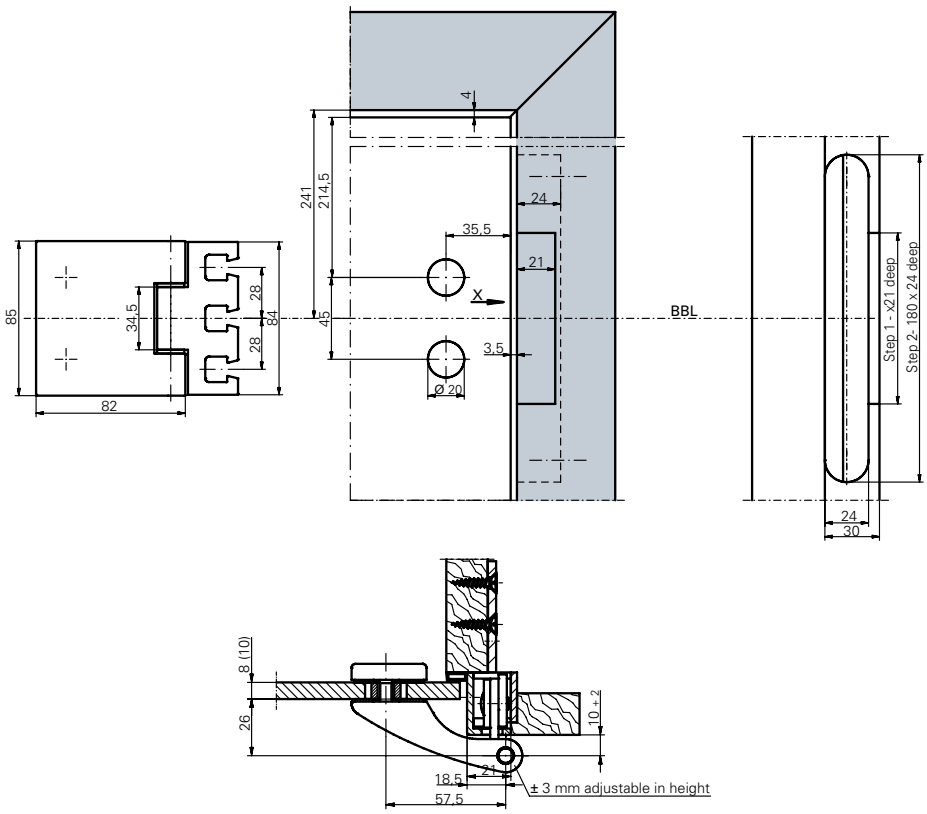

For timber frames

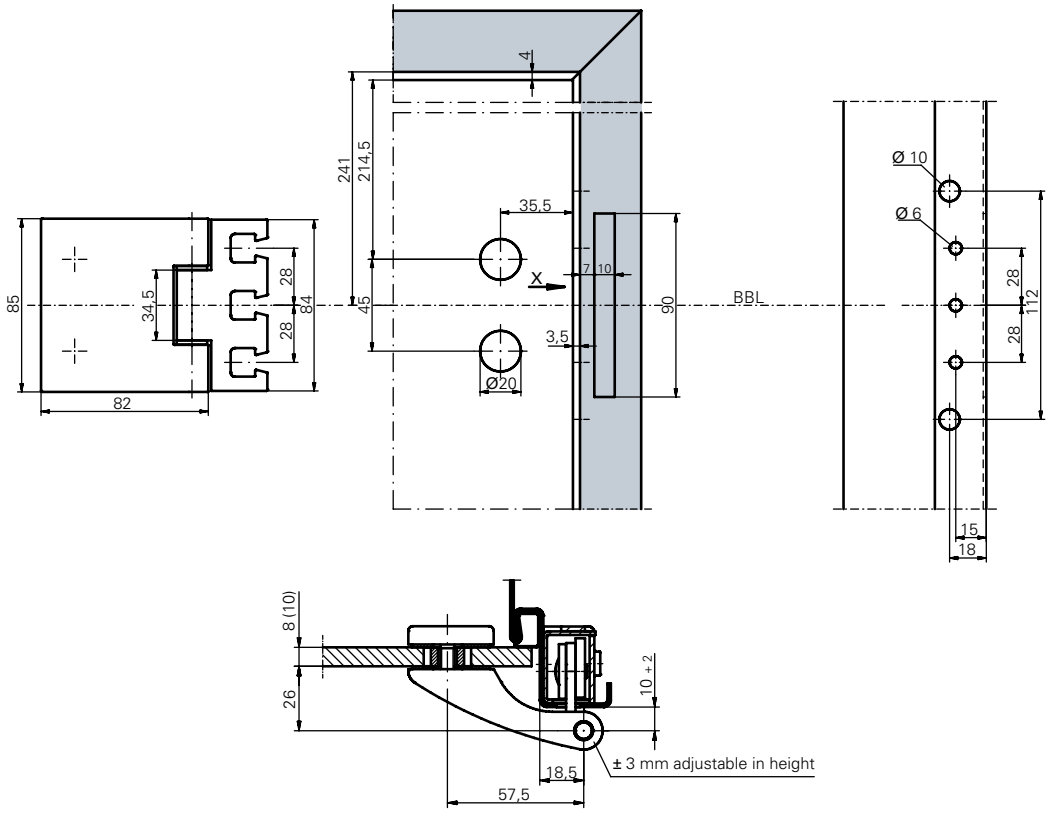

For steel frames

Assembly situation

with OBX frame part and adjustable hinge box

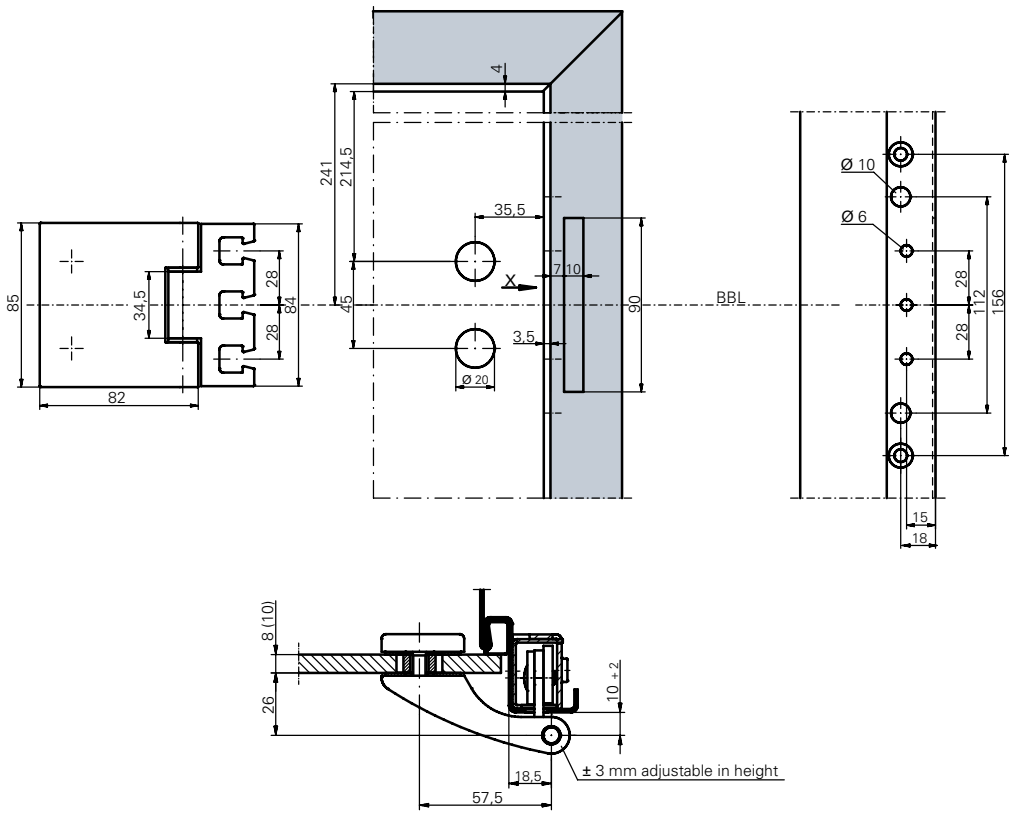

For aluminium frames

Assembly situation

Frame part to be screwed on

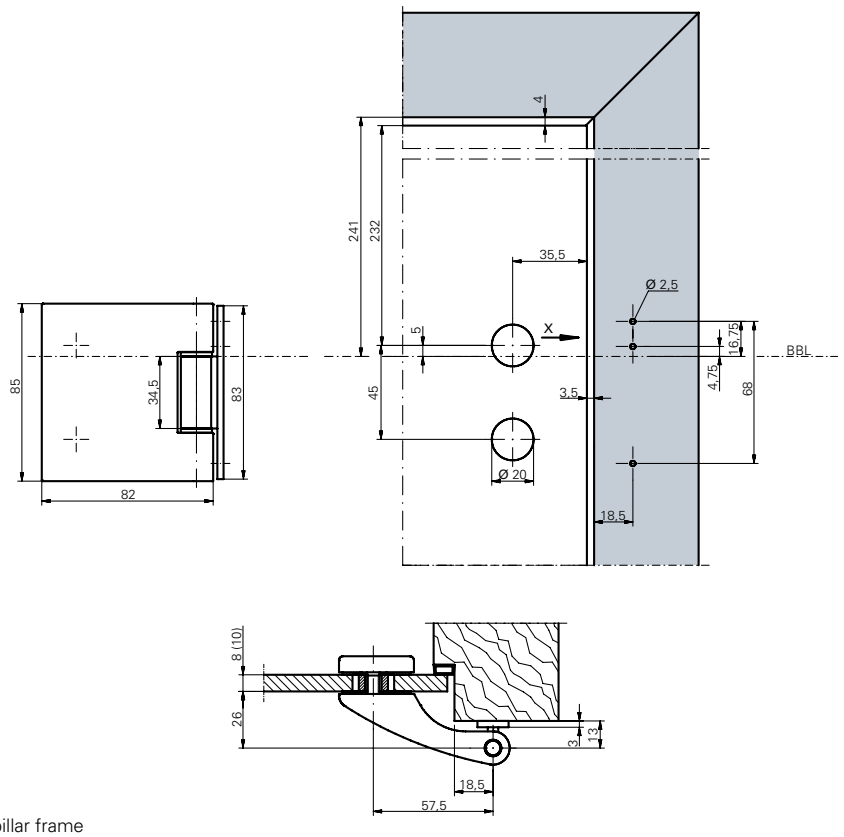

For upright standing pillar frame

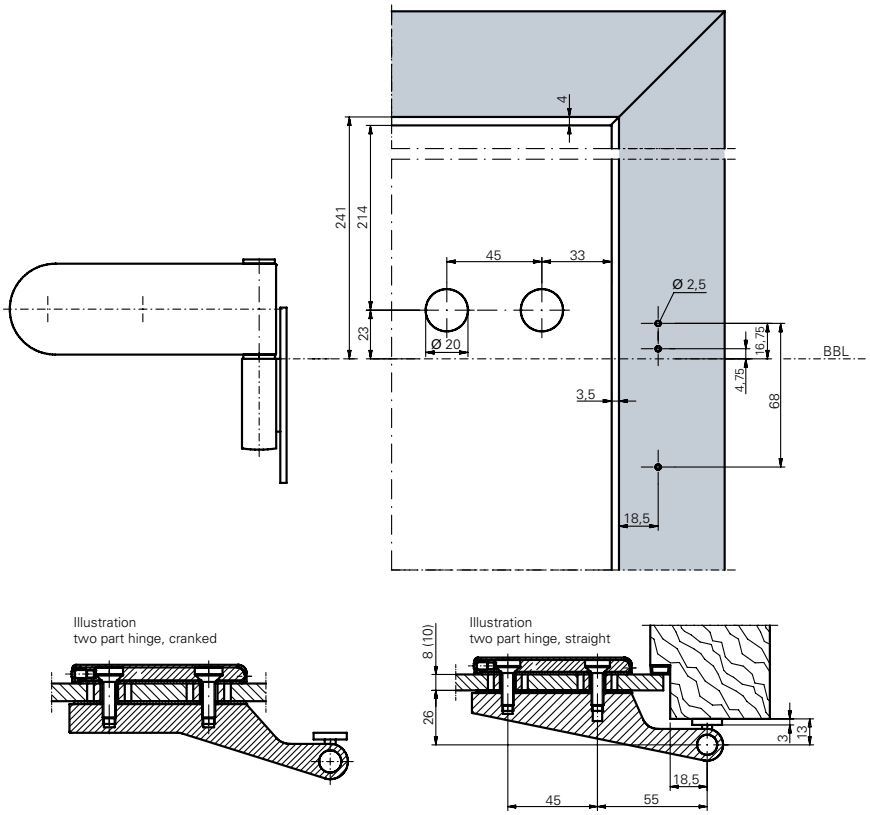

For upright standing pillar frame (2-part hinge)

Swissdoor ApS • Stenhuggervej 2 • 5471 Søndersø • Danmark Telefon +45 86 28 00 00 • mail@swissdoor.dk • www.swissdoor.dk

Assembly situation

Frame part to be mounted in

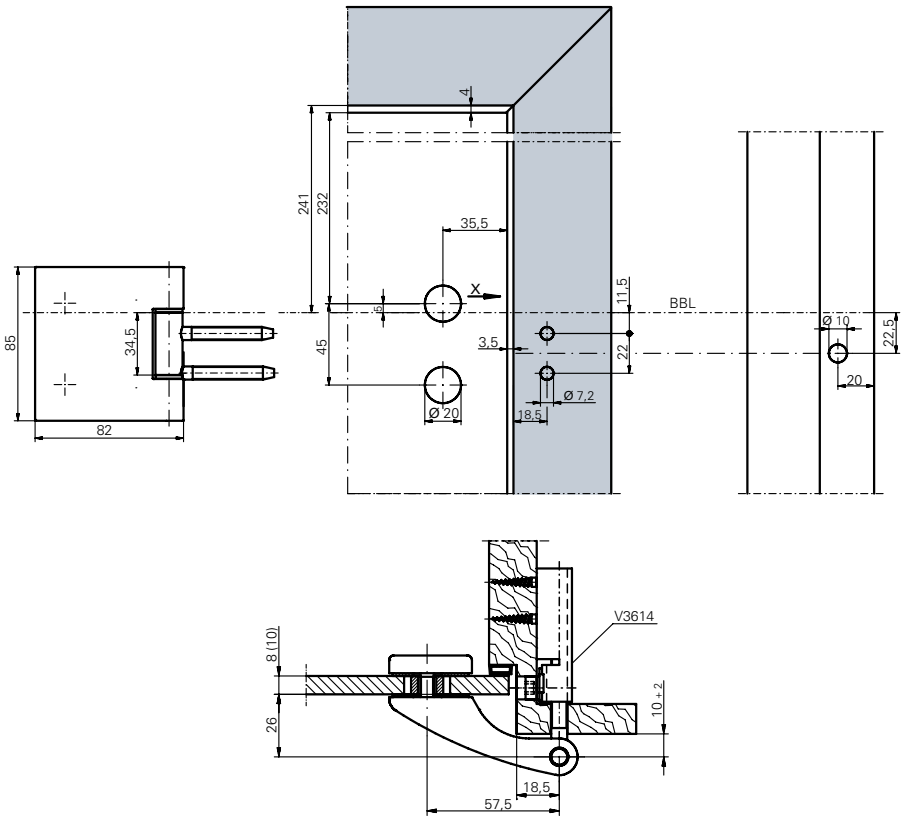

For timber frames

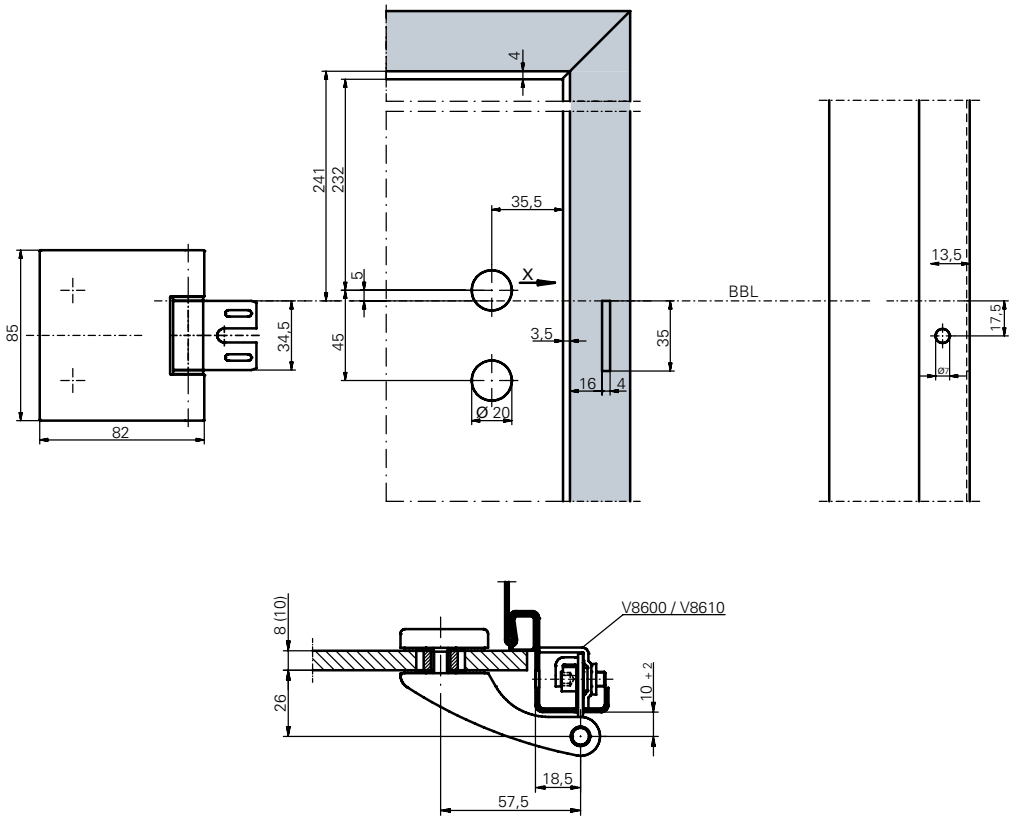

For steel frames

Levers made of aluminium or stainless steel for glass doors with fixing material · without lever

- Suitable for 8 - 10 mm glass (toughened safety glass)
- Same version DIN left and DIN right
- Tested on the basis of **DIN 18251, class 3**
- Can be combined with all ECO as well as standard levers without escutcheon, with 8 mm follower and Ø 16 mm and Ø 18 mm lever neck

Finishes

- Stainless steel
- Aluminium F1 silver anodized

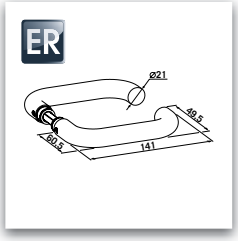

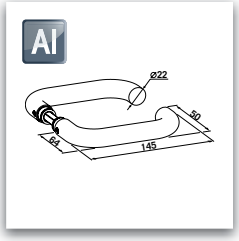

D-110 U-Form	Article number	Description	Material
Studio D-110.ER	006.46	Lever set D-110.ER without escutcheon	Stainless steel
Studio D-110.AI	006.30	Lever set D-110.AL without escutcheon	Aluminium F1 silver anodized

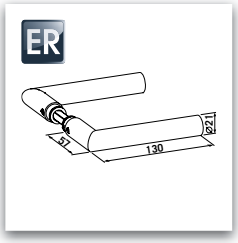

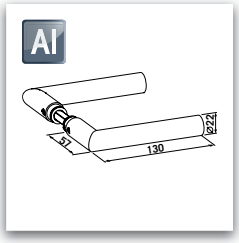

D-310 CL-Form	Article number	Description	Material
Studio D-310.ER	010.46	Lever set D-310.ER without escutcheon	Stainless steel
Studio D-310.AI	010.30	Lever set D-310.AL without escutcheon	Aluminium F1 silver anodized

Swissdoor ApS • Stenhuggervej 2 • 5471 Søndersø • Danmark Telefon +45 86 28 00 00 • mail@swissdoor.dk • www.swissdoor.dk

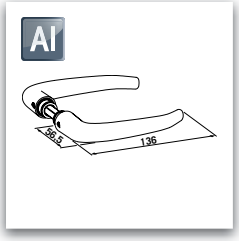

D-410 U-Form, Design	Article number	Description	Material
Studio D-410.ER	008.46	Lever set D-410.ER without escutcheon	Stainless steel
Studio D-410.Al	008.30	Lever set D-410.AL without escutcheon	Aluminium F1 silver anodized

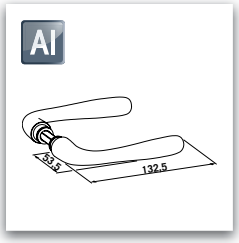

D-730 Xera	Article number	Description	Material
Studio D-730.ER	001.46	Lever set D-730.ER without escutcheon	Stainless steel look, satin
Studio D-730.Al	001.30	Lever set D-730.AL without escutcheon	Aluminium F1 silver anodized

Glass door handles ▪ Glass door patch handles for solid glass doors

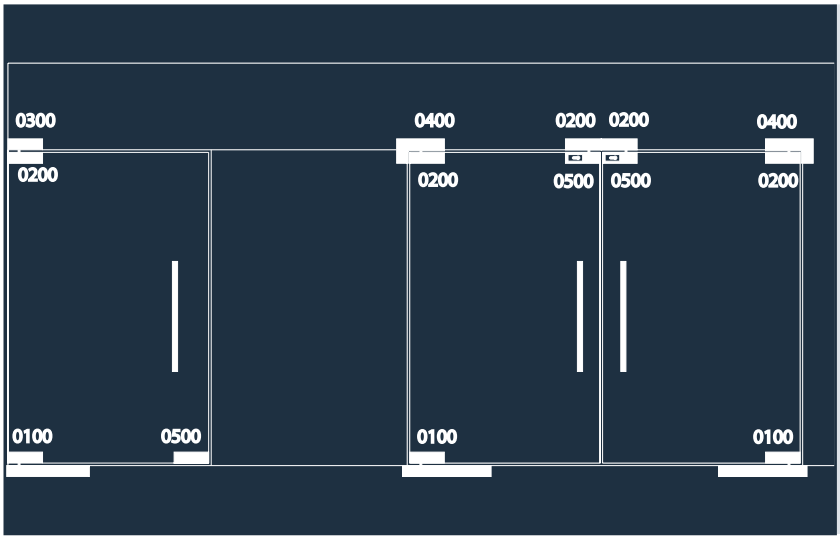

- Suitable for 8 · 10 · 12 mm glass (toughened safety glass)
- Material: Stainless steel
- Finishes: stainless steel look silk satin or polished
- Maximum door weight 80 kg
- Maximum door width 1.100 mm

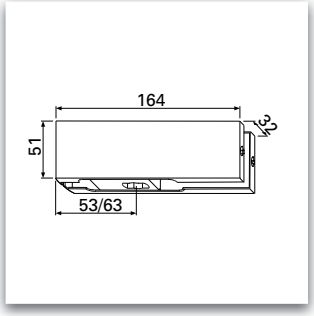

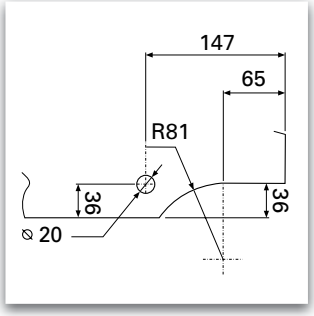

GF-0100 Bottom patch	Article number	Description	Surface
GF-0100 S	801.46	Bottom corner fitting with reception for floor spring axis	Stainless steel satin
GF-0100 P	801.47	Bottom corner fitting with reception for floor spring axis	Stainless steel polished

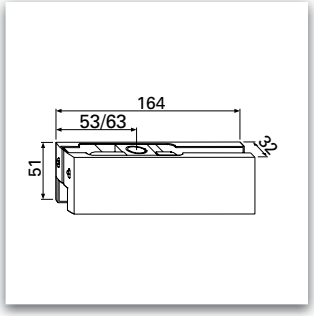

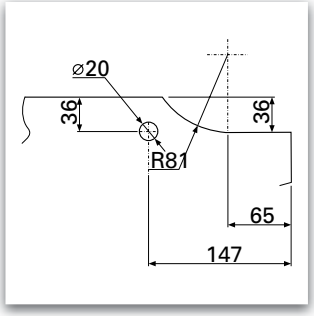

GF-0200 Top patch	Article number	Description	Surface
GF-0200 S	802.46	Top corner fitting with plastic bushing for pin	Stainless steel satin
GF-0200 P	802.47	Top corner fitting with plastic bushing for pin	Stainless steel polished

Swissdoor ApS • Stenhuggervej 2 • 5471 Søndersø • Danmark Telefon +45 86 28 00 00 • mail@swissdoor.dk • www.swissdoor.dk

Glass door handles ▪ Glass door patch handles for solid glass doors

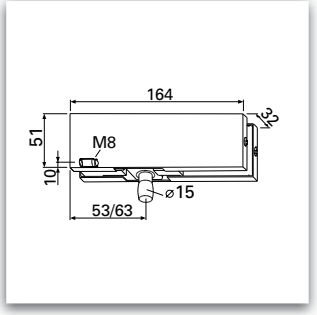

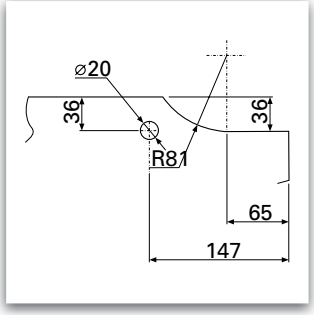

GF-0300 Overpanel patch	Article number	Description	Surface
GF-0300 S	803.46	Overpanel patch with pin	Stainless steel satin
GF-0300 P	803.47	Overpanel patch with pin	Stainless steel polished

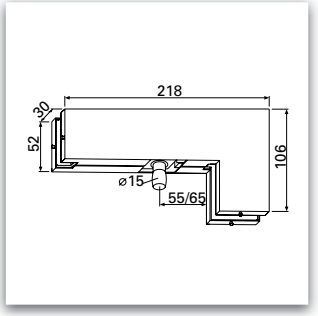

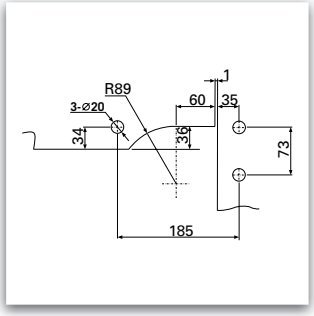

GF-0400 Overpanel patch	Article number	Description	Surface
GF-0400 S	804.46	Overpanel & side patch with pin	Stainless steel satin
GF-0400 P	804.47	Overpanel & side patch with pin	Stainless steel polished

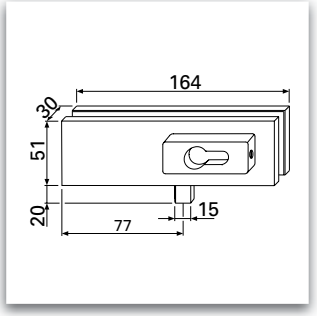

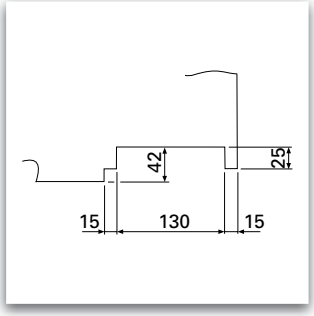

GF-0500 Patch lock	Article number	Description	Surface
GF-0500 S	805.46	Corner lock	Stainless steel satin
GF-0500 P	805.47	Corner lock	Stainless steel polished

Floor spring

Door closer for 1-leaf single action doors / double swing door. Installation in the floor incl. cement case and cover made of stainless steel.

Note:

For the use of solid glass doors you need the respective handles on page 580.

- Dimensions: 306/108/40 mm
- Closing force: 3 or 4, fix
- Back-check: as option, adjustable
  Closing speed: adjustable
- Latching speed: adjustable
- Opening angle: 130°
- Hold-open as option, 90° or 105°
- Fire-proof tested

Swissdoor ApS • Stenhuggervej 2 • 5471 Søndersø • Danmark Telefon +45 86 28 00 00 • mail@swissdoor.dk • www.swissdoor.dk

Glass door handles ▪ Floor spring

EN 1154 A

F

CE

ECO **Floor spring**		Article number	Closing force	Max. door width	Max. door weight
FH 843	Without back-check and hold-open	307048000O00000	EN 3	950 mm	105 kg
FH 843	Without back-check, hold-open 90°	307048000O00001	EN 3	950 mm	105 kg
FH 843	Without back-check, hold-open 105°	307048000O00002	EN 3	950 mm	105 kg
FH 843	With back-check, hold-open 90°	307048000O00003	EN 3	950 mm	105 kg
FH 843	With back-check, hold-open 105°	307048000O00004	EN 3	950 mm	105 kg
FH 844	Without back-check and hold-open	307048000O20000	EN 4	1100 mm	150 kg
FH 844	Without back-check, hold-open 90°	307048000O20001	EN 4	1100 mm	150 kg
FH 844	Without back-check, hold-open 105°	307048000O20002	EN 4	1100 mm	150 kg
FH 844	With back-check, hold-open 90°	307048000O20003	EN 4	1100 mm	150 kg
FH 844	With back-check, hold-open 105°	307048000O20004	EN 4	1100 mm	150 kg

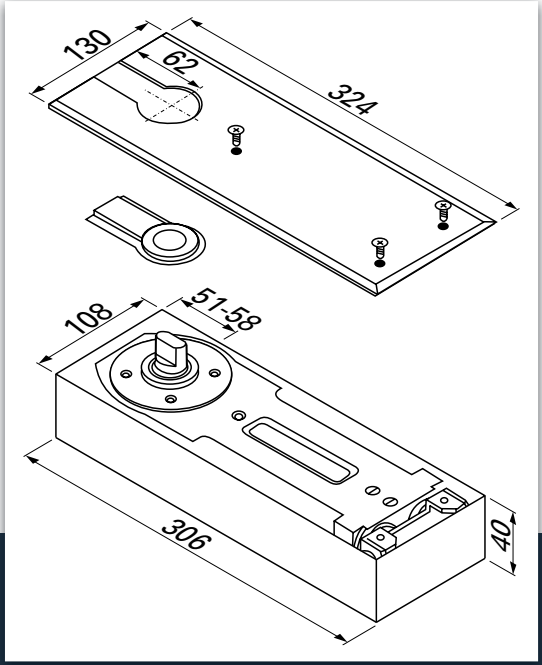

Glass clamping device for
ECO door closer **Newton TS-51**

Clamping device made of aluminium for fixing an ECO door closer onto a glass door

- Suitable for 8 - 10 mm glass (toughened safety glass)
- Same version DIN left and DIN right
- Including threaded holes for the door closer
- Aluminium: colours see table below

Description of the door closer please refer to chapter 2

Glass clamping device	Article number	Description	Material / Color
Glass clamping device.Al	350310600A00000	for door closer Newton TS-51	Al F1 coated
Glass clamping device.Al	350310600E00000	for door closer Newton TS-51	Al white RAL 9016 coated
Glass clamping device.Al	350310600D00000	for door closer Newton TS-51	Al brown RAL 8014 coated
Glass clamping device.Al	350310600Q00000	for door closer Newton TS-51	Al stainless steel look

Swissdoor ApS • Stenhuggervej 2 • 5471 Søndersø • Danmark Telefon +45 86 28 00 00 • mail@swissdoor.dk • www.swissdoor.dk

Floor clamping device for double-leaf glass doors

For locking the passive leaf of double-leaf glass doors.
Body made of aluminium. For 8 mm glass.
Floor socket for Ø 8 mm round bolt.

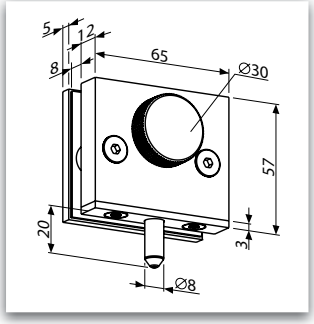

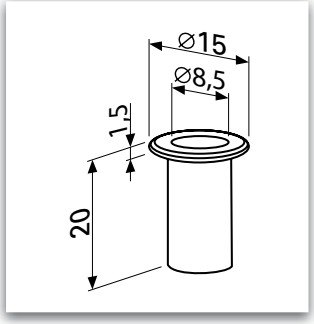

Floor clamping device	Article number	Material
Floor clamping device Al.F1	806.30	Aluminium F1 anodized
Floor clamping device Al.ER	806.46	Aluminium Stainless steel look, satin
Floor socket	807.42	Steel zinc-plated

Floor clamping device for double-leaf glass doors

For locking the passive leaf of double-leaf glass doors.
Body made of aluminium. For 8 mm glass.
Floor socket for Ø 8 mm round bolt.

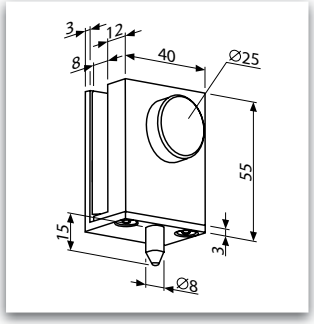

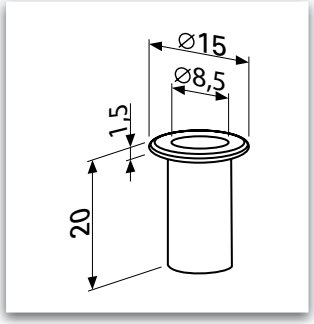

Floor clamping device	Article number	Material
Floor clamping device Al.F1	808.30	Aluminium F1 anodized
Floor clamping device Al.ER	808.46	Aluminium Stainless steel look, satin
Floor socket	807.42	Steel zinc-plated

Frame part for two-part glass door hinges

Frame parts for wooden frames
including plug-in bolts for two-part glass door hinges
ECO Studio Basic and Studio Design

- Same version DIN left and DIN right
- Steel zinc-plated

Studio-Basic/Studio-Design	Article number	Material
2 frame parts for wooden frames Studio Basic/ Design	809.43	Steel zinc-plated

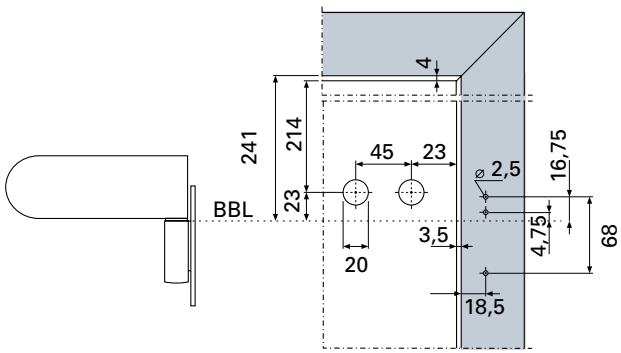

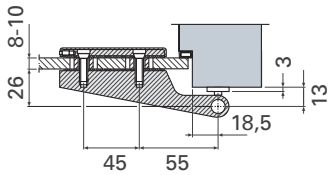

Studio-Basic · straight form

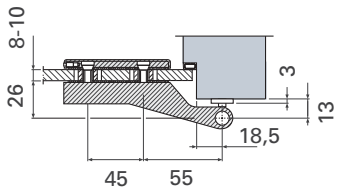

Studio-Design · cranked form

Swissdoor ApS • Stenhuggervej 2 • 5471 Søndersø • Danmark Telefon +45 86 28 00 00 • mail@swissdoor.dk • www.swissdoor.dk

Frame part for three-part glass door hinges

Frame part for three-part glass door hinges ECO Studio Office

- Same version DIN left and DIN right
- With nylon guidance socket
- Steel zinc-plated

Studio-Basic/Studio-Design	Article number	Material
3 frame parts for wooden frames Studio Office	810.43	Steel zinc-plated

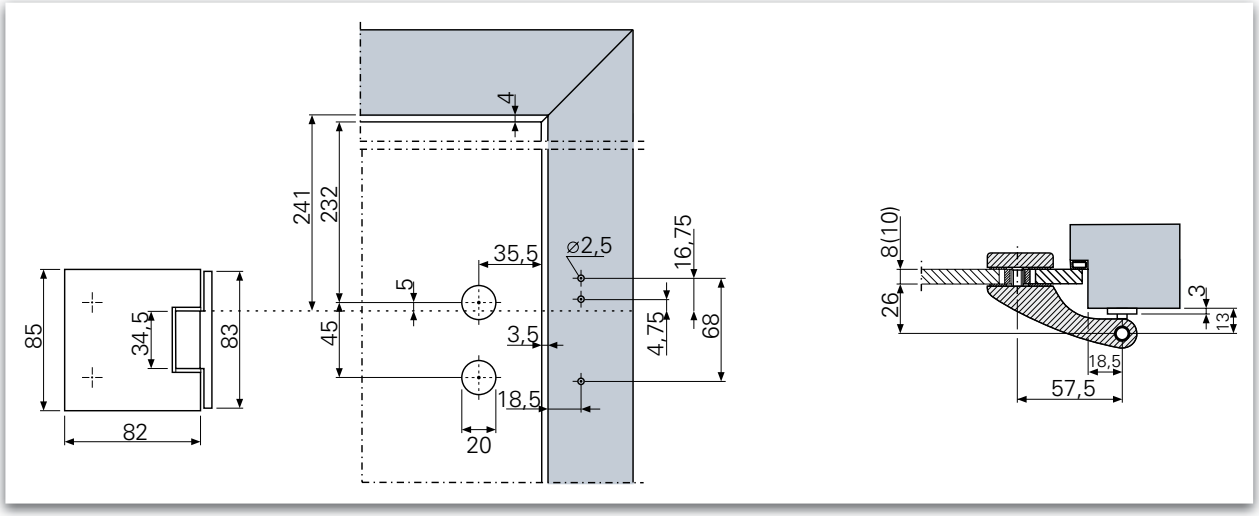

Frame part for three-part glass door hinges
ECO **Studio Office**

- Frame part for reception in wooden frames
- With nylon guidance socket
- Same version DIN left and DIN right
- Material: Steel zinc-plated

Studio-Basic/Studio-Design	Article number	Material
2 frame parts for wooden frames Studio Basic/ Design	99800.43	Steel zinc-plated

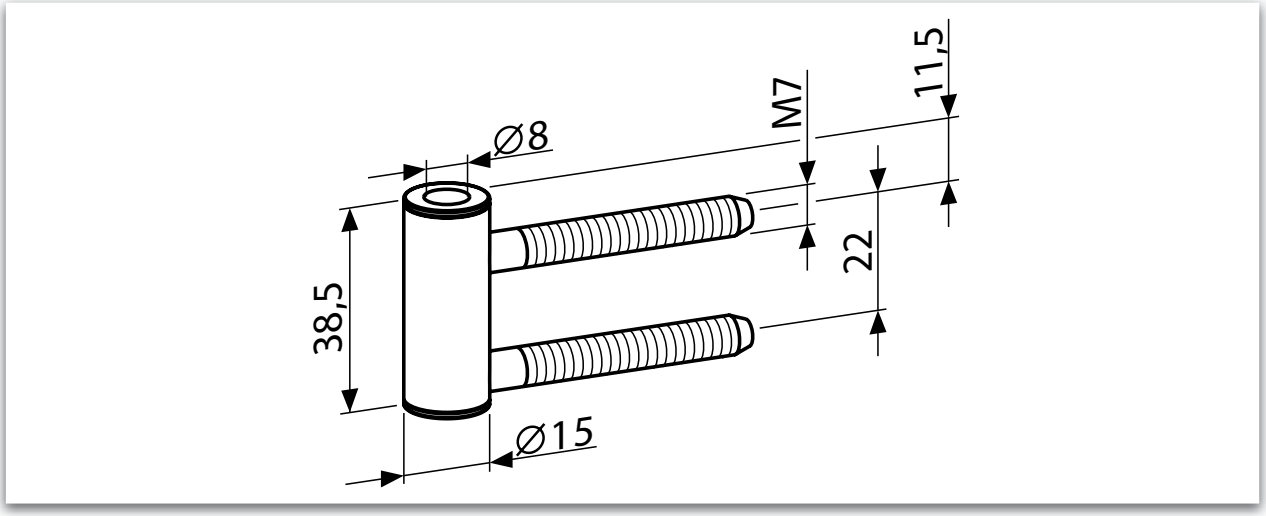

Swissdoor ApS • Stenhuggervej 2 • 5471 Søndersø • Danmark Telefon +45 86 28 00 00 • mail@swissdoor.dk • www.swissdoor.dk

Frame part for three-part glass door hinges
ECO **Studio Office**

Frame parts with adjustable hinge box,
adjustable in three dimensions **OBX-3001-3D**
for **timber frame**

- Same version DIN left and DIN right
- Aluminium F1 silver anodized
- Stainless steel look, satin

Studio-Office lining fame	Article number	Material
1 Frame part.Al	811.30	Aluminium F1 silver anodized
1 Frame part.ER	811.46	Stainless steel look, satin
1 Adjustable hinge box OBX-3001-3D	459301.43	Steel zinc-plated

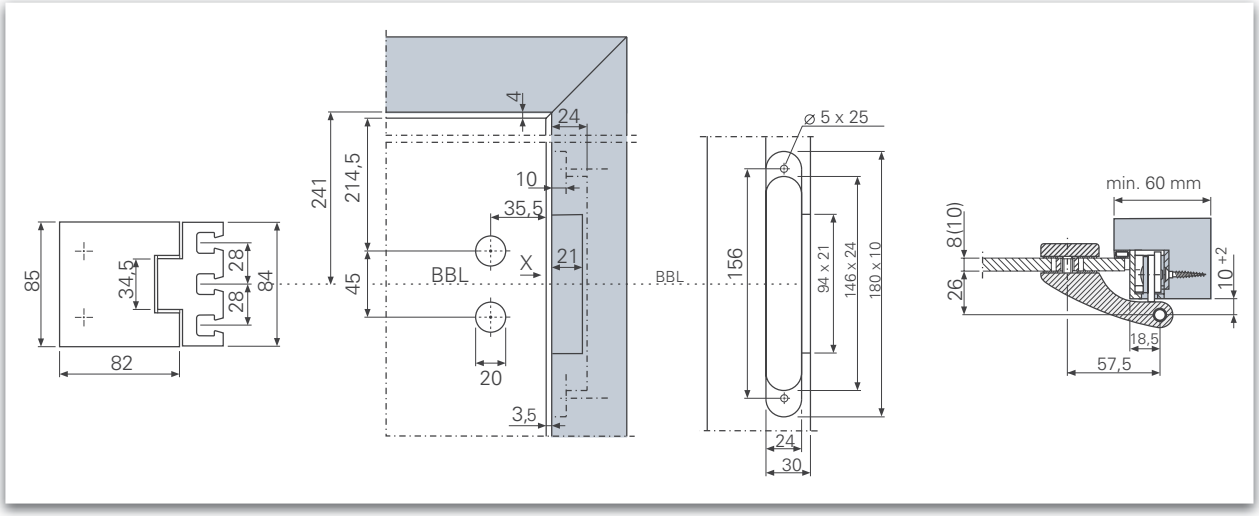

Frame part for three-part glass door hinges
ECO **Studio Office**

Frame parts with adjustable hinge box,
adjustable in three dimensions
OBX-3002-3D for **timber frame**

- Same version DIN left and DIN right
- Aluminium F1 silver anodized
- Stainless steel look, satin

Studio-Office Timber frames	Article number	Material
1 Frame part.Al	811.30	Aluminium F1 silver anodized
1 Frame part.ER	811.46	Stainless steel look, satin
1 Adjustable hinge box OBX-3002-3D	459302.43	Steel zinc-plated

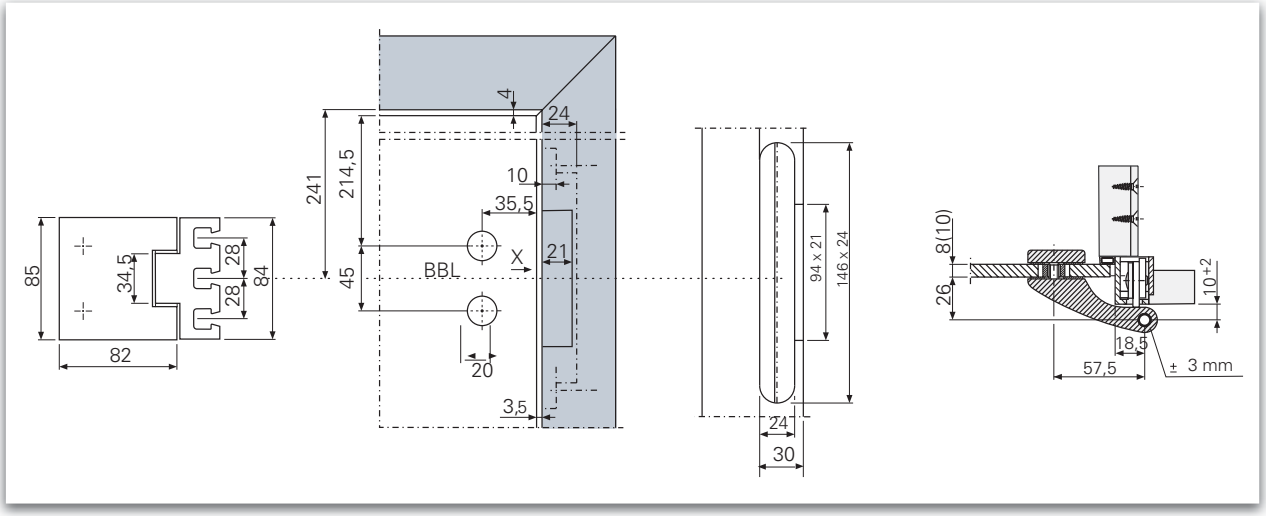

Swissdoor ApS • Stenhuggervej 2 • 5471 Søndersø • Danmark Telefon +45 86 28 00 00 • mail@swissdoor.dk • www.swissdoor.dk

Frame part for three-part glass door hinges
ECO **Studio Office**

Frame parts with adjustable hinge box,
adjustable in three dimensions
OBX-3011-3D for **timber frame**

- Same version DIN left and DIN right
- Aluminium F1 silver anodized
- Stainless steel look, satin

Studio-Office Steel frames	Article number	Material
1 Frame part.Al	811.30	Aluminium F1 silver anodized
1 Frame part.ER	811.46	Stainless steel look, satin
1 Adjustable hinge box OBX-3011-3D	459311.43	Steel zinc-plated
1 Adjustable hinge box OBX-3012-3D	459312.43	Steel zinc-plated

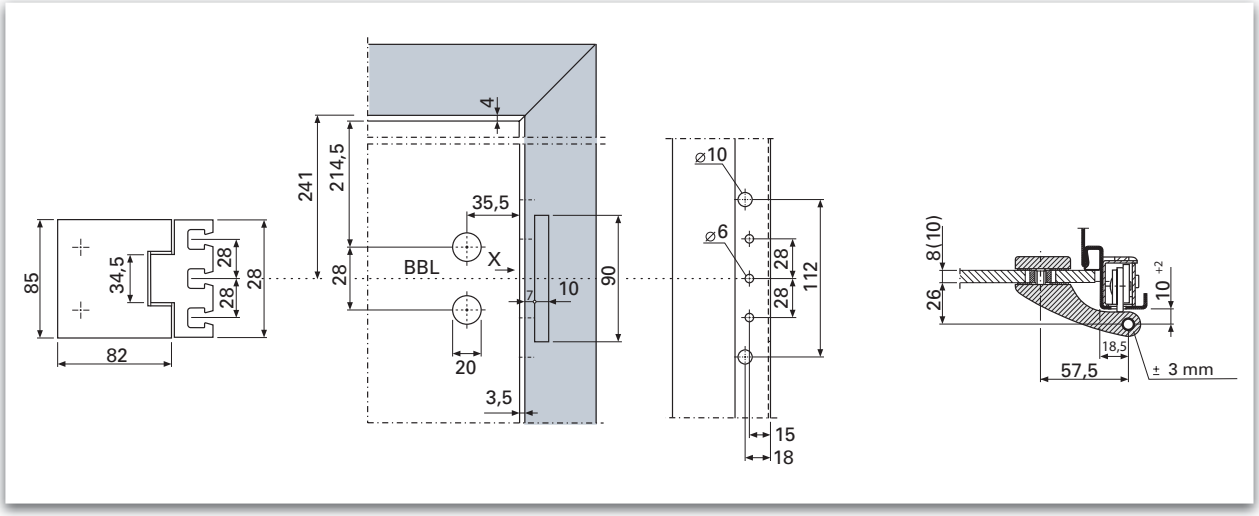

Frame part for three-part glass door hinges
ECO **Studio Office**

Frame parts with adjustable hinge box,
adjustable in three dimensions
OBX-3021-3D for **aluminium frame**
including plug-in bolt

- Same version DIN left and DIN right
- Aluminium F1 silver anodized
- Zinc diecasting · Stainless steel look, satin

Studio-Office Aluminium frames	Article number	Material
1 Frame part.Al	811.30	Aluminim F1
1 Frame part.ER	811.46	Stainless steel look, satin
1 Adjustable hinge box OBX-3021-3D	459321.43	Steel zinc-plated

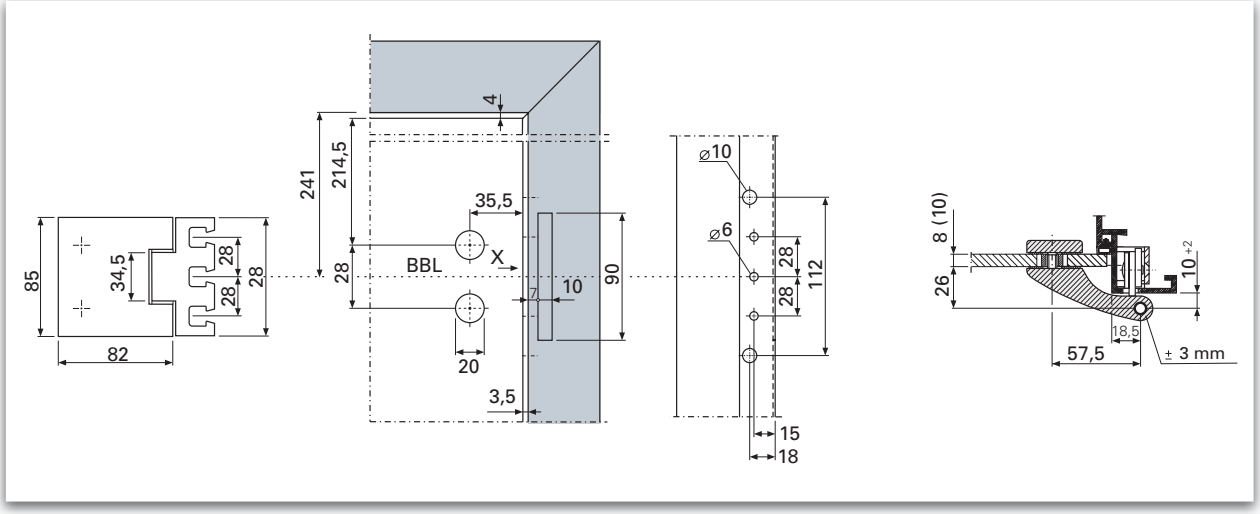

Swissdoor ApS • Stenhuggervej 2 • 5471 Søndersø • Danmark Telefon +45 86 28 00 00 • mail@swissdoor.dk • www.swissdoor.dk

SWISSDOOR
DØRTEKNIK FOR PROFESSIONELLE

Art museum, Stuttgart

ECO Glass door systems
Unique sense of space

Glass doors are the best possibility to create ideal lighting conditions. They create a bright and friendly atmosphere and an unique sense of space.

Glass door handles, hinges and locks with their slim form and their elegant design accentuate the special character and the transparency of glass doors.

They are a main stay of contemporary architecture.

Swissdoor ApS • Stenhuggervej 2 • 5471 Søndersø • Danmark Telefon +45 86 28 00 00 • mail@swissdoor.dk • www.swissdoor.dk

SWiSSDOOR
DØRTEKNIK FOR PROFESSIONELLE

”The total is more than the sum of its parts.“

Aristotle

■ SYSTEM TECHNOLOGY FOR THE DOOR

Swissdoor ApS • Stenhuggervej 2 • 5471 Søndersø • Danmark Telefon +45 86 28 00 00 • mail@swissdoor.dk • www.swissdoor.dk

SWISSDOOR
DØRTEKNIK FOR PROFESSIONELLE

ECO

- Care Notes
- Conditions of Sale
- Product liability
- Index

Care Notes

High-grade stainless steel

The term high-grade stainless steel is used to describe certain particularly corrosion-resistant and hygienic steels. Their surface is non-porous and requires no additional sealing. It cannot flake and micro-organisms and dirt do not adhere to it. Despite all of this, it still requires care! High-grade stainless steel has properties which make it the ideal material in endless areas of application:

- High corrosion resistance
- Heatproof
- Completely recyclable
- Suitable for use with foodstuffs
- High stability

Care Notes, high-grade stainless steel

General care: Stainless steel is an easy-care material, but it is not completely maintenance-free. Rinsing with clear, preferably luke-warm water at regular intervals and subsequent wiping with a soft cloth are indispensable.

As a fundamental rule, never use any abrasive cleaning agents. The milder the cleaning agent the better. They should contain no hydrochloric acid, chlorine etc! Sticky food residue is best removed with aqueous cleaners, grease and oil with alkaline cleaners containing surfactants and/or special acidic cleaners. Grease and grease-bonded pigment dirt can normally be removed easily with neutral detergents or all-purpose cleaners.

Mechanical Cleaning

Stainless steel surfaces can be easily washed with a wet cloth, brushed or moist wiped. Please make sure that you choose the right mechanical cleaning product, however. Microfibre cloths are recommended. Allow the stainless steel cleaning agent, e.g. spray, to soak in briefly, then wipe the surface with the cloth in the direction of polishing. If you are dealing with coarser dirt on large surfaces, it is best to use a brush with natural bristles or special high-grade stainless steel brushes. Some nylon brushes contain abrasive objects and are unsuitable.

Finger marks and handprints on stainless steel surfaces

All stainless steel surfaces that are touched often should be cleaned regularly and disinfected before applying a stainless steel care product. The cleaning agent and disinfectant should be added to preferably warm water.

Stainless steel - identification table

European Norm	European Norm	Germany	USA	Unified Numbering System	Japan	China
Material no.	DIN / EN identification	Colloquial speech	ASTM * (AISI)	UNS**	JIS	China
1.4301	X 5 CrNi18-10	V2A	304	S30400	SUS 304	18 / 10
1.4404	X 5 CrNiMo17-12-2	V4A	316	S31600	SUS 316	17 / 12

* **ASTM** formerly known as the American Society for Testing and Materials (ASTM)
** The **UNS** number (short for "Unified Numbering System for Metals and Alloys")

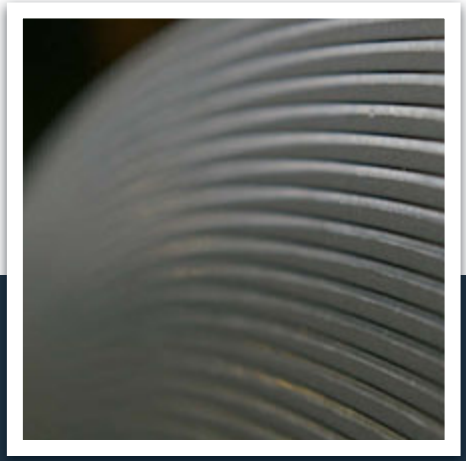

Swissdoor ApS • Stenhuggervej 2 • 5471 Søndersø • Danmark Telefon +45 86 28 00 00 • mail@swissdoor.dk • www.swissdoor.dk

Care Notes

Aluminium

Because it very quickly forms a thin oxide layer when it comes in contact with air, aluminium has a dull, silver-grey appearance. This oxide layer makes aluminium very corrosion resistant. It is a very soft and malleable metal which can be rolled into a thin film. Aluminium is the third most common element in the earth's crust and only occurs in a chemically bonded condition. It is a good electric conductor.

- High corrosion resistance
- Heat resistance
- Completely recyclable
- Suitable for use with foodstuffs

Care Notes, aluminium

Aluminium is a non-ferrous metal and can corrode in the same way as steel. When this happens, however, unlike steel and iron, an oxide layer is formed which protects the surface below from further corrosion. When the oxide forms, however other substances (salts, acids) also have a disintegrating effect on the material which make a coating of corroded aluminium surfaces necessary.

Although aluminium has a very smooth surface, grease and oil can adhere easily to it. For this reason, aluminium parts must always be degreased very thoroughly. Wear gloves so as not to leave any finger marks after cleaning!

Mechanical Cleaning

Dust, stains and light dirt can be removed easily with lukewarm water. Tougher stains, such as plaster and cement residue, can be removed easily by adding a few drops of a conventional cleaning agent to the water. Avoid dry cleaning at all costs as this can scratch the surface. We recommend an anodized aluminium cleaner for all anodized surfaces.

Finger marks and handprints on aluminium surfaces

All aluminium surfaces that are touched often should be cleaned regularly and disinfected before applying an aluminium care product. The cleaning agent and disinfectant should be added to preferably warm water.

Care Notes

Nylon

ECO fittings made of high-quality nylon are the latest trend, particularly with the young generation and in modern buildings. Available in numerous decorative colours, nylon fittings offer the opportunity to set contrasting accents in the home. The material polyamide combines a number of positive properties which help to withstand the high wear and tear to which the fittings are subjected. With distinct shapes and the wide variety of accessory articles in the nylon range, ECO can offer the suitable accoutrements for every door.

- High corrosion resistance
- Particularly high stability
- Highest possible light fastness
- High wear and tear resistance
- Hygienic and harmless to health
- Resistant to electrostatic charging in hot and cold temperatures

Care notes, nylon

One special advantage of nylon is the minimal level of care and cleaning it requires. Dirt can be removed quickly and easily with a little bit of mild soapy water. Special nylon cleaners are recommended for more severe dirt, but the amount of time required here is relatively low too.

To protect or clean plastic, it is best to use warm water and a standard commercial cleaner such as "green soap". Only small amounts of this get the surface clean again and ready for treatment with a care product. There are a whole lot of these on the market, so you can't help but find the right one in a specialized dealership. In most cases, all you have to do is rub them on and polish them off, thereby freshening up the nylon and increasing its resistance.

Mechanical Cleaning

Simply remove normal dirt with water and a gentle household detergent. Never wipe away dry dirt as this can scratch the surface. It can also cause an electrostatic charge in the nylon which attracts even more dirt. Special cleaning agents help to remove tough stains.

Finger marks and handprints on plastic

All nylon surfaces that are touched often should be cleaned regularly and disinfected before applying a nylon care product.
The cleaning agent and disinfectant should be added to preferably warm water.

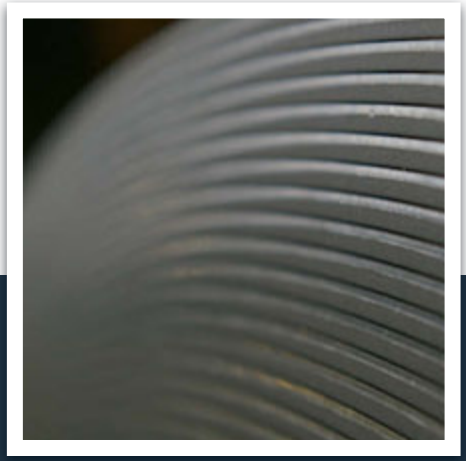

Swissdoor ApS • Stenhuggervej 2 • 5471 Søndersø • Danmark Telefon +45 86 28 00 00 • mail@swissdoor.dk • www.swissdoor.dk

Care Notes

General Information

Just to be on the safe side, try out your preferred cleaning agent at a non-visible place (e.g. the inside) before using it for the first time.

The fundamental rule for all materials is to clean off dust with a wet cloth – never rub it off dry!

Care tips for powder-coated metal surfaces

Powder-coated surfaces are affected by environmental and atmospheric conditions. Regular cleaning maintains the decorative appearance and provides better protection against environmental influences. Warm water with some standard commercial washing up liquid added is recommended for keeping surfaces clean. Please do not use cleaners with scouring agents or any abrasive cloths or pads as these can destroy the coated surface.

How to take proper care of your ECO lock

Profile cylinders and other moving parts should be treated with resin-free oil once or twice a year. Please do not use graphite! If need be, moving parts can also be greased.

How to take proper care of your ECO hinge plate

OBX door hinges from ECO are maintenance-free, so please do not apply any oil or grease! In this way, your doors and fittings will maintain their value and attractive appearance for a long time with a minimum of effort.

Conditions of sale ECO Schulte GmbH & Co. KG

§ 1 Validity of these terms and conditions

1. Deliveries, services and quotations on the part of the Vendor are effected on the basis of these tems and conditions of sale. These shall also be applicable to all future business relations, even if they are not expressly agreed in each case.
2. Any business conditions or delivery terms of the Purchase which conflict with or are supplementary to these terms and conditions of sale will not be recognised. Objection is herewith raised to the inclusion of such terms.

§ 2 Quotation, conclusion of contract and deviating agreements

1. Quotations submitted by the Vendor are without obligation or committment.
2. Acceptances and all orders require the acknowledgement of the Vendor in writing or by telex to have legal force. Order acknowledgements sent by data telecommunications or print-outs from the computer system are valid without signature.
3. The same applies to deviations from these terms and conditions of sale and to any other supplements, amendments or collateral agreements. Amendments subsequent to concluding a contract are not affected by this provision.
4. The written confirmation of order on the part of the Vendor is decisive on the content and extent of deliveries and services. This also applies to orders placed with our commercial agents and / or field work force.

§ 3 Prices

1. The prices are valid as of 01.05.2010 in Euro plus the currently valid rate of value added tax.
2. If a fixed price has not been agreed explicitly, the prices are valid until the delivery date mentioned in the order acknowledgement. If such a price is not agreed upon, the Vendor is bound to the confirmed prices for four months after order acknowledgement. After that period, the Vendor is allowed to adjust the prices (in case of price increases after the order acknowledgement) if shipment is not delayed.
3. Freight charges including packing costs will be invoiced separately and shall be borne by Purchaser.

§ 4 Handling charge for return of goods

If the Vendor takes receipt of any goods returned without defect, presuming he has given his explicit agreement to that return, the Purchaser shall pay a processing charge plus the currently valid rate of value added tax.

§ 5 Delivery and performance time, delays

1. The observance of fixed delivery dates is conditional on the timely receipt from the Purchaser of all necessary details, the provision of documents, the required permits (including any required import licenses) and releases, in particular of diagrams, and the adherence to the agreed terms of payment, including the punctual payment of any advance payments agreed separately in individual cases, fulfilment of any other obligations on the part of the Vendor. If these conditions are not promptly fulfilled, the delivery terms shall be extended accordingly, unless the Vendor is responsible for any delay.
2. Short sales require express written confirmation.
3. Deliveries shall be carried out subject to the possibility to deliver.
4. Defaults in delivery and performance due to Force Majeur, unforeseeable shutdowns or scarcities of raw materials, or other events which are not the responsibility of the Vendor, entitle the Vendor to delay the delivery date for the duration of impediment, even if that date has been specifically agreed. If delivery is impossible or unreasonable for the Vendor due to such circumstances, he is entitled to withdraw partly or wholly from the contract.
5. If the impediment exceeds two months, the Purchaser is entitled to withdraw from the unfulfilled part of the contract, after granting a reasonable extension of time.
6. The delivery date shall be deemed to have been observed if the goods are dispatched, or readiness for shipment has been notified, within the agreed delivery term.
7. If the delivery date or delivery term is not observed on the part of the Vendor, the Purchaser is required to determine a suitably extended delivery date in writing. If the Vendor fails to deliver within the determined extension period, the Purchaser has the right to withdraw from the contract.
8. Whenever the Vendor is responsible for the non-observance of bindingly agreed dates, any claim on the part of the Purchaser for damages for delay following the fruitless expiry of the extended term granted by the Purchaser is limited to a sum amounting to 5% of the invoice value of the delivery or performance affected by such default, provided he can substantiate his claim that he has incurred damages as a result of the delay. Any claims over and above this are inadmissible unless the default is caused by at least gross negligence or culpable violation of an essential contractual obligation on the part of the Vendor. In this case, the claim to compensation is limited to predictable, typically incurred damages. At the request of the Vendor, the Purchaser is obligated to declare within an appropriate period whether he is going to withdraw from the contract due to the delay in delivery and / or demand compensation instead of performance and / or insist on the delivery.
9. At the request of the Vendor, the Purchaser is obligated to declare within an appropriate period whether he is going to withdraw from the contract due to the delay in delivery and / or demand compensation instead of performance and / or insist on the delivery.
10. If despatch, consignment or delivery is postponed at the request of the Purchaser beyond the time provided in the contract, the Vendor may – at the earliest ten days following notification of readiness for despatch – invoice the Purchase for each month or part thereof with storage charges amounting to 0.5% of the amount of the invoice, at most however 5%. The contracting parties are at liberty to prove higher or lower storage costs, respectively.
11. The Vendor is entitled to carry out partial deliveries within a reasonable extent. Partial deliveries shall be regarded as individual transactions. They shall be invoiced as such and are to be paid separately.
12. Short or increased deliveries of up to 10% of the ordered quantity for production or customary reasons are admissable unless any deviation from the contracted amount would be unreasonable for the Purchaser in each individual case.

§ 6 Transfer of risk

1. The risk of accidental loss and / or destruction devolves upon the Purchaser as soon as the consignment has been transferred to the person carrying out the transport or has left the warehouse of the Vendor for the purpose of shipment. This is also applicable if despatch is to be carried out fully or partly by the Vendor's own employees.
2. In addition, the risk devolves upon the Purchaser once he is in default of acceptance following receipt of notification of readiness for despatch from the Vendor.
3. If any goods are taken back in any individual case for reasons for which the Vendor is not responsible and based on special written agreement, the Purchaser shall bear all risks until receipt of the goods by the Vendor.

§ 7 Warranty

1. Immaterial deviations from the agreed condition of the goods and only insignificant impairment of useability do not constitute a warranty claim.
2. Furthermore, warranty claims are not constituted in the case of normal wear and tear or defects which occur after transfer of risk as a result of incorrect or negligent handling, excessive strain, fair wear and tear within normal limits, unsuitable operating materials, defective assembly work, inappropriate working material, non-observance of operation regulations, inadequate maintenance or from specific external influences (e.g. chemical or electrolytical influences) which are not presumed as the basis of the contract.
3. Any improper changes or repair work carried out by the Purchaser or others as well as the consequences of these are excluded from any warranty claims.
4. The Purchaser shall notify the Vendor in writing of any defects without delay, at the latest however within one week of receipt of the delivered goods. Notice of defects which cannot be detected within this period in spite of thorough inspection is to be given in writing immediately after they have been detected.
5. Warranty claims are not admissible if the Vendor is not given the opportunity to view the rejected goods within 10 days of the notice of defect.
6. In case of justified complaints, the Vendor is entitled at his option to rework (repair) or replace the goods.
7. Once the Vendor has supplied defect-free goods within the scope of later performance, the Purchaser shall surrender the defective goods. This is particularly applicable for faulty components if these are replaced by faultless parts within the scope of repair.
8. If the Vendor is not in a position to repair or replace the goods or if he is entitled to refuse the repair or later delivery on the basis of § 439, para. (3) (German Civil Code) or if any delay occurs in the repair or later delivery beyond a reasonable term which lies within responsibility of the Vendor, or if the repair or later delivery fail twice, the Purchaser may at his option demand a price reduction or withdraw from the contract.
9. The Purchaser only has a right of recourse against the Vendor if the legal requirements (e.g. for purchasing consumer goods) have been fulfilled. For this reason there is no recourse if the Purchaser has made any agreements with his customers beyond the statutory warranty claims in the form of guarantees or fair dealing arrangements.
10. Should the statutory regulations relating to the purchase of consumer goods (§§ 474 pp German Civil Code) and in particular to liability to recourse (§§ 478 pp German Civil Code) not be applicable due to lack of statutory regulations, a one-year warranty term shall apply. § 438, para. 1 No. 2 and para. 3 shall remain unaffected.
11. The legal consequences of any violation of commercial obligation to investigate or reprimand remain unaffected.
12. Section § 22 is applicable for any other claims for compensation. This excludes any further or other claims than those regulated in § 11 on the part of the Purchaser against the Vendor and his vicarious agents on the basis of any redhibitory defect.

§ 8 Product data

1. The data and illustrations contained in brochures and catalogues are customary approximations unless it is expressly stated that they are binding. The Purchaser shall satisfy himself of the suitability of the products for their intended use by examining the goods himself.
2. We make express reference to our information on product liability. This information should be observed by the Purchaser.
3. Any drawings and data relating to weights and measurements contained in brochures and catalogues have been drawn up with all due care; we reserve the right to make later corrections should any obvious errors occur.

§ 9 Additional and extended reservation of title

1. The Vendor reserves the ownership rights to the goods supplied by him

Swissdoor ApS • Stenhuggervej 2 • 5471 Søndersø • Danmark Telefon +45 86 28 00 00 • mail@swissdoor.dk • www.swissdoor.dk

1. until the complete purchase price has been paid up and until all existing and future claims by the Vendor against the Purchaser arising from their business relationship have been settled.
2. The Purchaser shall store the delivered goods properly and separately from similar goods from other companies, and shall identify these as originating from the Vendor's delivery.
3. The Purchaser is entitled to sell, install or process the reserved goods within the normal course of business. The normal course of business does not include the processing, installation or sale to such customers who have agreed an assignment ban with the Purchaser. Otherwise, this entitlement can only be revoked if the Purchaser does not duly fulfill his payment obligations.
4. The Purchaser herewith preventively assigns any claims arising from the further sale or other legal consideration (processing, installation, tortious act, insurance, etc) in relation to the reserved goods to the Vendor to the amount of the invoiced sum of the goods supplied. Should the Purchaser incorporate the claim arising from any further sale or other legal consideration in a current account provided for his customer, the balance shall be assigned to the amount of the invoiced sum.
5. The Purchaser is entitled to process such goods supplied under reservation of ownership, provided he is not in default. Processing shall then be effected by the Purchaser on behalf of the Vendor. The Vendor shall acquire title to the new goods as the manufacturer within the sense of § 950 BGB (German Civil Code), whilst the Purchaser shall hold the goods in trust for the Vendor. If such reserved products are processed together with other goods which were not supplied by the Vendor, the Vendor is entitled to co-ownership of the new goods in the proportion of the value of the reserved goods to the other processed goods at the time of processing. The goods resulting from such processing are subject to the same conditions as the reserved goods.
6. The Vendor authorizes the Purchaser to collect in his own name that claim for payment of his invoice assigned to the Vendor. This collection authorization can only be revoked if the Purchaser does not fulfill his commitments.
7. In the case of culpable contravention on the part of the Purchaser – in particular default of payment – the Vendor is entitled to notify the debtor of the assignment of the above claims. In addition, the Vendor is then entitled to take back the reserved goods or, if necessary, to demand assignment of the claim and delivery against others. The repurchase of the reserved goods does not constitute a revocation of contract. § 449 para. 2 BGB (German Civil Code) excluded.
8. The Vendor shall, on request of the Purchaser, release part of the secured goods if their value provably exceeds the claims by more than 20%.

§ 10 Payment

1. All invoices issued by the Vendor are due within 14 days of drawing up the invoice (based on invoice date) less 2% or within 30 days of date of invoice without deduction. If the Purchaser does not pay within 30 days of date of invoice, he shall be regarded as in default, even without a reminder for payment. If the time of receipt of invoice or statement of payments due or the receipt itself is uncertain, the Purchaser, who is not the consumer, shall be regarded as in default 30 days after the due date and receipt of the equivalent at the latest.
2. Payments shall be regarded as effected once the Vendor can dispose of the amount. In the case of cheques or bills of exchange, payment shall only then be regarded as effected when the cheque or bill has been honoured.
3. If the Purchaser is not the consumer and is in default, the Vendor may demand interest amounting to 5% p.a. above the basic interest rate according to § 247 German Civil Code of the Deutsche Bundesbank prevailing at the time. If the Purchaser is not a consumer, the interest on arrears is 8% p.a. above the respective basic interest rate of the Deutsche Bundesbank according to § 247 German Civil Code. The Purchaser, on the other hand, cannot plead that the Vendor has suffered only minor damage or no interest damage at all. The Vendor is, however, at liberty to calculate any default interest on the basis of costs which have provably been incurred.
4. The Vendor is not obligated to accept bills of exchange. If such bills are accepted in individual cases in fulfillment on the basis of special arrangements, the bank discount and collection charges upon maturity of the claim shall be borne by the maker of the bill and are payable immediately in cash.
5. Independent of the conditions of payment separately agreed in each case, any outstanding debts shall become payable to the Vendor immediately if any circumstances on the part of the Purchaser occur which make adherence to any payment arrangements unreasonable. This is the case by any justified indication of a significant deterioration in the financial circumstances of the Purchaser, in particular upon suspension of payments, cheque or bill protests or default of payment, once it becomes apparent that, as a result, the Vendor's claim to payment is endangered due to the Purchaser's ability to pay. In this case, the Vendor is additionally entitled to set the Purchaser a deadline by which the Purchaser, at the Vendor's option, shall effect consideration concurrent with performance or arrange for additional security. The Vendor is entitled to withdraw from the contract upon fruitless expiry of the deadline set by the Vendor.
6. The Purchaser is only entitled to hold back payment within the scope of express warranty following justified notification of defect and to an extent which is in due proportion to the redhibitory defect incurred. For the remainder, the Purchaser's right to reserve payment is excluded.
7. The Purchaser is only entitled to offset claims if his counterclaim is undisputed or has been finally and conclusively decided.
8. ECO is entitled to assign the claims from the business relationship with the Purchaser.

§ 11 Indemnification / restriction of liability

1. Claims for damages on the part of the Purchaser for any legal grounds whatsoever, in particular due to breach of duties arising from contractual obligations and from tortious acts, are excluded unless a cogent liability according to product liability laws occurs, in cases of liability for wilfull or negligible conduct, resulting from fatal or physical inquiry or violation of health, or due to infringement of significant contractual obligations or if the Vendor has given a guarantee of condition of goods.
2. The claim for damages for the violation of significant contractual obligations is, however, restricted to predictable, contractually typical damages unless a limitiation is excluded for any other reason due to wilfull or negligible acts, or resulting from fatal or physical injury or violation of health.
3. For the event that justified claims for later performance are raised under the legal provisions against the Purchaser by his customer or its customer, the Purchaser shall allow the Vendor the possibility to undertake such later performance within a reasonable period before obtaining „replacement" elsewhere. The Purchaser shall impose this obligation on his customer accordingly. Should the Purchaser violate these obligations, the Vendor reserves the right to reduce the indemnity to the amount which he would have incurred in the event of performing himself. § 444 German Civil Code remains unaffected.
4. Indemnity for expenditure connected with non-performance on the part of the Purchaser to his customer are also excluded if the Purchaser, contrary to his duty to mitigate damage, does not make use of his right to refuse this type of later performance or both types of later performance due to disparity of costs.
5. Claims on the part of the Purchaser resulting from expenses required for the purpose of later performance, in particular transport, freight, labour and material costs, are excluded if the expenses increase because the object of delivery has been brought to a different place than the location agreed in the contract, unless the transfer is in accordance with its designated use. This applies for liability to recourse accordingly.
6. Claims for damages and indemnification in connection with non-conformance of the goods are goverened by the binding terms of limitation applicable to such claims.

§ 12 Data protection

1. The Purchaser's person-related data acquired by the Vendor directly or through others in the course of the business relationship will be stored by the Vendor in an automatic file and processed for business communication purposes (reference is made to federal data protection laws).
2. The Purchaser consents to the Vendor processing any such personal data which comes to his knowledge directly or through others.

§ 13 Place of performance, applicable law, legal venue, separability

1. The Vendor reserves his ownership rights and proprietary exploitation rights to cost estimates, drawings or other documents (referred to in the following as „documents"), without restriction. The documents may not be made accesible to third parties except with the prior consent of the Vendor and shall be returned to the Vendor on request without delay if the order is not placed with the Vendor.
2. The place of performance for the reciprocal main and collateral obligations arising from the contractual relationship and all rights and obligations arising from the contractual relationship is Menden.
3. These terms and conditions of sale and the entire legal relations between the Vendor and the Purchaser are subject to the laws of the Federal Republic of Germany precluding the United Nations universal purchasing law (United Nations Convention on Contracts for The International Sale of Goods – CISG).
4. The legal venue for all disputes arising directly or indirectly from the contractual relationship is Menden if the Purchaser is a company, a legal personality in public law or a severality in public law.
5. If any other provisions of these terms and conditions of business ar any provision of other agreements is or becomes ineffective, this shall not affect the effectiveness of any of the remaining provisions or agreements.

Product information and use of ECO Handle Technology

§ 1 Product information and designated use

1. The mounting systems manufactured by ECO are operating aids with which opening and closing and / or blocking actions can be carried out on doors, glazed doors and window elements.

2. It is essential that the fixing material supplied with these products is used and that mounting is carried out in accordance with the mounting instructions / specifications.

§ 2 Improper use of the products

In particular the following constitute improper use of the hardware systems for doors and windows, i.e. undesignated use of the products:

- The incorporation or attachment of external or non-designated objects in the hardware system
- The use of auxiliary tools for operating
- Using the hardware as replacement for missing wall stoppers
- Misuse of the hardware as suspension devices for heavy loads
- If, contrary to the recommendation of the lock and hardware industry, hardware with panic locks are in constant operation and used for permanent operations instead of only in emergencies
- If the surface of the hardware system is damaged due to the use of sharp or hard objects
- The use of fixing material of other manufacturers

Sooner or later, this type of misuse will lead to a damage and the products will no longer possess the characteristic features defined by the manufacturer.

§ 3 Product services

1. Product services are only partially regulated by standards. Many performance ratings have developed through long experience and are viewed as the joint property of the building hardware industry. The content of standards and these experimental values can also be used by analogy for any door hardware which there are no express regulations.

2. In particular following standards apply:
- EN 1906: General basic value for door hardware and accessory
- DIN 18273: Special rules for fire- and smoke control doors
- DIN 18257: Minimum safety requirements of security hardware

3. The door hardware should be replaced whenever the proper function is no longer guaranteed in spite of maintenance and care, or if it presents any risk of injury.

4. Further development of the products is carried out on an ongoing basis and production is subject to quality assurance. We reserve the right to make technical changes.

§ 4 Product maintenance

1. The user must observe the correct position of the hardware and fixing devices.

2. The products are subject to natural wear which depends on the material and place of installation. All moving parts should therefore be subject to annual maintenance, i.e. the snug fit, tightness of screwed connections, etc. should be checked at regular intervals. Only water and gentle cleaning agents containing no corrosives as well as soft cleaning cloths should be used to care for the hardware systems.

3. Aluminium, plastics, stainless steel and brass are the main materials used in production. Specific reference is made to the various care and maintenance requirements for these different materials.

§ 5 Liability to inform and instruct

1. The following literature is available for your information and instruction:

- Catalogues and brochures
- Tendering texts
- Purchasing information
- Quotation records
- Mounting and operating instructions
- DIN standards

2. To ensure the functional efficiency of hardware systems:

- Architects, planners and other persons involved are advised to request all required product information from us and to observe the same
- Specialist dealers are advised to observe the product information and references in the price lists and catalogues and in particular to request all necessary instructions from us and pass these on to the person handling the mounting systems
- Persons installing the hardware are advised to obtain and observe all information relating to the product and in particular to request instructions for operating and caring for the same from us and to pass these on to the customer / end user

All persons involved should take care that the hardware systems are properly mounted and installed and that the respective end user receives appropriate directions.

Swissdoor ApS • Stenhuggervej 2 • 5471 Søndersø • Danmark Telefon +45 86 28 00 00 • mail@swissdoor.dk • www.swissdoor.dk

Product information and use of ECO Lock Technology

§ 1 Product information and designated use

1. The locks manufactured by ECO are intended for locking and bolting of doors.

2. The correct configuration with approved door hardware, fastenings and accessories is essential to ensure the designated use of the locks. Installation must be carried out in accordance with mounting instructions, or with due regard to the DIN standards, including maintenance. Locks for doors with special functions must be selected according to regulations and should be duly identified, if necessary.

§ 2 Improper use of the products

In particular the following constitute improper use of the locks, i.e. undesignated use of the products:

- Misusing the locked bolt to keep the door open
- Adjusting the hinges or lowering the door if this results in an increase or reduction of the required door clearance
- Any assembly or later adjustment of the locking elements which would prevent normal functions
- The incorporation or attachement of external or non-designated objects in the lock or the striking plate
- The application to the lock assembly of loads exceeding normal manual force
- Opening a double-leaf door using the passive leaf, unless this is duly authorized
- The use of inappropriate fastening materials (deviating measurements or incorrect adjustments)
- Interering or tampering with the lock or striking plate which results in any change of the structure, operation or function
- Simultaneous operation of the door handle and lock system
- Closing the door while reaching between door leaf and door frame

Sooner or later, this type of misuse will lead to a damage and the products will no longer possess the characteristic features defined by the manufacturer.

§ 3 Product services

1. Product services are only partially regulated by standards. Many performance ratings have developed through long experience and are viewed as the joint property of the building hardware industry. The content of standards and these experimental values can also be used by analogy for any locks which there are no express regulations.

2. In particular standards **DIN 18250, DIN 18251, DIN 18252, DIN 18254, DIN 18255, DIN 18257, DIN 18273** and the standards for door mountings are applicable in which both the basic and the supplementary requirements of locks are specified.

3. The locks should be replaced whenever the proper function is no longer guaranteed in spite of maintenance and care, or if it presents any risk of injury.

4. Further development of the products is carried out on an ongoing basis and production is subject to quality assurance. We reserve the right to make technical changes.

§ 4 Product maintenance

1. The user must observe the correct function of the locks.

2. The products are subject to natural wear which depends on the material and place of installation. Subject to the amount of use, maintenance of the locks should be carried out once a year, i.e. greased at regular intervals using suitable lubricants. Only non-corroding cleaning agents should be used to care for the locks.

3. A variety of different materials are used in the lock production. Specific reference is made to the various care and maintenance requirements for these different materials.

§ 5 Liability to inform and instruct

1. The following literature is available for your information and instruction:

- Catalogues and brochures
- Quotation records
- Tendering texts
- Mounting and operating instructions
- Purchasing information
- DIN standards

2. To ensure the functional efficiency of the locks:

- Architects, planners and other persons involved are advised to request all required product information from us and to observe the same

- Specialist dealers are advised to observe the product information and references in the price lists and catalogues and in particular to request all necessary instructions from us and pass these on to the person handling the mounting systems

- Persons installing the locks are advised to obtain and observe all information relating to the product and in particular to request instructions for operating and caring for the same from us and to pass these on to the customer / end use.

All persons involved should take care that the locks are properly mounted and installed and that the respective end user receives appropriate directions.

Product information and use of ECO Door Closer Technology

Attention should be paid to the following information about door closers for revolving doors, following the liability of the manufacturer for its own products defined in product liability law (§ 4 ProdHaftG). Failure to observe it will release the manufacturer from liability obligation.

Door closers serve to close revolving doors again after the manual opening procedure. The closing process takes place adjustably and hydraulically cushioned. The necessary closing force in relation to the leaf widths is established in EN 1154. The information of the manufacturer will be decisive in the case of different areas of use. Door closers are used in installed revolving doors made of metal, wood or plastic and their appropriate combinations of materials. The type of installation and the position is precisely stipulated in the case of fire protection doors, fire break and smoke protection doors or other standardized, self-closing doors. Differences from this will not correspond to use in accordance with regulations. The use of door closers in accordance with regulations presupposes vertical, easy-running doors with properly attached door closers. Installation and setting must be carried out expertly in accordance with the information of the manufacturer.

Door closers with large closing moments must be used in the case of unfavourable local conditions (e.g. the effect of wind). Door closers with back-check must be used, particularly in the case of revolving doors that open outwards and are subject to wind. The back-check contributes to the protection of people, door elements, adjoining walls and objects, without restricting the door opening angle. If it is not possible to rule out the possibility of the door leaf striking the frame near to the door rotation axis, because of the structural conditions of the door, a stopper that will restrict the maximum opening angle of the door must be set. A fixed open position of revolving doors can only be achieved with additional special metal fittings or integrated construction elements. The fittings must be permitted in relation to building supervision by the Institut for Bautechnik in the case of fire protection doors, fire break and smoke protection doors (attention must be paid to evidence of the suitability of the door).

Door closers on revolving doors for damp rooms, unprotected external installation and use in environments with aggressive, corrosion-promoting air content or surroundings and those that are subject to high or extremely low temperatures will require special versions. Installation housing for floor springs must be sealed against dirt after installation.

If floor springs are subject to penetrating water, e.g. in damp rooms, or without rain protection in the case of external doors, the space between the cement casing and the door closer housing must be filled with a suitable sealing compound.

If necessary, attention must be paid to binding legal regulations before installing door closers and bringing them into operation.

Incorrect use

Incorrect use of door closers for revolving doors - will say the use of the product not in accordance with regulations - will be present in particular if

- Obstructions in the doors sliding into the closing area, jamming seals wooden wedges etc constrain the closing process
- Incorrect or improper installation and / or setting is present
- There is an intervention in the area between the door frame and the door leaf (danger of injury!)
- Function in accordance with regulations is expected, beyond the promised characteristics, in the case of unusual low-pressure or overpressure effecting the door, e.g. storm
- Door closers are used for other reasons than closing the door

or

- The chosen door closer size does not match the recommendation of the manufacturer

Product services

Special requirements must be discussed with the manufacturer and agreed by the manufacturer, provided that the product services are not described in catalogues, brochures, instructions etc in correct terms. The norm EN 1154 will be decisive. All basic and additional requirements are established to a great extent in this norm. The suitability of door closers for use is dependent of the frequency of operation, the mode of operation, the environmental influences and care, among other factors. Door closers must be replaced as soon as a perfect, safely functioning closing process is no longer guaranteed.

Swissdoor ApS • Stenhuggervej 2 • 5471 Søndersø • Danmark Telefon +45 86 28 00 00 • mail@swissdoor.dk • www.swissdoor.dk

Index

	Product range	Chapter No.	Chapter	Page
A				
Accessory GBS 72	Accessories	4	Panic, Lock and Bolting Technology	472
Accessory GBS 73	Accessories	4	Panic, Lock and Bolting Technology	473
Accessory GBS 82, 83	Accessories	4	Panic, Lock and Bolting Technology	475
Accessory GBS 84	Accessories	4	Panic, Lock and Bolting Technology	476
Accessory GBS 94	Accessories	4	Panic, Lock and Bolting Technology	478
Accessory GBS 98	Accessories	4	Panic, Lock and Bolting Technology	480
Accessory set FKL	Accessories	2	Door Closer Technology	169
Accessory set for BB-insert	Accessories	3	Fittings Technology	343
Accessory set MOL	Accessories	2	Door Closer Technology	169
Adaptor profile	Accessories	2	Door Closer Technology	167
Adjustment sleeves	Accessories	3	Handle Technology	344
Anchor plate	Accessories for combination with ECO hold-open devices (except ITS / FTS)	2	Door Closer Technology	172
Anchor plate	Accessories for combination with ECO hold-open devices	2	Door Closer Technology	176
Arms	Accessories	2	Door Closer Technology	163
Axis extension	Accessories FDC-B	2	Door Closer Technology	178
B				
BB lock	Locks	6	Glass Door Technology	596
Brake for holding magnet	Accessories FDC-B	2	Door Closer Technology	178
BS 44	Door stop	3	Handle Technology	333
BS 45	Door stop	3	Handle Technology	333
BS 65	Accessories FDC-B Door stop	3	Handle Technology	181 333
C				
Cable plan	FDC-B	2	Door Closer Technology	154
Care Notes	Care Notes	7	Conditions of sale, Care Notes, Index	630
Coat hook made of nylon	Accessories	3	Handle Technology	371
Conditions of sale	Conditions of sale	7	Standards	634
Control device	Accessories FDC-B	2	Door Closer Technology	179
Counter lock	Locks	6	Glass Door Technology	605
Cover plates round - round	OBX-3098	5	Hinge Technology	579
Cover plates round - square	OBX-3099	5	Hinge Technology	579
Cover plates square - round	OBX-3097	5	Hinge Technology	578
Cover plates square - square	OBX-3096	5	Hinge Technology	578
D				
D-110	Long plate security handle set ES 0 with friction-bearing technology (OGL) round	3	Handle Technology	305
D-110	Long plate security set ES 0 with friction-bearing technology (OGL) square	3	Handle Technology	306
D-110	Long plate security handle sets ES 1 with friction-bearing technology (OGL) round	3	Handle Technology	303
D-110	Long plate security handle set ES 1 with friction-bearing technology (OGL) square	3	Handle Technology	304
D-110	Long plate security handle set ES 2 with friction-bearing technology (OGL) round	3	Handle Technology	301
D-110	Long plate security handle set ES 2 with friction-bearing technology (OGL) square	3	Handle Technology	302
D-110	Long plate security handle set ES 3 with friction-bearing technology (OGL) round	3	Handle Technology	300
D-110	Long plate handle (L) with ball-bearing technology (OKL)	3	Handle Technology	201
D-110	Round rose handle with ball-bearing technology (OKL)	3	Handle Technology	200
D-110	Long plate handle (L) with friction-bearing technology (OGL)	3	Handle Technology	207
D-110	Round rose handle with friction-bearing technology (OGL)	3	Handle Technology	202

Index

	Product range	Chapter No.	Chapter	Page
D-110	Round rose handle with friction-bearing technology (OGL) made of nylon	3	Handle Technology	203
D-110	Short plate handle (K) with friction-bearing technology (OGL)	3	Handle Technology	204
D-110	Short plate handle (K) with friction-bearing technology (OGL)	3	Handle Technology	205, 206
D-110	Short plate security handle sets ES 1 with friction-bearing technology (OGL) round	3	Handle Technology	307
D-110	Round rose handle with friction-bearing technology (SGL)	3	Handle Technology	208
D-111	Long Plate security handle set ES 0 with friction-bearing technology (OGL) round	3	Handle Technology	311
D-111	Long Plate security handle set ES 0 with friction-bearing technology (OGL) square long plate	3	Handle Technology	306
D-111	Long Plate security handle set ES 2 with friction-bearing technology (OGL) square profile fitting	3	Handle Technology	310
D-115	Oval rose handle for profile frame doors (OGL)	3	Handle Technology	266
D-116	Handle set for profile frame doors ES 1 with friction-bearing technology (OGL)	3	Handle Technology	320
D-116	Oval rose handle for profile frame doors (OGL)	3	Handle Technology	270
D-116	Security handle set for profile frame doors with friction-bearing technology (OGL)	3	Handle Technology	322
D-120	Short plate handle (K) with friction-bearing technology (OGL)	3	Handle Technology	213
D-120	Round rose handle with friction-bearing technology (OGL)	3	Handle Technology	212
D-120	Round rose handle with friction-bearing technology (SGL)	3	Handle Technology	214
D-190	Round rose handle with ball-bearing technology (OKL)	3	Handle Technology	218
D-210	Round rose handle with friction-bearing technology (OGL)	3	Handle Technology	222
D-210	Short plate handle (K) with friction-bearing technology (OGL)	3	Handle Technology	223
D-210	Round rose handle with friction-bearing technology (SGL) Round rose handle	3	Handle Technology	224
D-310	Long plate handle (L) with ball-bearing technology (OKL)	3	Handle Technology	229
D-310	Round rose handle with ball-bearing technology (OKL)	3	Handle Technology	228
D-310	Long plate handle (L) with friction-bearing technology (OGL)	3	Handle Technology	233
D-310	Round rose handle with friction-bearing technology (OGL)	3	Handle Technology	230
D-310	Short plate handle (K) with friction-bearing technology (OGL)	3	Handle Technology	231
D-310	Oval rose handle with friction-bearing technology (OGL)	3	Handle Technology	274
D-310	Security handle sets ES 1 with friction-bearing technology (OGL) round	3	Handle Technology	317
D-310	Security handle sets ES 1 with friction-bearing technology (OGL) round short plate (K)	3	Handle Technology	319
D-310	Security handle sets ES 1 with friction-bearing technology (OGL) square	3	Handle Technology	318
D-310	Security handle sets ES 2 with friction-bearing technology (OGL) round	3	Handle Technology	315
D-310	Security handle sets ES 2 with friction-bearing technology (OGL) square	3	Handle Technology	316
D-310	Security handle sets ES 3 with friction-bearing technology (OGL) round	3	Handle Technology	314
D-310	Round rose handle with friction-bearing technology (SGL)	3	Handle Technology	234
D-315	Oval rose handle with friction-bearing technology (OGL)	3	Handle Technology	278
D-315	Security handle sets for profile frame doors with friction-bearing technology (OGL)	3	Handle Technology	324
D-315	Security handle set for profile frame doors ES 1 with friction-bearing technology (OGL)	3	Handle Technology	325
D-330	Long plate handle (L) with ball-bearing technology (OKL)	3	Handle Technology	239
D-330	Round rose handle with ball-bearing technology (OKL)	3	Handle Technology	238
D-330	Long plate handle (L) with friction-bearing technology (OGL)	3	Handle Technology	242

Swissdoor ApS • Stenhuggervej 2 • 5471 Søndersø • Danmark Telefon +45 86 28 00 00 • mail@swissdoor.dk • www.swissdoor.dk

Index

	Product range	Chapter No.	Chapter	Page
D-330	Round rose handle with friction-bearing technology (OGL)	3	Handle Technology	240
D-330	Short plate handle (K) with friction-bearing technology (OGL)	3	Handle Technology	241
D-335	Oval rose handle with friction-bearing technology (OGL)	3	Handle Technology	282
D-410	Long plate handle (L) with ball-bearing technology (OKL)	3	Handle Technology	247
D-410	Round rose handle with ball-bearing technology (OKL)	3	Handle Technology	246
D-410	Long plate handle (L) with friction-bearing technology (OGL)	3	Handle Technology	250
D-410	Round rose handle with friction-bearing technology (OGL)	3	Handle Technology	248
D-410	Short plate handle (K) with friction-bearing technology (OGL)	3	Handle Technology	249
D-410	Oval rose handle with friction-bearing technology (OGL)	3	Handle Technology	284
D-410	Round rose handle with friction-bearing technology (SGL)	3	Handle Technology	251
D-415	Oval rose handle with friction-bearing technology (OGL)	3	Handle Technology	288
D-490	Round rose handle with ball-bearing technology (OKL)	3	Handle Technology	253
D-510	Round rose handle with ball-bearing technology (OKL)	3	Handle Technology	256
D-510	Round rose handle with friction-bearing technology (OGL)	3	Handle Technology	259
D-510	Project handle with friction-bearing technology (OGL) Short plate (K)	3	Handle Technology	260
D-510	Round rose handle with friction-bearing technology (SGL)	3	Handle Technology	261
D-515	Oval rose handle with friction-bearing technology (OGL)	3	Handle Technology	292
Door stop	Accessories FDC-B	2	Door Closer Technology	178
Drilling templates	Accessories	3	Handle Technology	345
Dual locking device system 1	Accessories FDC-B Dual locking device	4	Door Closer Technology Panic, Lock and Bolting Technology	182 470
Dual locking device system 2	Accessories FDC-B Dual locking device	2 4	Door Closer Technology Panic, Lock and Bolting Technology	182 471

E

ECO Newton TS-14	Door closer with standard arm	2	Door Closer Technology	104
ECO Newton TS-15	Door closer with standard arm	2	Door Closer Technology	96
ECO Newton TS-16	Door closer with standard arm	2	Door Closer Technology	90
ECO Newton TS-20	Door closer with standard arm	2	Door Closer Technology	84
ECO Newton TS-31	Door closer with slide rail	2	Door Closer Technology	58
ECO Newton TS-41	Door closer with slide rail	2	Door Closer Technology	50
ECO Newton TS-50	Door closer with standard arm	2	Door Closer Technology	78
ECO Newton TS-51	Door closer with slide rail	2	Door Closer Technology	44
ECO Newton TS-61	Door closer with slide rail	2	Door Closer Technology	36
EE 1.1HB	Panic set acc. to EN 179	4	Panic, Lock and Bolting Technology	506
EE 1.1HD	Panic set acc. to EN 179	4	Panic, Lock and Bolting Technology	507
EE 1.1HE	Panic set acc. to EN 179	4	Panic, Lock and Bolting Technology	508
Elbow switch	Accessories FDC-B	2	Door Closer Technology	180
EN 1125	Panic door locks with a horizontal activation bar for doors in escape routes	1	Forces	13
EN 1154	Door closing mechanisms with a controlled closing sequence	1	Forces	13
EN 1158	Closing sequence regulators	1	Forces	13
EN 179	Emergency exit locks with handles or impact plates for doors in escape routes	1	Forces	13
EN 1906	Door handles and knobs	1	Forces	13
EN 1935	Single axis door and window hinges	1	Forces	13
(DIN) EN 12209	Mechanically operated locks and strike plates	1	Forces	13
EPN 2000	Panic bar systems	4	Panic, Lock and Bolting Technology	394
EPN 2000 II	Panic bar systems	4	Panic, Lock and Bolting Technology	400

Index

	Product range	Chapter No.	Chapter	Page
EPN 900 II	Panic bar systems	4	Panic, Lock and Bolting Technology	408
EPN 900 III	Panic bar systems	4	Panic, Lock and Bolting Technology	412

F

FDC	Swing-door drive unit	2	Door Closer Technology	150
FH 843 FH 844	Floor spring	2 / 6	Door Closer Technology / Glass Door Technology	146
Finger protection shade	FDC-B Accessories	2	Door Closer Technology	181
Fixing solutions for nylon push-pull handles	Push-pull handles	3	Handle Technology	373
Fixing solutions for push-pull handles Set 1	Push-pull handles	3	Handle Technology	333
Fixing solutions for push-pull handles Set 2	Push-pull handles	3	Handle Technology	333
Fixing solutions for push-pull handles Set 3	Push-pull handles	3	Handle Technology	333
Fixing solutions for push-pull handles Set 4	Push-pull handles	3	Handle Technology	333
Fixing solutions for push-pull handles Set 5	Push-pull handles	3	Handle Technology	333
Flip switch	Accessories FDC-B	2	Door Closer Technology	179
Flip switch	Accessories FDC-B	2	Door Closer Technology	180
Floor clamping device	Accessories	6	Glass Door Technology	619
Floor clamping device	Accessories	6	Glass Door Technology	619
Forces		1	Forces	13
FTS 63	Free-swinging door closer	2	Door Closer Technology	142
FTS 63 R	Free-swinging door closer	2	Door Closer Technology	142
Fullcover	ECO Cover - Accessories	2	Door Closer Technology	163

G

GBS 12	Mortise locks for wooden doors	4	Panic, Lock and Bolting Technology	418
GBS 15	Mortise locks for wooden doors	4	Panic, Lock and Bolting Technology	420
GBS 31	Mortise locks for wooden doors	4	Panic, Lock and Bolting Technology	422
GBS 31 C	Mortise locks for wooden doors	4	Panic, Lock and Bolting Technology	424
GBS 31 E	Mortise locks for wooden doors	4	Panic, Lock and Bolting Technology	426
GBS 36	Mortise locks for wooden doors	4	Panic, Lock and Bolting Technology	428
GBS 38	Mortise locks for wooden doors	4	Panic, Lock and Bolting Technology	430
GBS 39	Mortise locks for wooden doors	4	Panic, Lock and Bolting Technology	432
GBS 60	Mortise locks for profile frame doors with roller latch	4	Panic, Lock and Bolting Technology	434
GBS 70	Mortise locks single-leaf profile frame doors	4	Panic, Lock and Bolting Technology	438
GBS 71	Mortise lock for fire-proof doors for single-leaf profile frame doors	4	Panic, Lock and Bolting Technology	440
GBS 71	Panic locks for single-leaf profile frame doors	4	Panic, Lock and Bolting Technology	440
GBS 72	Mortise lock for fire-proof doors for double-leaf profile frame doors	4	Panic, Lock and Bolting Technology	442
GBS 72	Panic locks for double-leaf doors profile frame doors	4	Panic, Lock and Bolting Technology	442
GBS 73	Mortise lock for fire-proof doors for double-leaf profile frame doors	4	Panic, Lock and Bolting Technology	444
GBS 73	Panic locks for double-leaf doors profile frame doors	4	Panic, Lock and Bolting Technology	444
GBS 76	Mortise lock for fire-proof, double-leaf profile frame doors	4	Panic, Lock and Bolting Technology	446
GBS 76	Mortise lock for fire-proof, single-leaf profile frame doors	4	Panic, Lock and Bolting Technology	446
GBS 76	Panic locks for double-leaf profile frame doors	4	Panic, Lock and Bolting Technology	446

Swissdoor ApS • Stenhuggervej 2 • 5471 Søndersø • Danmark Telefon +45 86 28 00 00 • mail@swissdoor.dk • www.swissdoor.dk

Index

	Product range	Chapter No.	Chapter	Page
GBS 76	Panic locks for single-leaf profile frame doors	4	Panic, Lock and Bolting Technology	446
GBS 81	Mortise lock for fire-proof, wooden and metal doors	4	Panic, Lock and Bolting Technology	448
GBS 81	Panic locks for single-leaf wooden and metal doors	4	Panic, Lock and Bolting Technology	448
GBS 82	Mortise lock for fire-proof, wooden and metal doors	4	Panic, Lock and Bolting Technology	450
GBS 82	Panic locks for single-leaf, wooden and metal doors	4	Panic, Lock and Bolting Technology	450
GBS 83	Panic locks for double-leaf wooden and metal doors	4	Panic, Lock and Bolting Technology	452
GBS 83	Panic locks for single-leaf, wooden and metal doors	4	Panic, Lock and Bolting Technology	452
GBS 84	Panic locks for double-leaf wooden and metal doors	4	Panic, Lock and Bolting Technology	453
GBS 90	Panic locks for single-leaf wooden and metal doors	4	Panic, Lock and Bolting Technology	454
GBS 91	Panic locks for single-leaf wooden and metal doors	4	Panic, Lock and Bolting Technology	456
GBS 92	Panic locks for single-leaf wooden and metal doors	4	Panic, Lock and Bolting Technology	458
GBS 93	Panic locks for double-leaf wooden and metal doors	4	Panic, Lock and Bolting Technology	460
GBS 94	Panic locks for double-leaf wooden and metal doors	4	Panic, Lock and Bolting Technology	462
GBS 96	Panic locks for single-leaf profile frame doors	4	Panic, Lock and Bolting Technology	464
GBS 97	Panic locks for double-leaf doors profile frame doors	4	Panic, Lock and Bolting Technology	466
GBS 98	Panic locks for double-leaf doors profile frame doors	4	Panic, Lock and Bolting Technology	468
GENIUS LHA	Laser-welded steel hinges	5	Hinge Technology	549
GF-0100	Glass patch fittings for solid glass doors Bottom patch	6	Glass Door Technology	614
GF-0200	Glass patch fittings for solid glass doors Top patch	6	Glass Door Technology	614
GF-0300	Glass patch fittings for solid glass doors Overpanel patch	6	Glass Door Technology	615
GF-0400	Glass patch fittings for solid glass doors Overpanel & side patch	6	Glass Door Technology	615
GF-0500	Glass patch fittings for solid glass doors Patch lock	6	Glass Door Technology	615
Glass clamping device	Accessories	2 / 6	Door Closer Technology / Glass Door Technology	166

H

Handle sets for bathroom doors and sanitary partitions	Aluminium	3	Handle Technology	352
Handle sets for bathroom doors and sanitary partitions	Knob / Knob sets	3	Handle Technology	358
Handle sets for bathroom doors and sanitary partitions	Nylon	3	Handle Technology	350
Handle sets for bathroom doors and sanitary partitions	Stainless steel	3	Handle Technology	356
Hasp-type lock	Locks for bathroom doors and sanitary partitions	3	Handle Technology	362
Hat and coat hook made of nylon	Accessories	3	Handle Technology	371
Hinges for sanitary partitions	Nylon (spring) hinge 24 / 21 With bare lug on side	3	Handle Technology	367
Hinges for sanitary partitions	Nylon (spring) hinge 24 / 28	3	Handle Technology	367
Hinges for sanitary partitions	Nylon (spring) hinge 24 / 28 for sanitary partitions	3	Handle Technology	366
Hinges for sanitary partitions	Nylon hinge 24 / 21	3	Handle Technology	364
Hinges for sanitary partitions	Nylon hinge 24 / 28	3	Handle Technology	365
Hinges for sanitary partitions	Nylon hinge 24 / 28 for rising doors	3	Handle Technology	368
Hold-open arm	Accessories	2	Door Closer Technology	164
Hook made of nylon with bumper	Accessories	3	Handle Technology	370

Index

	Product range	Chapter No.	Chapter	Page
I				
Interrupt button HAT 2 AP/UP	Accessories FDC-B	2	Door Closer Technology	179
Interrupt button in-wall mounted	Accessories for combination with ECO hold-open devices Außer ITS / FTS	2	Door Closer Technology	170
Interrupt button surface mounted	Accessories for combination with ECO hold-open devices Außer ITS / FTS	2	Door Closer Technology	170
ITS Multi-Genius	Integrated door closer	2	Door Closer Technology	110
K				
K-130	Accessories knobs OGL with M12 thread	3	Handle Technology	330
K-135	Accessories knobs OKL with M12 thread	3	Handle Technology	330
K-135	Accessories knobs OKL with M8 thread	3	Handle Technology	330
K-165	Accessories knobs OGL with M12 thread	3	Handle Technology	330
Key sense switch	Accessories FDC-B	2	Door Closer Technology	179
Knob made of nylon with or without protection bumper	Accessories	3	Handle Technology	370
Lifting lug	OBX-6012	5	Hinge Technology	580
Lock set	Locks for bathroom doors and sanitary partitions	3	Handle Technology	361
Locks for bathroom doors and sanitary partitions	Lock set	3	Handle Technology	361
Locks for bathroom doors and sanitary partitions	Mortise dead lock	3	Handle Technology	360
Locks for bathroom doors and sanitary partitions	Hasp-type lock	3	Handle Technology	362
M				
Magnetic clamps	Accessories for combination with ECO hold-open devices	2	Door Closer Technology	175
Magnetic clamps	Accessories for combination with ECO hold-open devices Außer ITS / FTS	2	Door Closer Technology	171
Magnetic clamps	Accessories for combination with ECO hold-open devices ITS / FTS	2	Door Closer Technology	175
Mortise dead lock	Locks for bathroom doors and sanitary partitions	3	Handle Technology	360
Mounting base	Accessories combination with hold-open devices ITS / FTS	2	Door Closer Technology	174
Mounting base	Accessories for combination with swing-door drive unit	2	Door Closer Technology	178
Mounting plate	Accessories	2	Door Closer Technology	162
Multi-Genius (EN 1 - 4; EN 2 - 5)	Concealed / surface-mounted door closer	2	Door Closer Technology	110
N				
Newton TS-14	Door closer with standard arm	2	Door Closer Technology	104
Newton TS-15	Door closer with standard arm	2	Door Closer Technology	96
Newton TS-16	Door closer with standard arm	2	Door Closer Technology	90
Newton TS-20	Door closer with standard arm	2	Door Closer Technology	84
Newton TS-31	Door closer with slide rail	2	Door Closer Technology	58
Newton TS-41	Door closer with slide rail	2	Door Closer Technology	50
Newton TS-50	Door closer with standard arm	2	Door Closer Technology	78
Newton TS-51	Door closer with slide rail	2	Door Closer Technology	44
Newton TS-61	Door closer with slide rail	2	Door Closer Technology	36
Nylon (spring) hinge 24 / 21	Hinges for sanitary partitions with bare lug on one side	3	Handle Technology	369
Nylon (spring) hinge 24 / 28	Hinges for sanitary partitions	3	Handle Technology	367
Nylon (spring) hinge 24 / 28	Hinges for sanitary partitions with wraparound profile	3	Handle Technology	366
Nylon hinge 24 / 21	Hinges for sanitary partitions	3	Handle Technology	364
Nylon hinge 24 / 28	Hinges for sanitary partitions	3	Handle Technology	365
Nylon hinge 24 / 28	Hinges for sanitary partitions for rising doors	3	Handle Technology	368
O				
OBN 18-4141	Project hinges OBN 18 for unrebated notch	5	Handle Technology	566
OBN 18-4141 round	Project hinges OBN 18 for unrebated notch	5	Hinge Technology	568
OBN 18-4141 square	Project hinges OBN 18 for unrebated notch	5	Hinge Technology	570
OBN 20-4141	Project hinges OBN 20 for unrebated notch	5	Hinge Technology	564
OBX-20 1531	Project hinges OBX 20 for rebated notch	5	Hinge Technology	530
OBX-3001-3D	Reception element for upright standing pillar	5	Hinge Technology	574
OBX-3002-3D	Reception element for lining frame	5	Hinge Technology	575
OBX-3011-3D	Reception element for steel frame with welding points	5	Hinge Technology	576

Swissdoor ApS • Stenhuggervej 2 • 5471 Søndersø • Danmark Telefon +45 86 28 00 00 • mail@swissdoor.dk • www.swissdoor.dk

Index

	Product range	Chapter No.	Chapter	Page
OBX-3012-3D	Reception element for steel frame without welding points	5	Hinge Technology	576
OBX-3021-3D	Reception element for aluminium frame	5	Hinge Technology	577
OBX-3096	Cover plates square - square	5	Hinge Technology	578
OBX-3097	Cover plates square - round	5	Hinge Technology	578
OBX-3098	Cover plates round - round	5	Hinge Technology	579
OBX-3099	Cover plates round - square	5	Hinge Technology	579
OBX-6012	Lifting lug	5	Hinge Technology	580
OBX 18-1531	Project hinges OBX 18 for rebated notch	5	Hinge Technology	552
OBX 18-1532 FD	Project hinges OBX 18 for rebated notch with leaf gasket	5	Hinge Technology	556
OBX 18-2541	Project hinges OBX 18 for unrebated notch	5	Hinge Technology	558
OBX 20-1532 FD	Project hinges OBX 20 for rebated notch with leaf gasket	5	Hinge Technology	534
OBX 20-1951	Project hinges OBX 20 for rebated notch	5	Hinge Technology	538
OBX 20-2541	Project hinges OBX 20 for unrebated notch	5	Hinge Technology	542
OBX 20-2541	Project hinges OBX 20 for unrebated notch with			

P

Panic flap	Accessories hold-open arm, standard arm, panic flap	2	Door Closer Technology	164
Panic pin set (9 mm)	Accessories	4	Panic, Lock and Bolting Technology	512
Panic pin set (9 mm)	Square pins	3	Handle Technology	339
Spare toilet roll holder made of nylon	Accessories	3	Handle Technology	375
Partition-foot element made of nylon	Accessories	3	Handle Technology	374
PE 1.1PB	Panic set acc. to EN 1125 for single-leaf wooden and metal doors	4	Panic, Lock and Bolting Technology	488
PE 1.1PD	Panic set acc. to EN 1125 for single-leaf wooden and metal doors	4	Panic, Lock and Bolting Technology	489
PE 1.1PE	Panic set acc. to EN 1125 for single-leaf wooden and metal doors	4	Panic, Lock and Bolting Technology	490
PE 1.1TB	Panic set acc. to EN 1125 for single-leaf wooden and metal doors	4	Panic, Lock and Bolting Technology	491
PE 1.1TD	Panic set acc. to EN 1125 for single-leaf wooden and metal doors	4	Panic, Lock and Bolting Technology	492
PE 1.1TE	Panic set acc. to EN 1125 for single-leaf wooden and metal doors	4	Panic, Lock and Bolting Technology	493
PE 2.2PB	Panic set acc. to EN 1125 double-leaf wooden and metal doors	4	Panic, Lock and Bolting Technology	482
PE 2.2PD	Panic set acc. to EN 1125 double-leaf wooden and metal doors	4	Panic, Lock and Bolting Technology	483
PE 2.2PE	Panic set acc. to EN 1125 double-leaf wooden and metal doors	4	Panic, Lock and Bolting Technology	484
PE 2.2TB	Panic set acc. to EN 1125 double-leaf wooden and metal doors	4	Panic, Lock and Bolting Technology	485
PE 2.2TD	Panic set acc. to EN 1125 double-leaf wooden and metal doors	4	Panic, Lock and Bolting Technology	486
PE 2.2TE	Panic set acc. to EN 1125 double-leaf wooden and metal doors	4	Panic, Lock and Bolting Technology	487
PEE1.1HB	Panic set acc. to EN 179 for single-leaf profile frame doors for emergency exits	4	Panic, Lock and Bolting Technology	506
PEE1.1HD	Panic set acc. to EN 179 for single-leaf profile frame doors for emergency exits	4	Panic, Lock and Bolting Technology	507
PEE1.1HE	Panic set acc. to EN 179 for single-leaf profile frame doors for emergency exits	4	Panic, Lock and Bolting Technology	508
Pivot hinge	Accessories	2	Door Closer Technology	169
Pop rivet nut for oval rose counter handles	Accessories	3	Handle Technology	343
Power supply	Accessories for combination with ECO hold-open devices except ITS / FTS	2	Door Closer Technology	173
PPE 1.1 PB	Panic set acc. to EN 1125 for single-leaf profile frame doors	4	Panic, Lock and Bolting Technology	500
PPE 1.1PD	Panic set acc. to EN 1125 for single-leaf profile frame doors	4	Panic, Lock and Bolting Technology	501
PPE 1.1PE	Panic set acc. to EN 1125 for single-leaf profile frame doors	4	Panic, Lock and Bolting Technology	502
PPE 1.1TB	Panic set acc. to EN 1125 for single-leaf profile frame doors	4	Panic, Lock and Bolting Technology	503
PPE 1.1TD	Panic set acc. to EN 1125 for single-leaf profile frame doors	4	Panic, Lock and Bolting Technology	504
PPE 1.1TE	Panic set acc. to EN 1125 for single-leaf profile frame doors	4	Panic, Lock and Bolting Technology	505

Index

	Product range	Chapter No.	Chapter	Page
PPE 2.2PB	Panic set acc. to EN 1125 for double-leaf profile frame doors	4	Panic, Lock and Bolting Technology	494
PPE 2.2PD	Panic set acc. to EN 1125 for double-leaf profile frame doors	4	Panic, Lock and Bolting Technology	495
PPE 2.2PE	Panic set acc. to EN 1125 for double-leaf profile frame doors	4	Panic, Lock and Bolting Technology	496
PPE 2.2TB	Panic set acc. to EN 1125 for double-leaf profile frame doors	4	Panic, Lock and Bolting Technology	497
PPE 2.2TD	Panic set acc. to EN 1125 for double-leaf profile frame doors	4	Panic, Lock and Bolting Technology	498
PPE 2.2TE	Panic set acc. to EN 1125 for double-leaf profile frame doors	4	Panic, Lock and Bolting Technology	499
Product liability	Product liability	7	Conditions of sale, Care Notes, Index	636
Push-pull handle cranked	Push-pull handles	3	Handle Technology	334
Push-pull handle semi-circular	Push-pull handles	3	Handle Technology	334
Push-pull handles made of nylon	Accessories	3	Handle Technology	372
Push-pull handle straight	Push-pull handles	3	Handle Technology	334
Push-pull handle triangular	Push-pull handles	3	Handle Technology	334
PZ lock	Locks	6	Glass Door Technology	604

R

Radar 1000	Accessories FDC-B	2	Door Closer Technology	180
Radar Merkur	Accessories FDC-B	2	Door Closer Technology	180
Reception element for aluminium frame	OBX-3021-3D	5	Hinge Technology	577
Reception element for lining frame	OBX-3002-3D	5	Hinge Technology	575
Reception element for steel frame with welding	OBX-3011-3D	5	Hinge Technology	576
Reception element for steel frame without welding	OBX-3012-3D	5	Hinge Technology	576
Reception element for upright standing pillar frame	OBX-3001-3D	5	Hinge Technology	574

S

Sanitary partitions	Colours	3	Handle Technology	377
Screw set for plates (VDS)	Accessories	3	Handle Technology	343
Screw set for plates / roses	Accessories	3	Handle Technology	343
Security roses	Security handle set	3	Handle Technology	331,332
Sensor strip	Accessories FDC-B	2	Door Closer Technology	181
Set of back plate UG (blind)	Accessories	3	Handle Technology	342
Set of back plate with BB-hole	Accessories	3	Handle Technology	342
Set of back plate with PZ-hole	Accessories	3	Handle Technology	342
Set of WC	Accessories	3	Handle Technology	342
Short plate (K)	Project handle with friction-bearing technology (OGL) Short plate (K)	3	Handle Technology	331
Short plate (K) PZ	Project handle with friction-bearing technology (OGL) Shortplate (K)	3	Handle Technology	331
Sleeve nut	Accessories	3	Handle Technology	344
Slide rail B-FKL	Slide rails for single-leaf doors	2	Door Closer Technology	67
Slide rail B	Slide rails for single-leaf doors	2	Door Closer Technology	67
Slide rail EFR	Slide rails for single-leaf doors	2	Door Closer Technology	68
Slide rail EF	Slide rails for single-leaf doors	2	Door Closer Technology	68
Slide rail ITS-EF	Concealed slide rails for single-leaf doors	2	Door Closer Technology	138
Slide rail ITS-EF	Concealed slide rails for single-leaf doors	2	Door Closer Technology	138
Slide rail ITS-MFA	Concealed slide rails for single-leaf doors	2	Door Closer Technology	137
Slide rail ITS-MFA	Concealed slide rails for single-leaf doors	2	Door Closer Technology	137
Slide rail ITS-SR-EF	Concealed slide rails for double-leaf doors	2	Door Closer Technology	139
Slide rail ITS-SR-EF	Concealed slide rails for double-leaf doors	2	Door Closer Technology	139
Slide rail ITS-SR	Concealed slide rails for double-leaf doors	2	Door Closer Technology	139
Slide rail ITS-SR	Concealed slide rails for double-leaf doors	2	Door Closer Technology	139
Slide rail ITS	Concealed slide rails for single-leaf doors	2	Door Closer Technology	137
Slide rail ITS	Concealed slide rails for single-leaf doors	2	Door Closer Technology	137
Slide rail K	Slide rails for single-leaf doors	2	Door Closer Technology	67
Slide rail SR-BG	Slide rails for double-leaf doors	2	Door Closer Technology	70
Slide rail SR-EF-1G	Slide rails for double-leaf doors	2	Door Closer Technology	71
Slide rail SR-EF-1S	Slide rails for double-leaf doors	2	Door Closer Technology	72

Swissdoor ApS • Stenhuggervej 2 • 5471 Søndersø • Danmark Telefon +45 86 28 00 00 • mail@swissdoor.dk • www.swissdoor.dk

Index

	Product range	Chapter No.	Chapter	Page
Slide rail SR-EF-2	Slide rails for double-leaf doors	2	Door Closer Technology	73
Slide rail SR-EFR-1G	Slide rails for double-leaf doors with integrated smoke detector	2	Door Closer Technology	74
Slide rail SR-EFR-1S	Slide rails for double-leaf doors with integrated smoke detector	2	Door Closer Technology	75
Slide rail SR-EFR-2	Slide rails for double-leaf doors with integrated smoke detector	2	Door Closer Technology	76
Slide rail SR	Slide rails for double-leaf doors	2	Door Closer Technology	69
Smoke detector	Accessories for combination with ECO hold-open devices	2	Door Closer Technology	173
Smoke switch	Accessories for combination with ECO hold-open devices	2	Door Closer Technology	173
Spare toilet roll holder made of nylon	Accessories	3	Handle Technology	375
Spreaded spindle pin (10 mm)	Spindle pins	3	Handle Technology	338
Spreaded spindle pin (8 mm)	Spindle pins	3	Handle Technology	338
Spreaded spindle pin (9 mm)	Spindle pins	3	Handle Technology	338
Spindle pin (10 mm)	Spindle pins	3	Handle Technology	340
Spindle pin (6 mm)	Spindle pins	3	Handle Technology	340
Spindle pin (9 mm) for EPN 2000 and EPN 2000 II	Accessories	4	Panic, Lock and Bolting Technology	514
Spindle pin (9 mm) for EPN 900 II and 900 III	Accessories	4	Panic, Lock and Bolting Technology	514
Spindle pin (9 mm)	Spindle pins	3	Handle Technology	340
Spindle pin for knob/lever set with excentric drilling (10 mm)	Spindle pins	3	Handle Technology	341
Spindle pin for knob/lever set with excentric drilling (8 mm)	Spindle pins	3	Handle Technology	341
Spindle pin for knob/lever set with excentric drilling (9 mm)	Spindle pins	3	Handle Technology	341
Spindle pin standard 10 mm	Spindle pins	3	Handle Technology	336
Spindle pin standard 8,5 mm	Spindle pins	3	Handle Technology	336
Spindle pin standard 8 mm	Spindle pins	3	Handle Technology	336
Spindle pin standard 9 mm	Spindle pins	3	Handle Technology	336
Spindle pin with clamp	Accessories	3	Handle Technology	342
Spindle pin with excentric drilling (8 mm)	Spindle pins	3	Handle Technology	337
Spindle pin with excentric drilling (9 mm)	Spindle pins	3	Handle Technology	337
Standard arm	Accessory - hold-open arm, standard arm, panic flap	2	Door Closer Technology	164
Studio Basic / Studio Design	Frame part for two-part glass door hinges	6	Glass Door Technology	620
Studio Basic	Hinges	6	Glass Door Technology	606
Studio Basic Set	Glass door fittings	6	Glass Door Technology	598
Studio D-110	Lever sets	6	Glass Door Technology	612
Studio D-310	Lever sets	6	Glass Door Technology	612
Studio D-410	Lever sets	6	Glass Door Technology	613
Studio D-730	Lever sets	6	Glass Door Technology	613
Studio Design	Hinges	6	Glass Door Technology	606
Studio Design Set	Glass door fittings	6	Glass Door Technology	600
Studio Office aluminium frame	Frame part for three-part glass door hinges	6	Glass Door Technology	626
Studio Office	Hinges	6	Glass Door Technology	606
Studio Office wodden frame	Frame part for three-part glass door hinges	6	Glass Door Technology	621
Studio Office lining frame	Frame part for three-part glass door hinges	6	Glass Door Technology	623
Studio Office lining frame	Frame part for three-part glass door hinges	6	Glass Door Technology	624
Studio Office Set	Glass door fittings	6	Glass Door Technology	602
Studio Office steel frame	Frame part for three-part glass door hinges	6	Glass Door Technology	625

T

Test gas 918/5	Accessories for combination with ITS / FTS	2	Door Closer Technology	177
TS-14	ECO Newton Door closer with standard arm	2	Door Closer Technology	104
TS-15	ECO Newton Door closer with standard arm	2	Door Closer Technology	96
TS-16	ECO Newton Door closer with standard arm	2	Door Closer Technology	90
TS-20	ECO Newton Door closer with standard arm	2	Door Closer Technology	84
TS-31	ECO Newton Door closer with slide rail	2	Door Closer Technology	58
TS-41	ECO Newton Door closer with slide rail	2	Door Closer Technology	50
TS-50	ECO Newton Door closer with standard arm	2	Door Closer Technology	78
TS-51	ECO Newton Door closer with slide rail	2	Door Closer Technology	44
TS-61	ECO Newton Door closer with slide rail	2	Door Closer Technology	36

Index

	Product range	Chapter No.	Chapter	Page
U				
Under-lintel angle	Accessories	2	Door Closer Technology	165
UV lock	Locks	6	Glass Door Technology	604
W				
WC brush set	Accessories	3	Handle Technology	376
WC handle sets for bathroom doors and sanitary partitions	Aluminium	3	Handle Technology	352
WC handle sets for bathroom doors and sanitary partitions	Knob / knob sets	3	Handle Technology	358
WC handle sets for bathroom doors and sanitary partitions	Nylon	3	Handle Technology	350
WC handle sets for bathroom doors and sanitary partitions	Stainless steel	3	Handle Technology	356
WS 46	Door stop for walls	3	Handle Technology	333
WS 76	Door stop for walls	3	Handle Technology	333

Swissdoor ApS • Stenhuggervej 2 • 5471 Søndersø • Danmark Telefon +45 86 28 00 00 • mail@swissdoor.dk • www.swissdoor.dk

SWiSSDOOR
DØRTEKNIK FOR PROFESSIONELLE

ECO Schulte GmbH & Co. KG
Iserlohner Landstraße 89
D-58706 Menden

Telefon: +49 2373/92 76-0
Fax: +49 2373/92 76-40

info@eco-schulte.de
www.eco-schulte.de

© ECO Schulte GmbH & Co. KG - Subject to change